Assembly Instruction

RECTANGULAR TEAK DINING TABLE

A	B	C	D
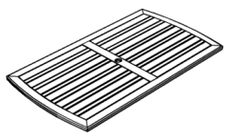	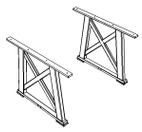		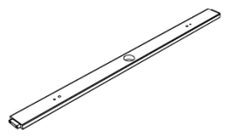
1 x	2 x	2 x	1 x

E	F	G	H
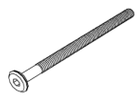 90 mm	 30 mm		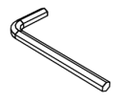
4 x	12 x	4 x	1 x

1

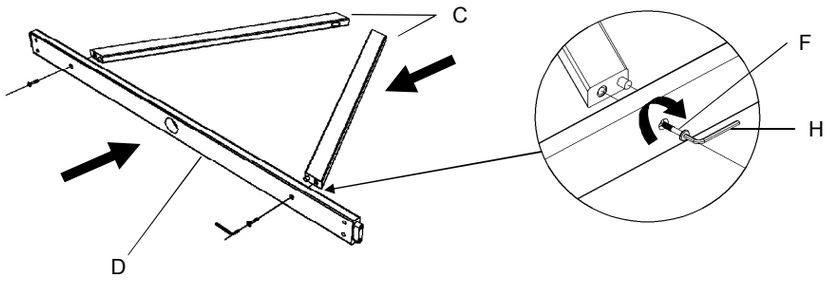

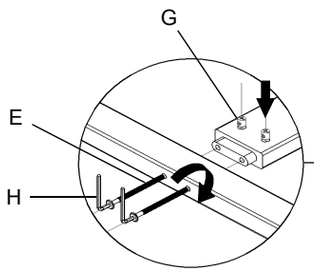

2

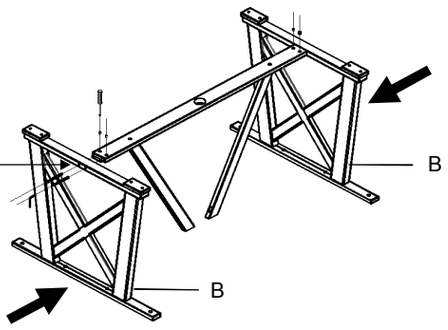

3

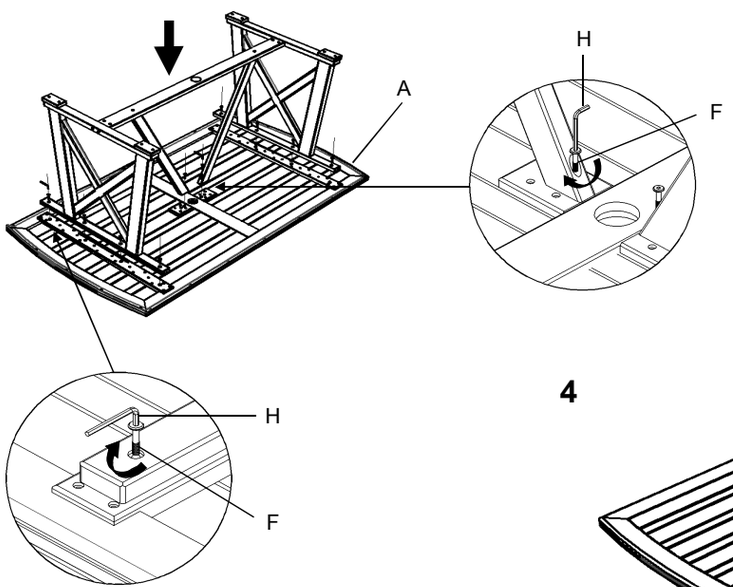

4

