Dear Customer

Thank you for your order. We hope that you have received your furniture in the pristine condition that we sent it out in.

In the unfortunate event that your order was mishandled during transit, please contact us to let us know the extent of the damages so we can resolve for you as soon as possible.

If replacement parts are required, please email us with images and the part number referenced in this manual and we will have a replacement sent out right away.

Please include the full name and postcode used to place the order in your email so we can locate your order in our systems.

The Customer Satisfaction Team

ASSEMBLING INSTRUCTIONS

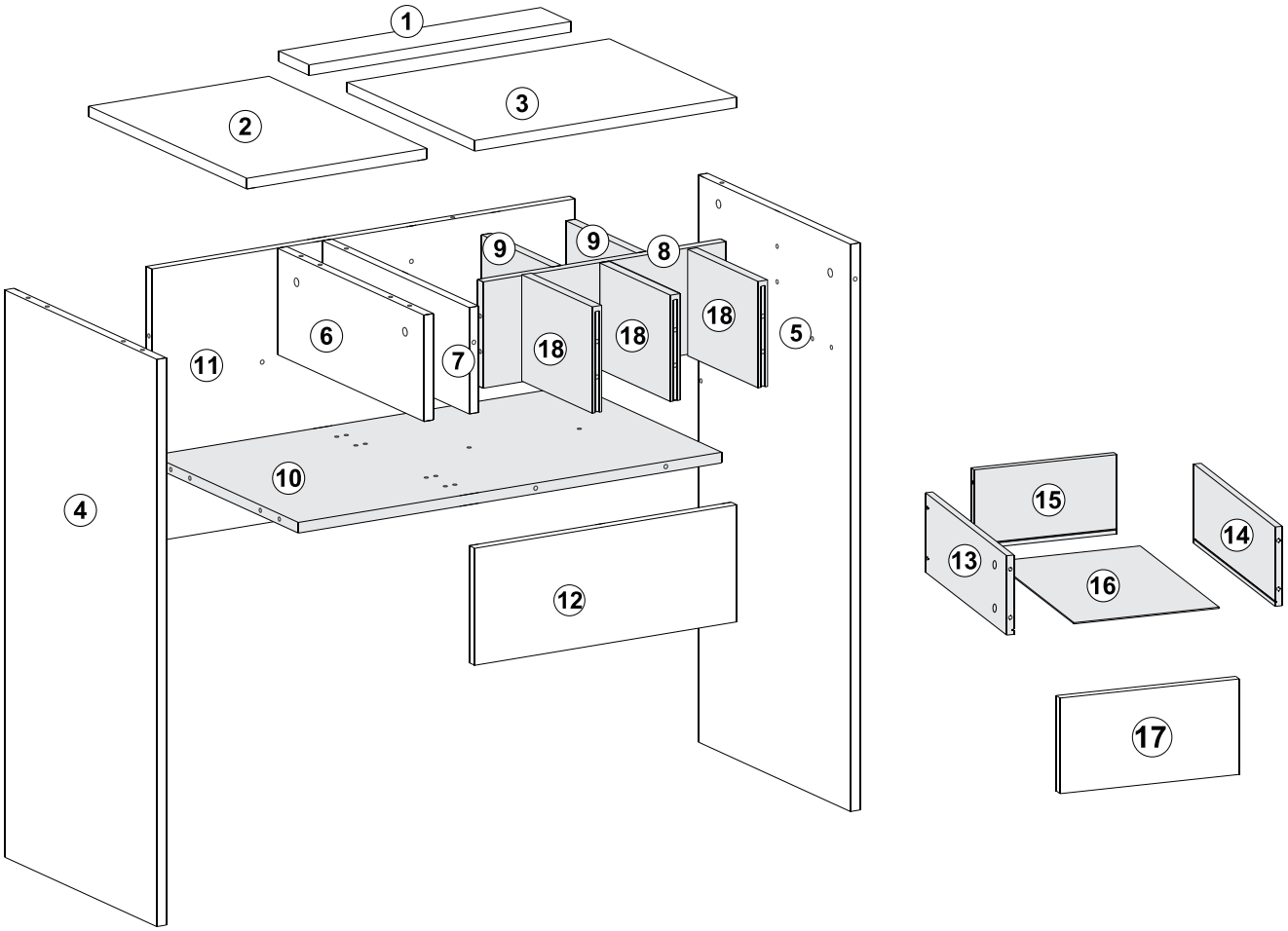

P1			23 PCS
P2			23 PCS
P3		M4X35mm	16 PCS
P4	P4B P4C P4A		1 SET
P5		M3.5X12mm	15 PCS
P6	CL DL DR CR		1 SET
P7			2 PCS
P8			4 PCS
P9			1 PC
P10			12 PCS
P11		M3.5X14mm	13 PCS
P12		M5.8x30mm	30 PCS

1

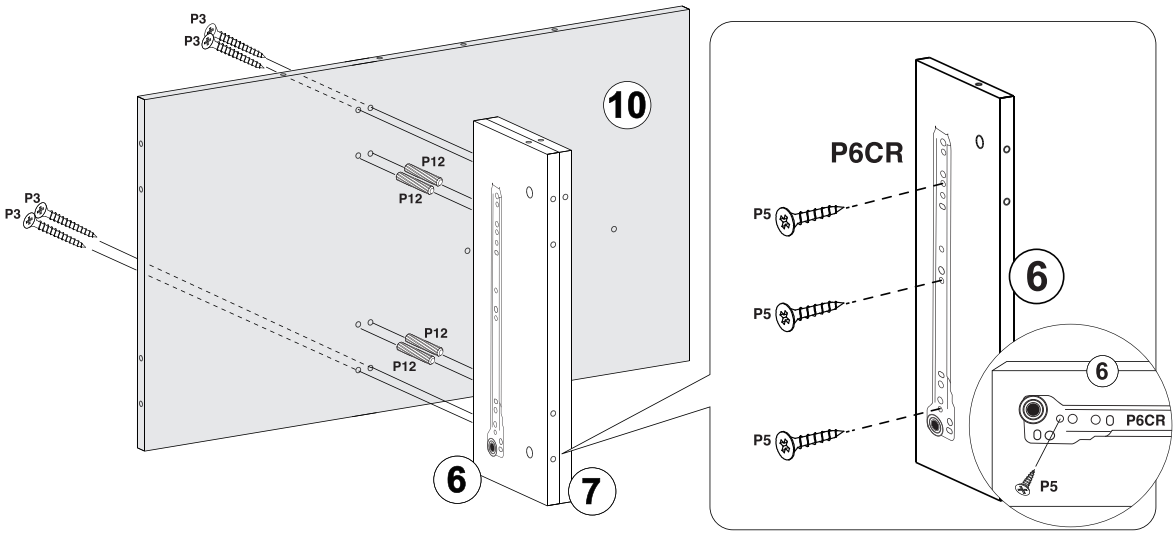
P3
P3
P3
P3
P12
P12
P12
P12
10
6
7
P6CR
P5
P5
P5
6
6
P6CR
P5

2

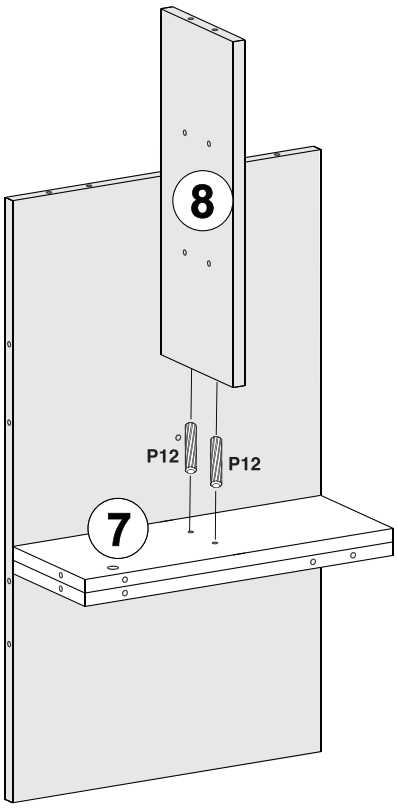
8
P12
P12
7

3

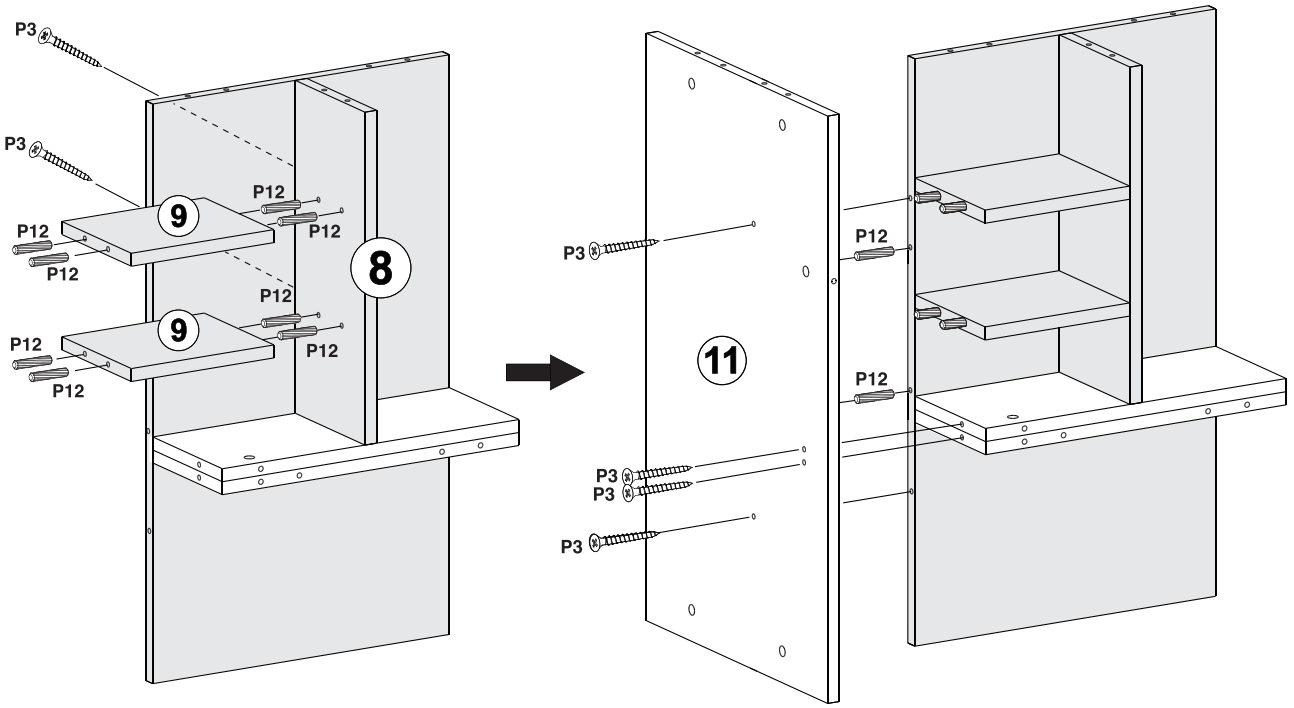
P3
P3
P12
P12
P12
9
P12
P12
8
P12
P12
P12
9
P12
P3
11
P12
P12
P3
P3
P3

4

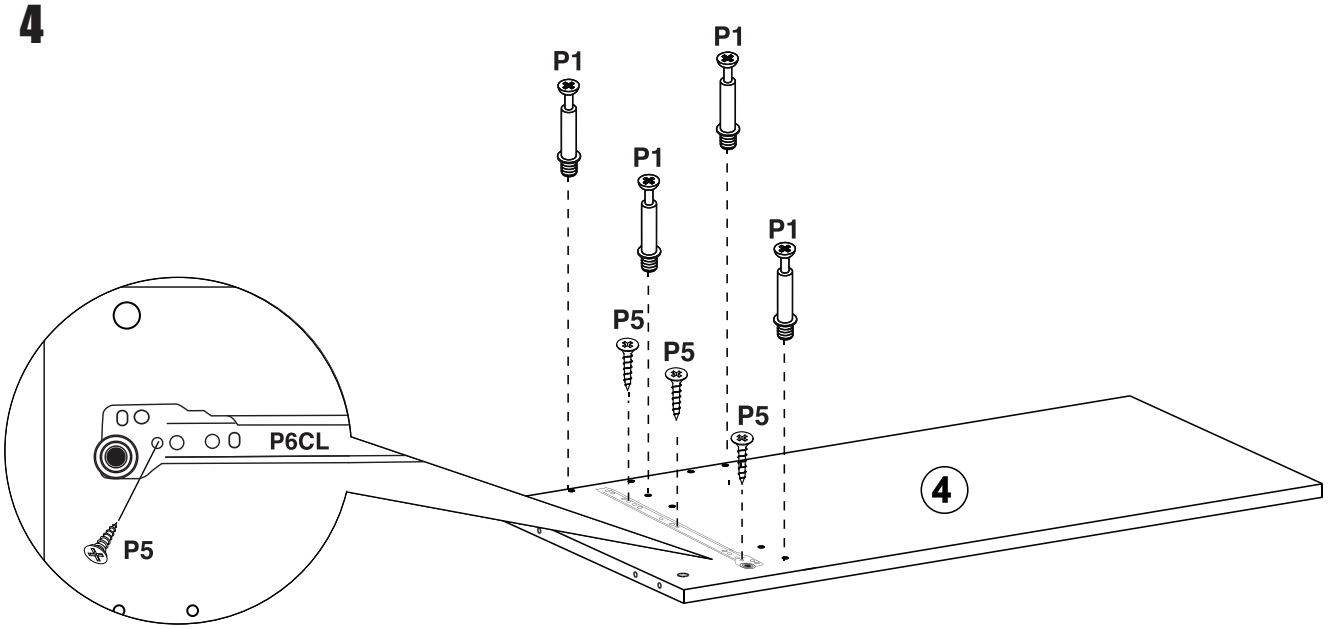
P1
P1
P1
P1
P5
P5
P5
P6CL
P5
4

5

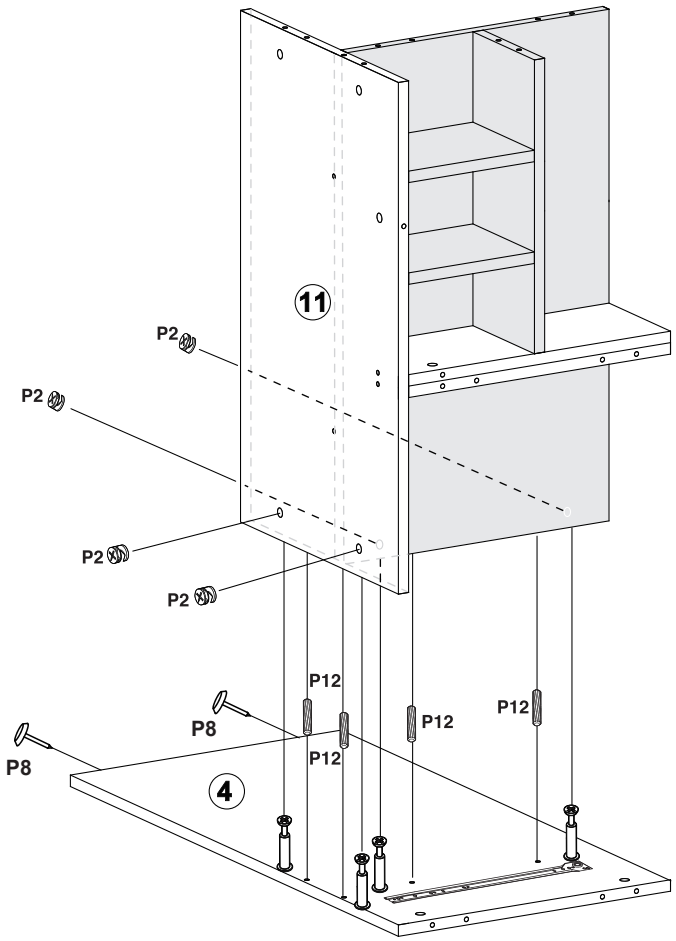
11
P2
P2
P2
P2
P12
P12
P12
P12
P8
P8
4

6

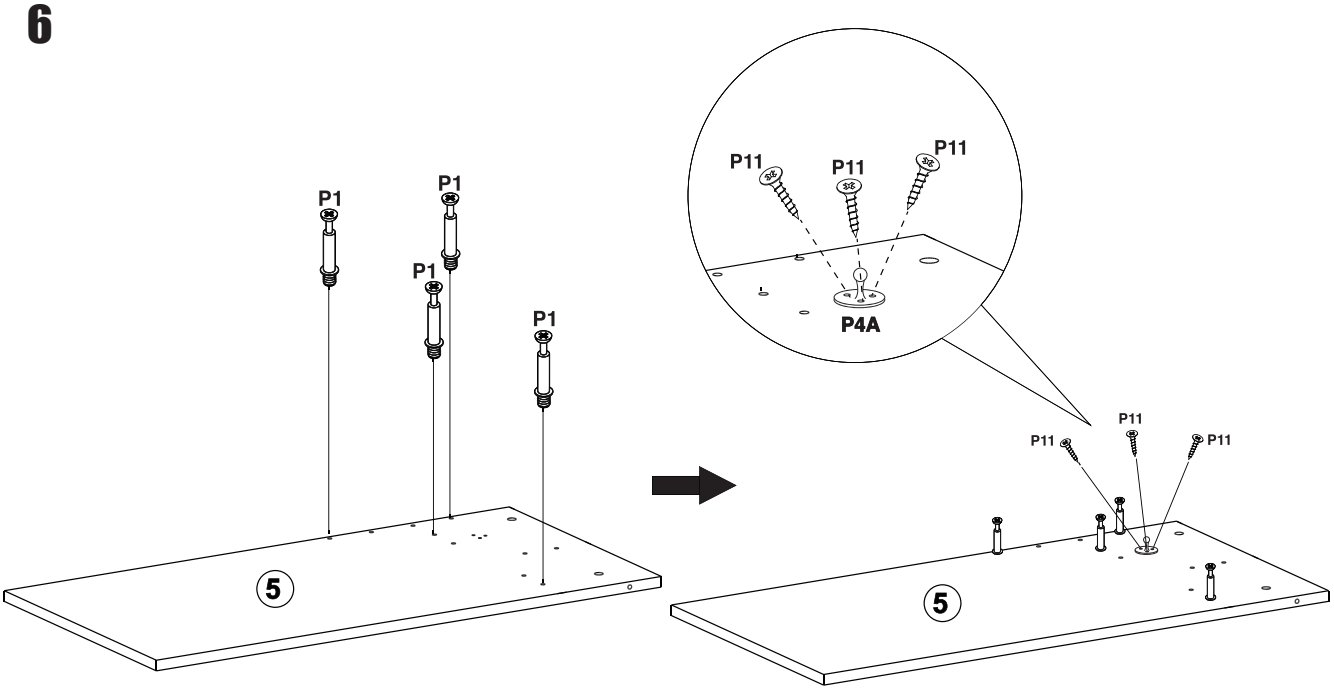
P1
P1
P1
P1
5
P11
P11
P11
P4A
P11
P11
P11
5

7

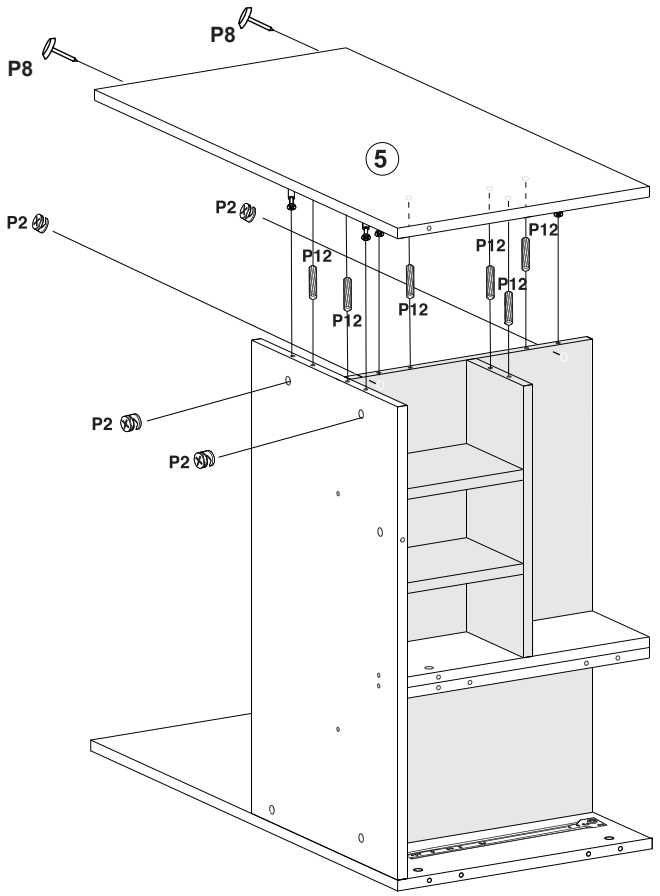
P8
P8
5
P2
P2
P12
P12
P12
P12
P12
P12
P2
P2

8

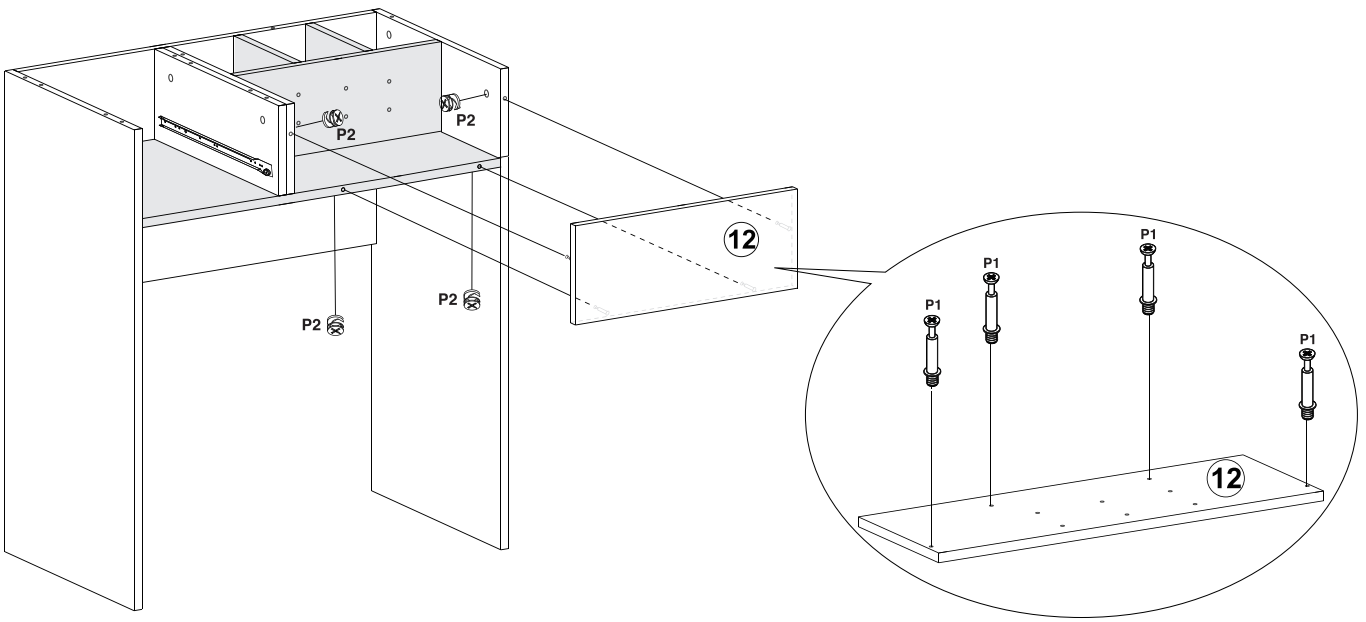
P2
P2
P2
P2
12
P1
P1
P1
P1
12

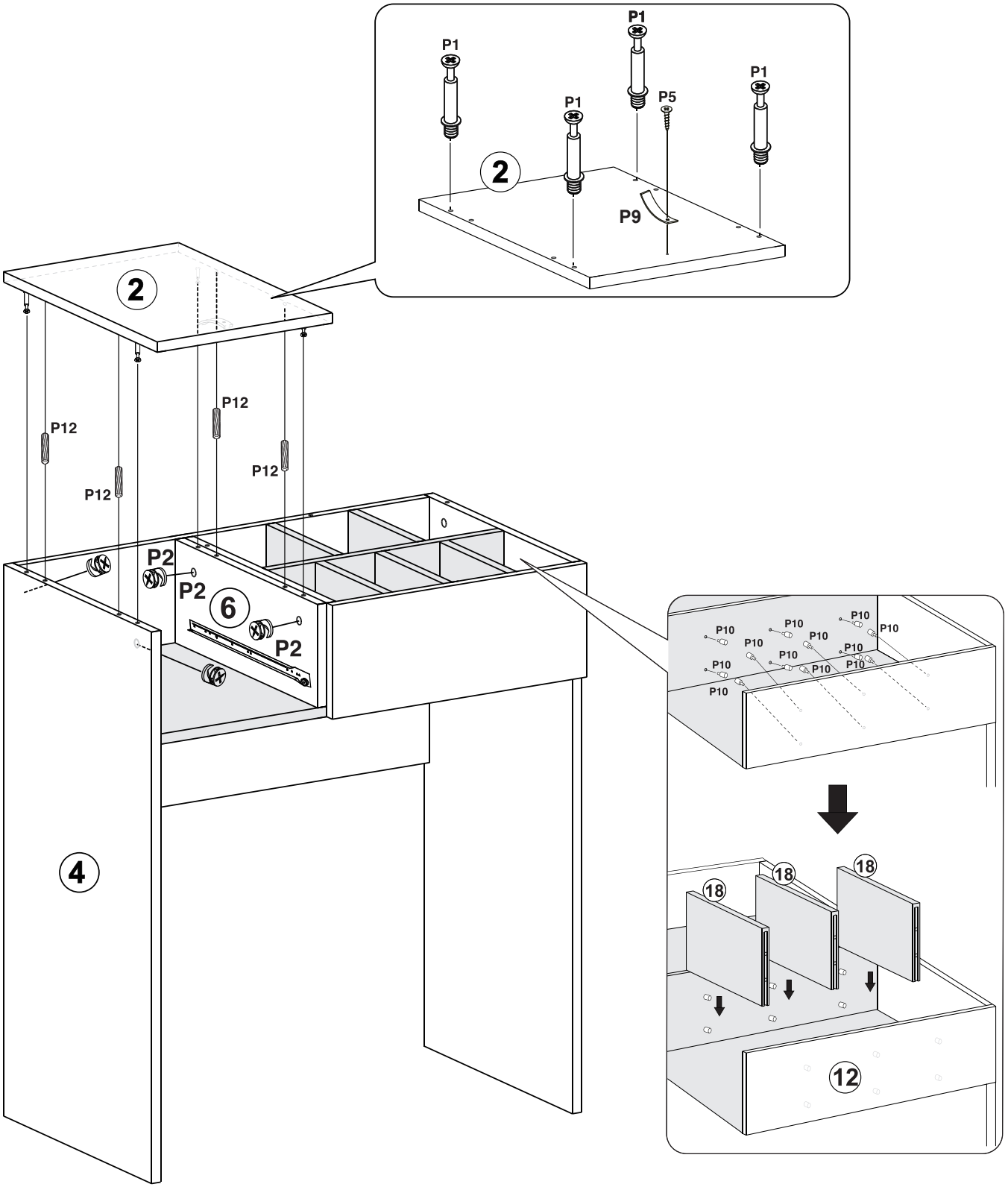
P1
P1
P1
P1
P5
2
P9
2
P12
P12
P12
P12
P2
P2
6
P2
4
P10
P10
P10
P10
P10
P10
P10
P10
P10
P10
P10
P10
18
18
18
12

Option 1

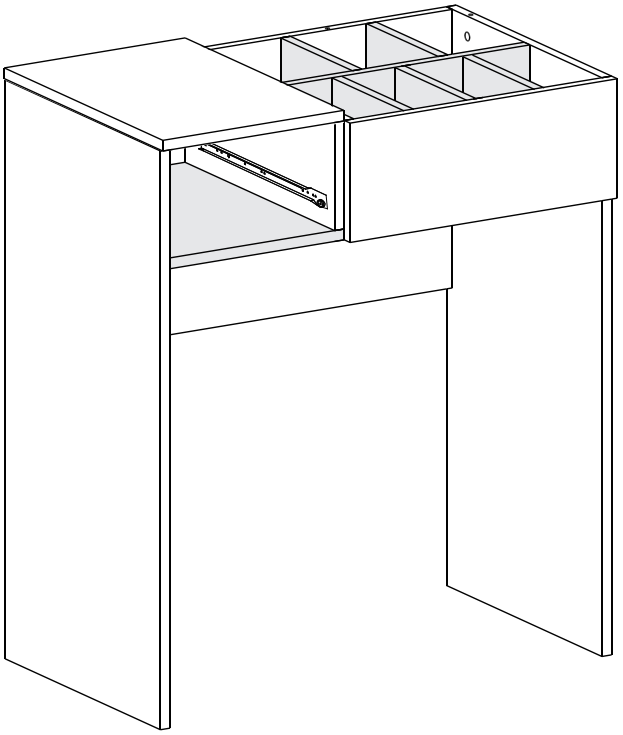

Option 4

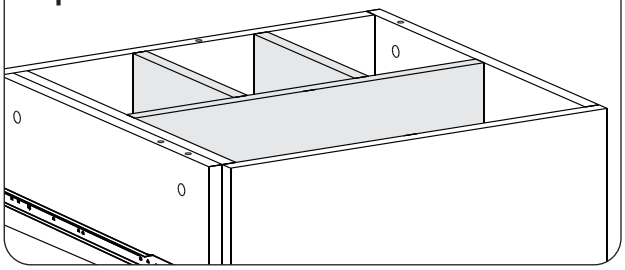

Option 5

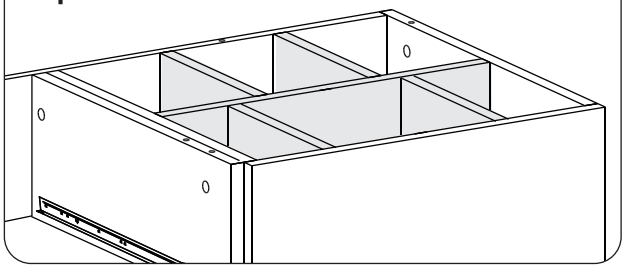

Option 6

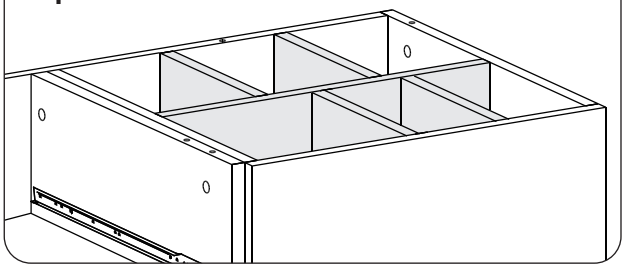

Option 2

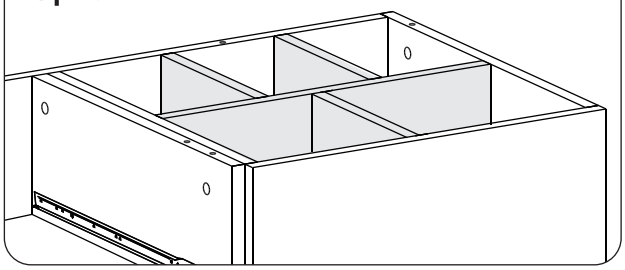

Option 7

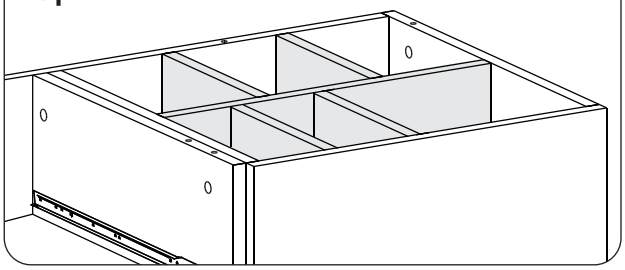

Option 3

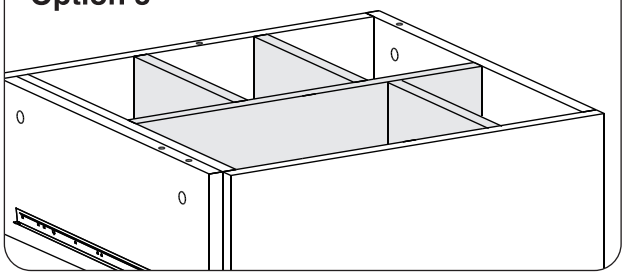

Option 8

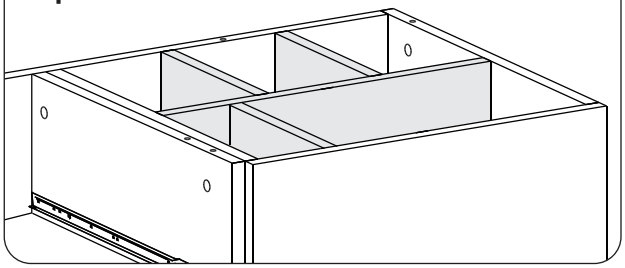

11

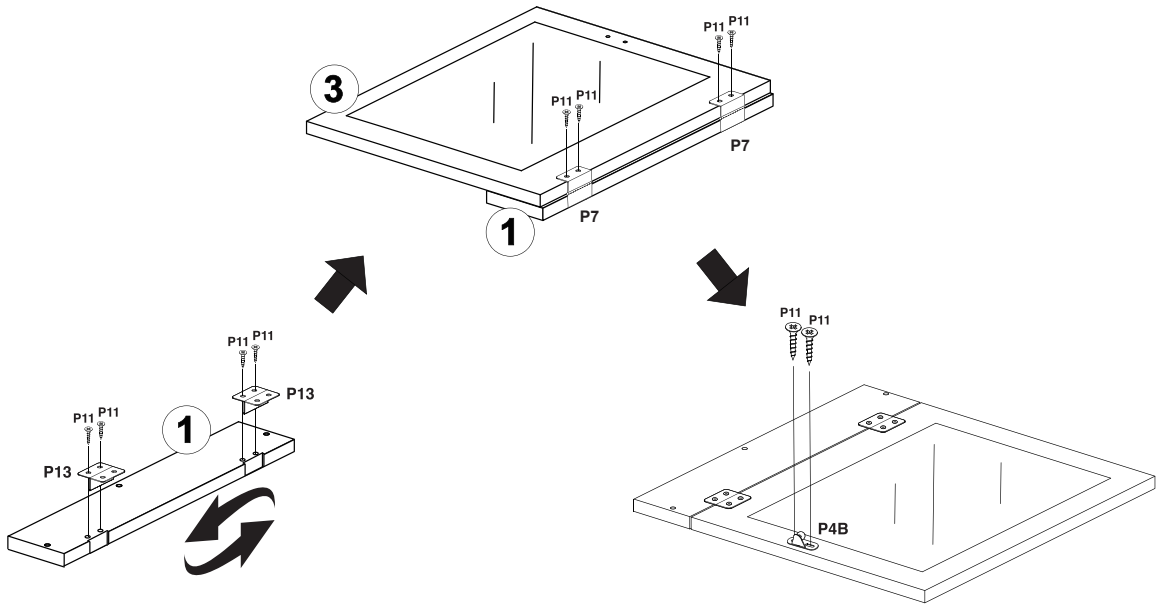
3
P11 P11
P11 P11
P7
P7
1
P11 P11
P13
P11 P11
1
P13
P11 P11
P4B

12

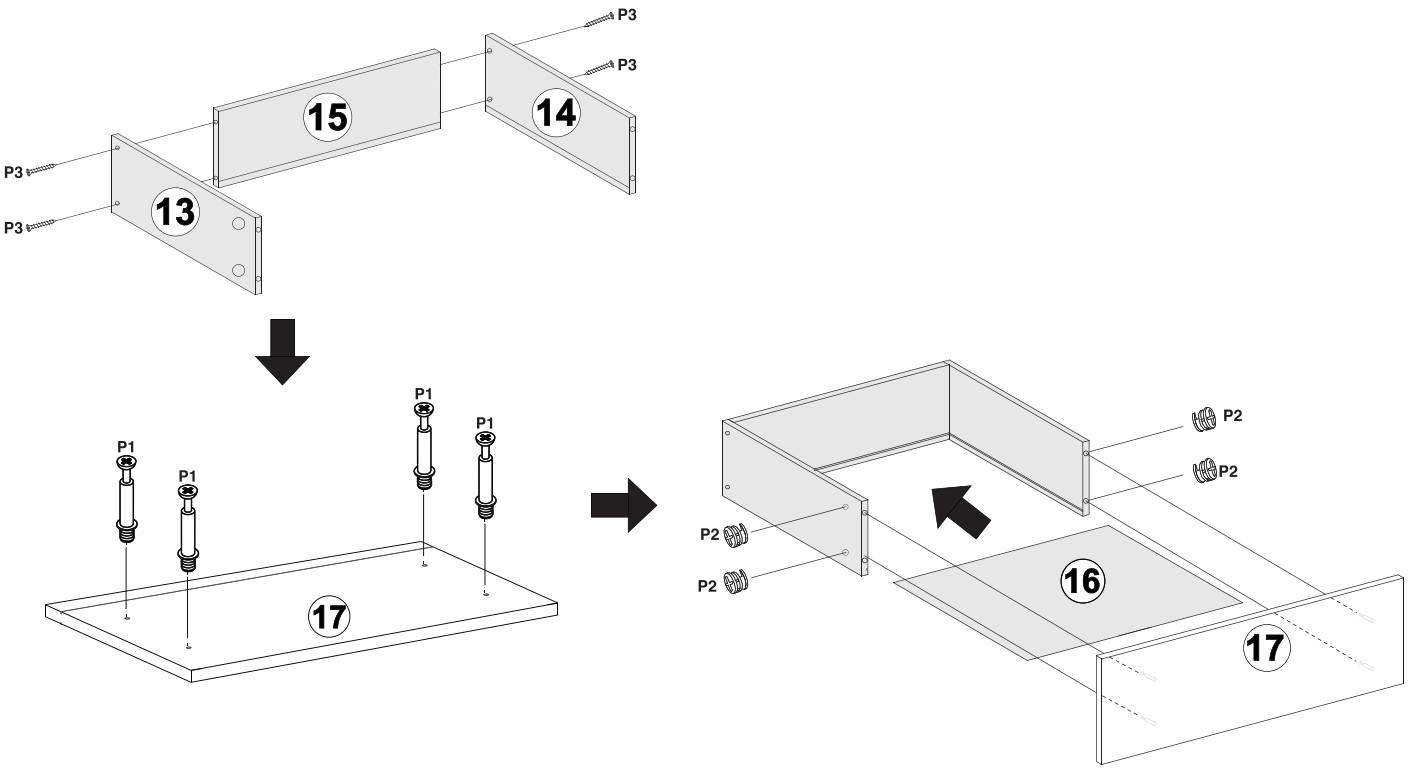
P3
P3
15
14
P3
P3
13
P1
P1
P1
P1
17
P2
P2
P2
P2
16
17

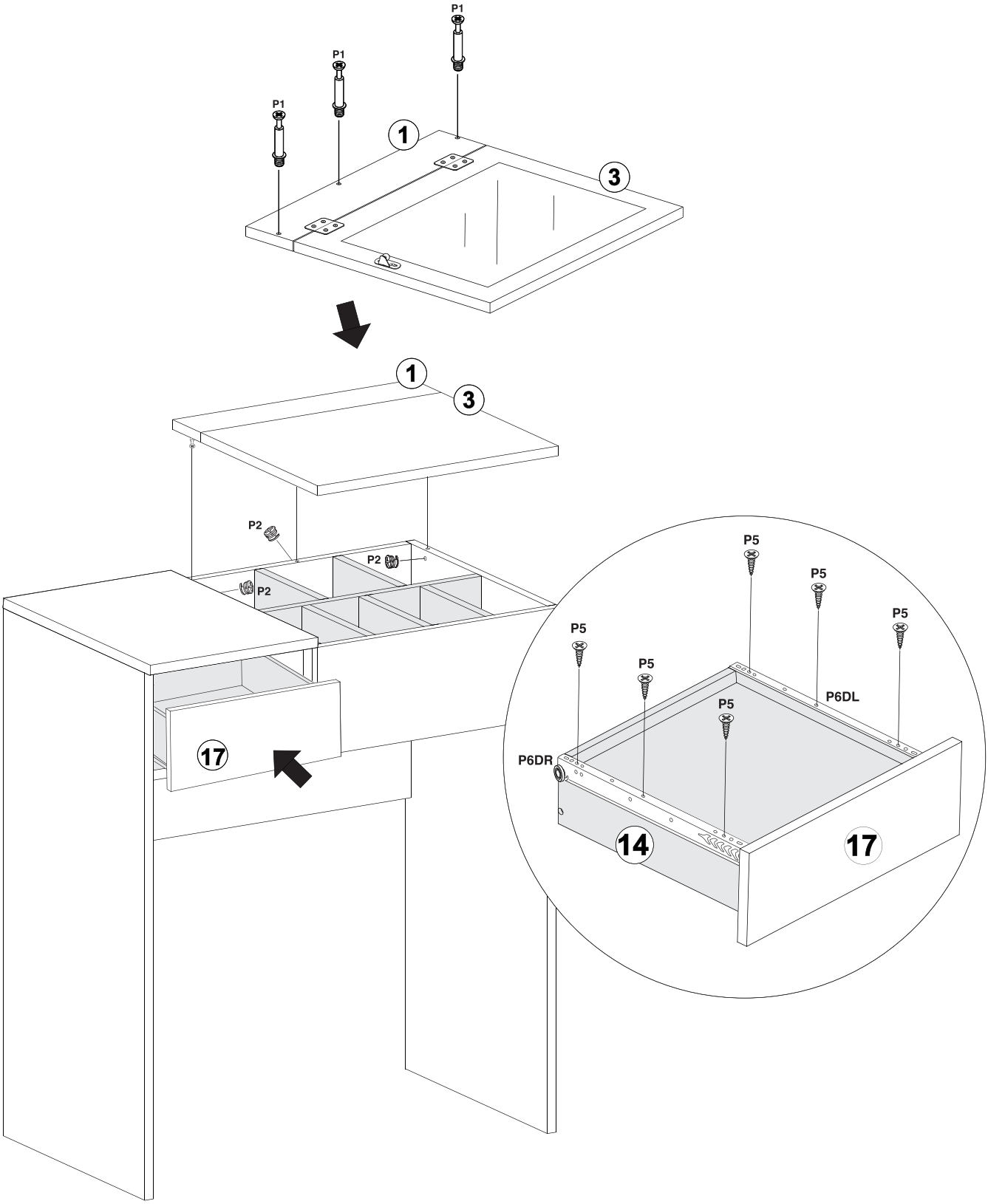
P1
P1
P1
1
3
1
3
P2
P2
P2
17
P5
P5
P5
P5
P5
P5
P6DL
P6DR
14
17

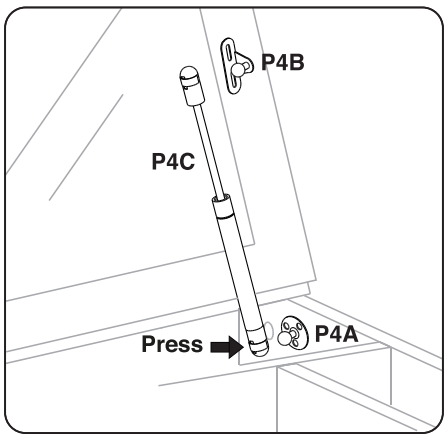

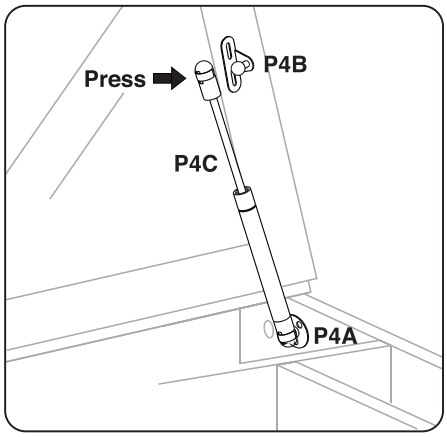

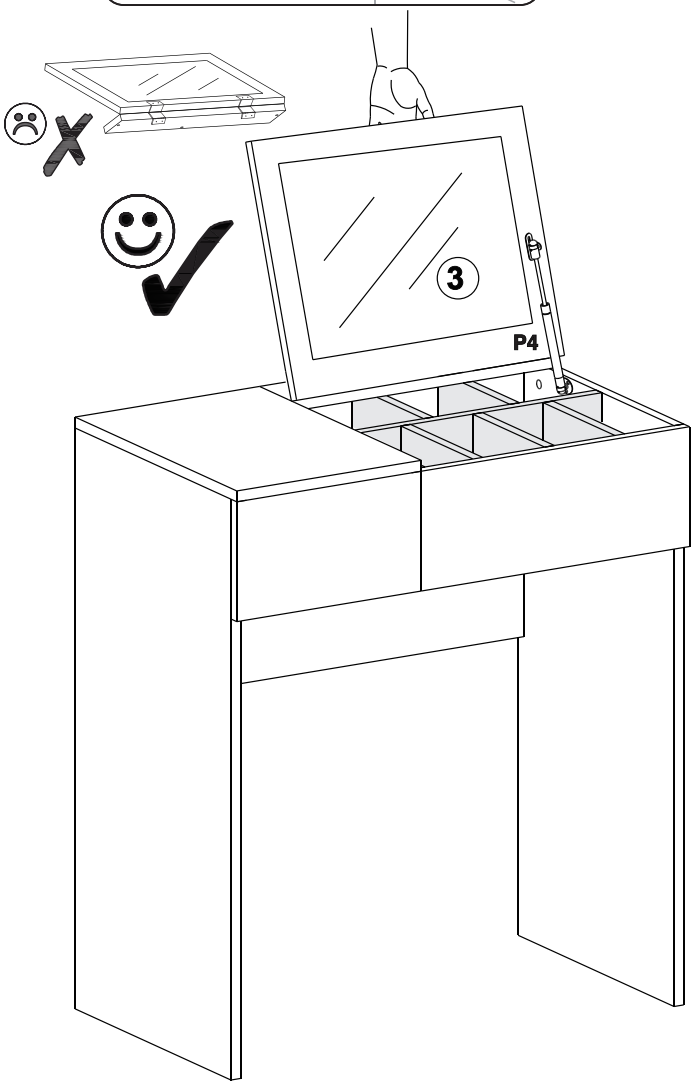

How to take out the Pneumatic Rod?

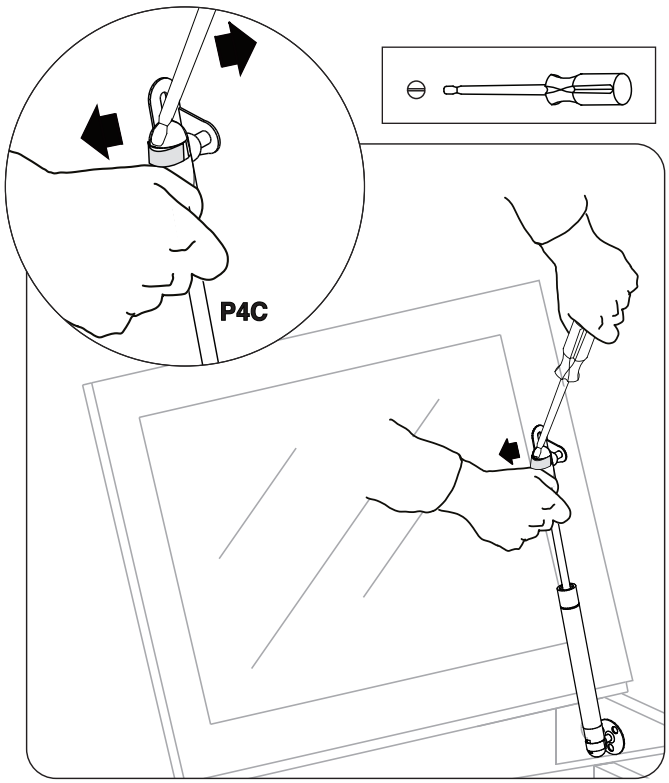

15 How to adjust the mirror angle?

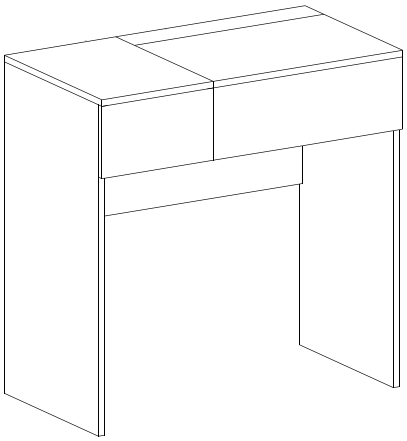

Option 1

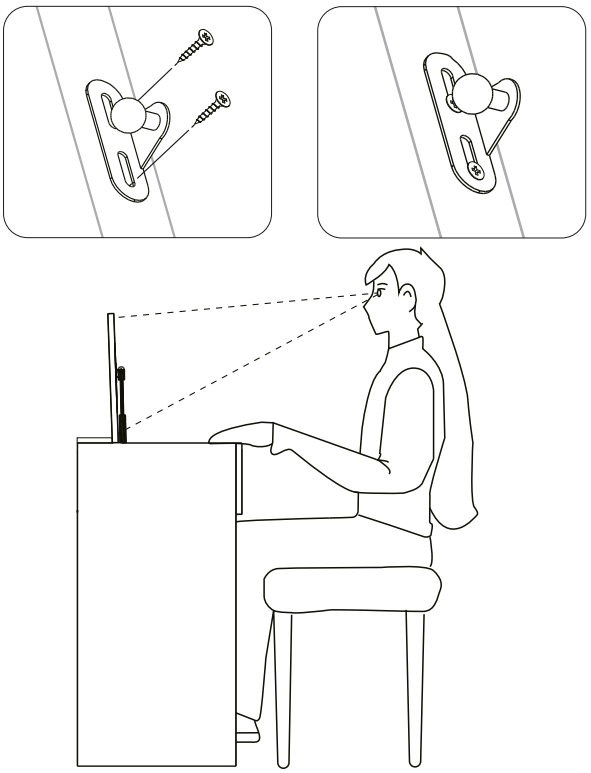
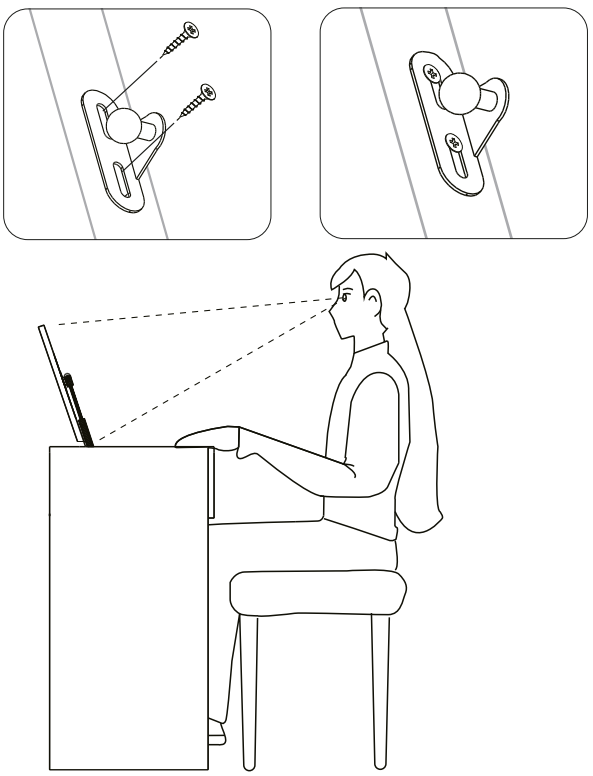
Option 2