INSTRUCTION MANUAL

Parts

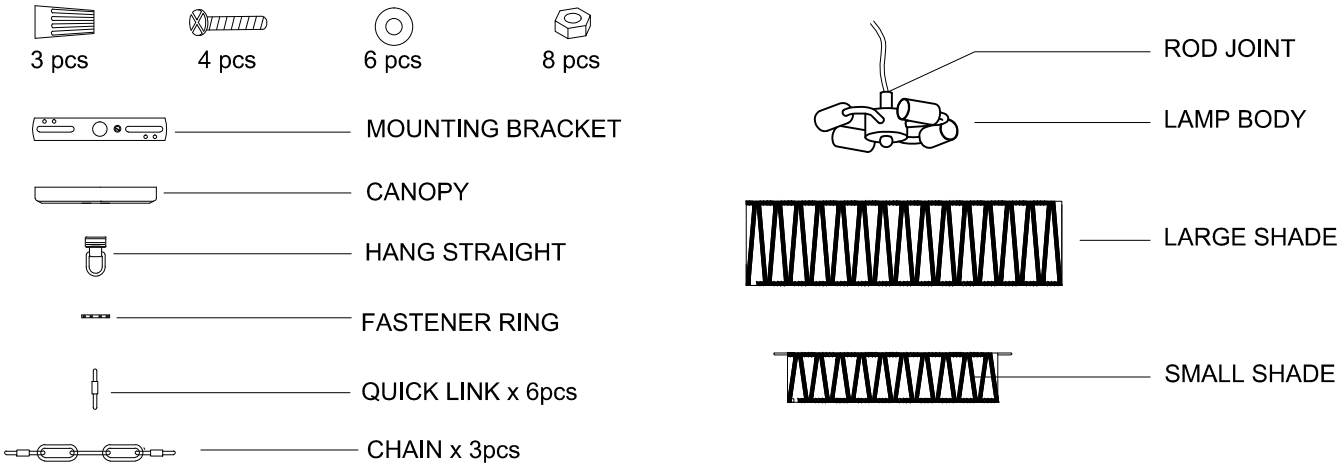

①

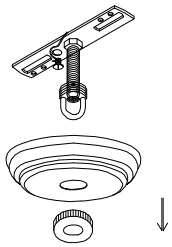

Release the mounting Bracket from the canopy.

②

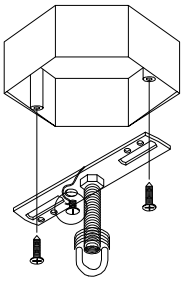

Fasten the mounting bracket(with Hang Straight) to the ceiling Junction box by the screws.

③

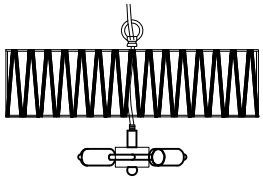

Let the cable go through the hole of the Large Shade and Hang Loop,fasten the Hang Loop.

④

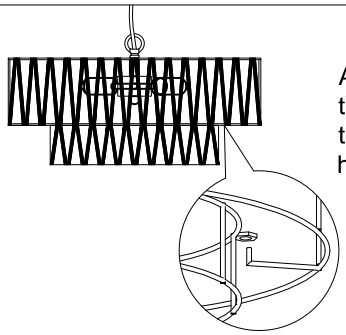

Attach the Small Shade to the Large shade, make the Hooks hanged in the holes of the Large Shade.

⑤

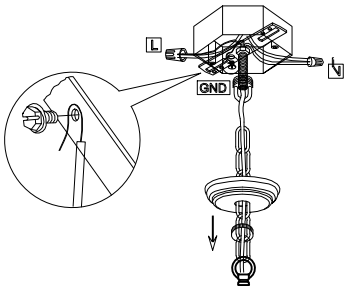

Connect the Hang Loop to the Chain,let the Fastener ring and Canopy go through the Chain,let the cable go through the thread of the Mounting Bracket,attach the Chain to the Hang Straight,then connect the wires.

⑥

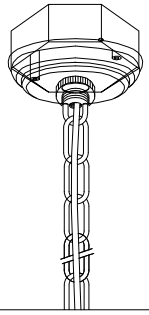

Position Canopy over Mounting Bracket then lock the Canopy by Fastener Ring .

⑦

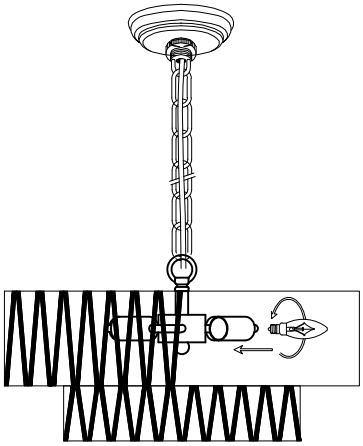

Fasten the Light bulbs to the lampholders,E12x4 pcs,type B,60W Max is recommended.