INSTALLATION INSTRUCTIONS

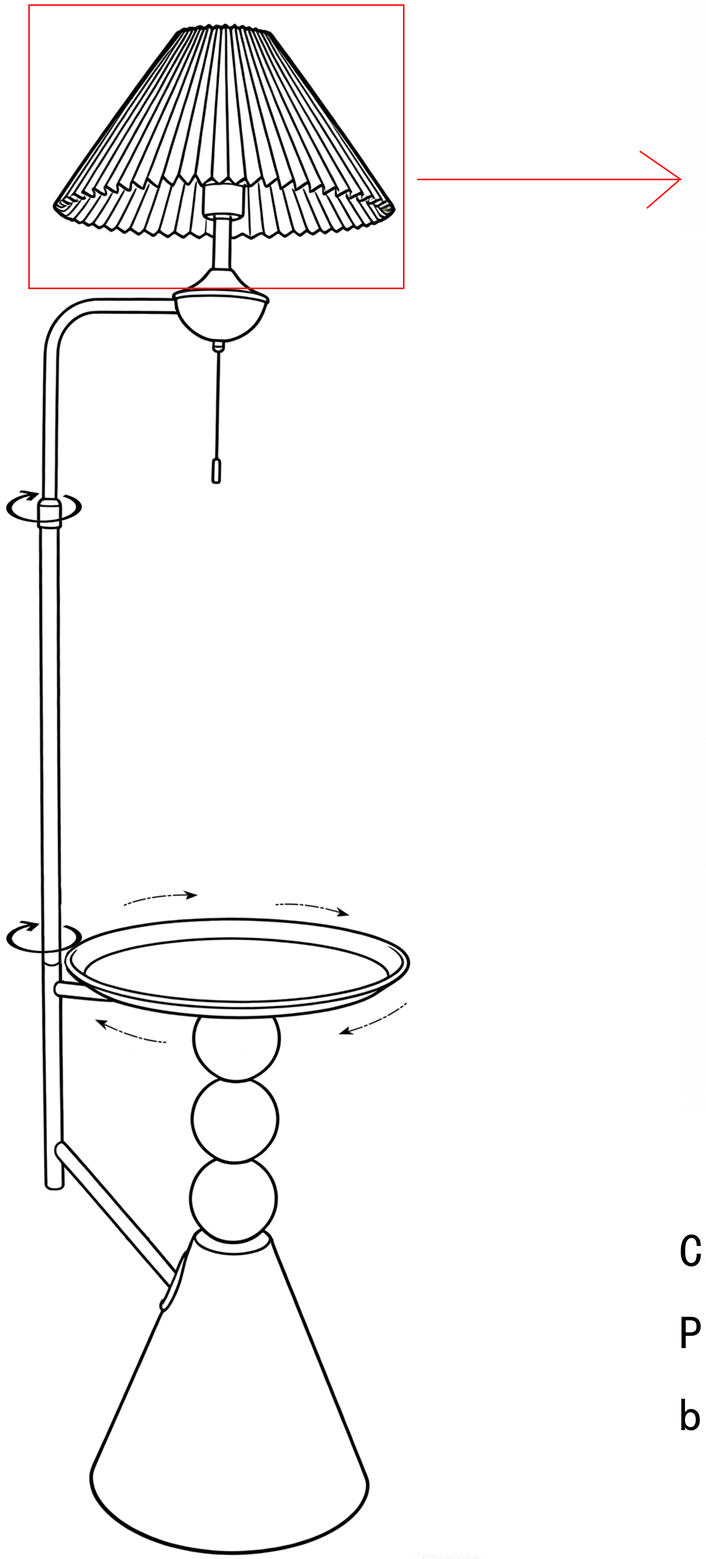

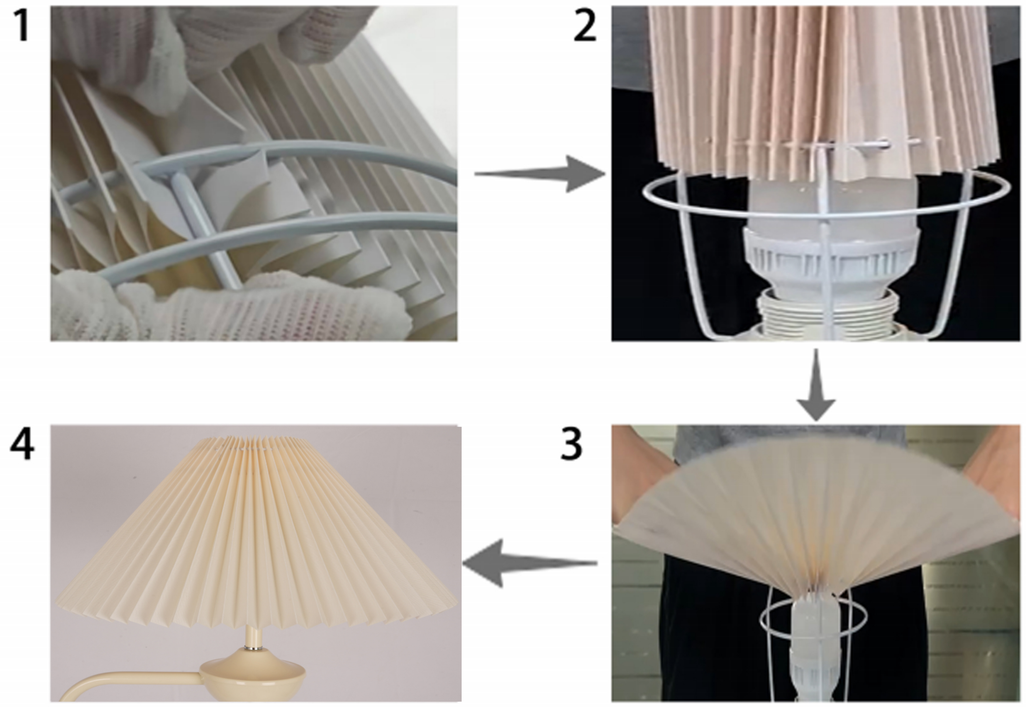

Lampshade installation diagram:

1. Make the round holes at the top of the lampshade have openings, as shown in Figure 1, and evenly attach them to the iron ring.
2. After uniform installation, as shown in Figure 2.
3. Press the lampshade outward and downward with both hands from the middle of the lampshade to unfold it.
4. After the lampshade is unfolded, as shown in Figure 4.

CAUSTION:

Please turn off the power when replacing the light bulb or maintaining the lamp.