USE AND CARE GUIDE

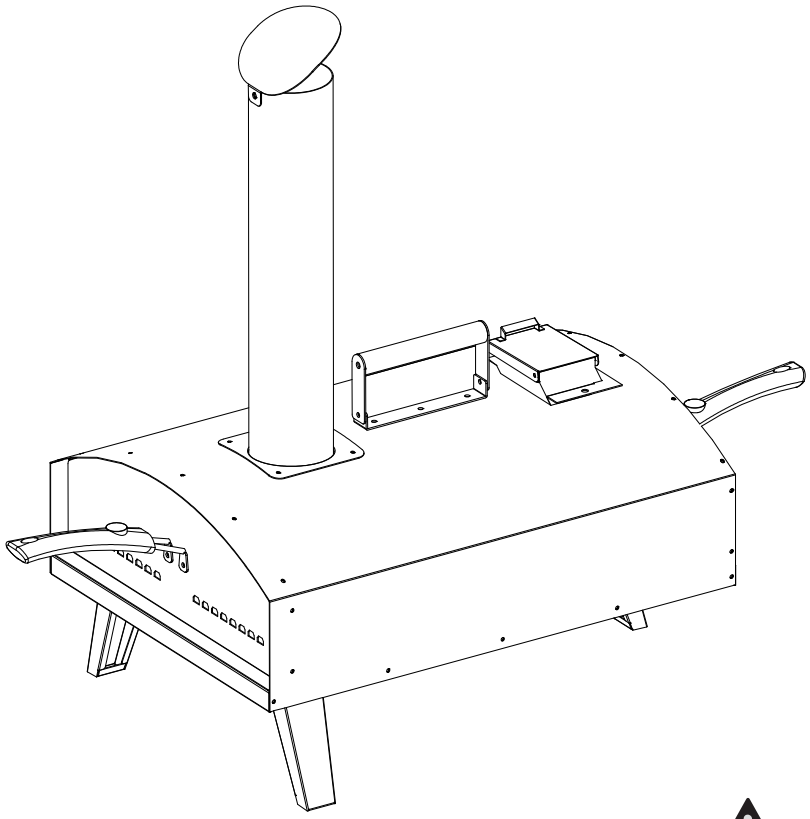

Assembly, Care And Use Instructions
Read Carefully Important:Retain These
Instructions For Future Reference.

This appliance is for Household use only.
This is not a commercial appliance.

Questions, problems, missing parts? Before returning to the store,
please contact our Customer Service

service@alphamarts.com

THANK YOU

We appreciate the trust and confidence you have placed in Captiva Desings through the purchase of our product. We strive to continually create quality products designed to enhance your home. Visit us online to see our full line of products available for your home improvement needs. Thank you for choosing Captiva Desings!

Table of Contents

Safety Information 2
Warning 2-3
Preparation 4
Components 4-5
Assembly Instructions 6-11
General Operating Instructions 12
Cleaning and Maintenance 13
Environmental Protection & Disposal 13
Warranty 14

Safety Information

Assembler/Installer

This instruction manual contains important information necessary for the proper assembly and safe use of this appliance. Read and follow all warnings and instructions before assembling and using this appliance.

Leave these instructions with the consumer.

Consumer/User

Follow all warnings and instructions when using this appliance. Keep these instructions for future reference.

Proper Utilisation

The barbecue may only be used for preparing suitable foods. All requirements of this assembly and operation manual must be complied with. Only for private domestic use!

Warning

Prop 65 Warning

This product can expose you to chemicals including Chromium (hexavalent compounds),which are known to the State of California to cause cancer and birth defects or or other reproductive harm. For more information visit www.P65Warnings. ca. gov.

Warning

⚠ WARNING:
Risk of burning!
- **Make sure that the barbecue is standing on a flat and fireproof surface that is not made of glass or plastic.**

⚠ WARNING:
This barbecue will become very hot, do not move it during operation!
- **Always wear barbecue gloves when grilling.**
- **Grill gloves must be tested in accordance with local code.**
- **For grilling use only qualified pellet.**
- **Use grilling tongs with long, heat-resistant handles.**
- **Allow the barbecue to cool down completely before cleaning it.**

⚠ WARNING:
DANGER to children and pets!
- **Never leave the hot barbecue unattended.**
- **WARNING! Keep children and pets away!**

⚠ WARNING:
- **Do not use spirit or petrol for lighting or re-lighting!**
- **Never use water to extinguish the charcoal.**

⚠ WARNING:
Risk of carbon monoxide poisoning!
- **Do not use indoors !**

Information for safe operation of the barbecue

•The barbecue must be positioned in a stable and secure surface.

Do not use in enclosed areas or on covered areas.

•Only use safe lighting materials.

•This barbecue is designed for outdoor use only.

•When barbecue is in use, maintain clearance of 48” between the hot barbecue and any combustible materials, such as beshes, trees, wooden decks, wooden fences, buildings, etc. Do not place hot barbecue under roof overhang or in any other enclosed area.

⚠ WARNING:
•It is important that the ventilation openings of the appliance are not obstructed.

Preparation

Before beginning assembly of product, make sure all parts are present. Compare parts with package contents list and hardware contents below. If any part is missing or damaged, do not attempt to assemble the product. Contact customer service for replacement parts.

Estimated Assembly Time: 20 minutes.

Tools Required for Assembly: Wrench (not included) and Phillips Screwdriver (not included)

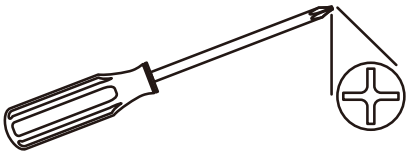



Components

NO.	NAME	PART	QTY
1	Grill Body	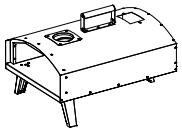	1
2	Chimney	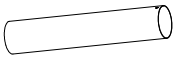	1
3	Pellet Channel		1
4	Chimney piece		1
5	Screw bag	 M5*10MM 5 PCS  M5 4 PCS	
6	Door		1
7	Pizza Stone	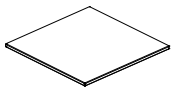	1
8	Handle		2

NO.	NAME	PART	QTY
9	Pellet Basket	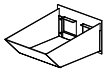	1
10	Pizza Shovel	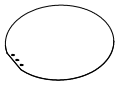	1
11	Pellet Filter	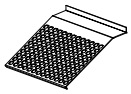	1
12	Handle of Pizza Shovel		1
13	Guide handle of Pellet Channel		1
14	Pellet Spoon		1
15	Pizza Cutter	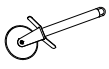	1
16	Glove		1

Components

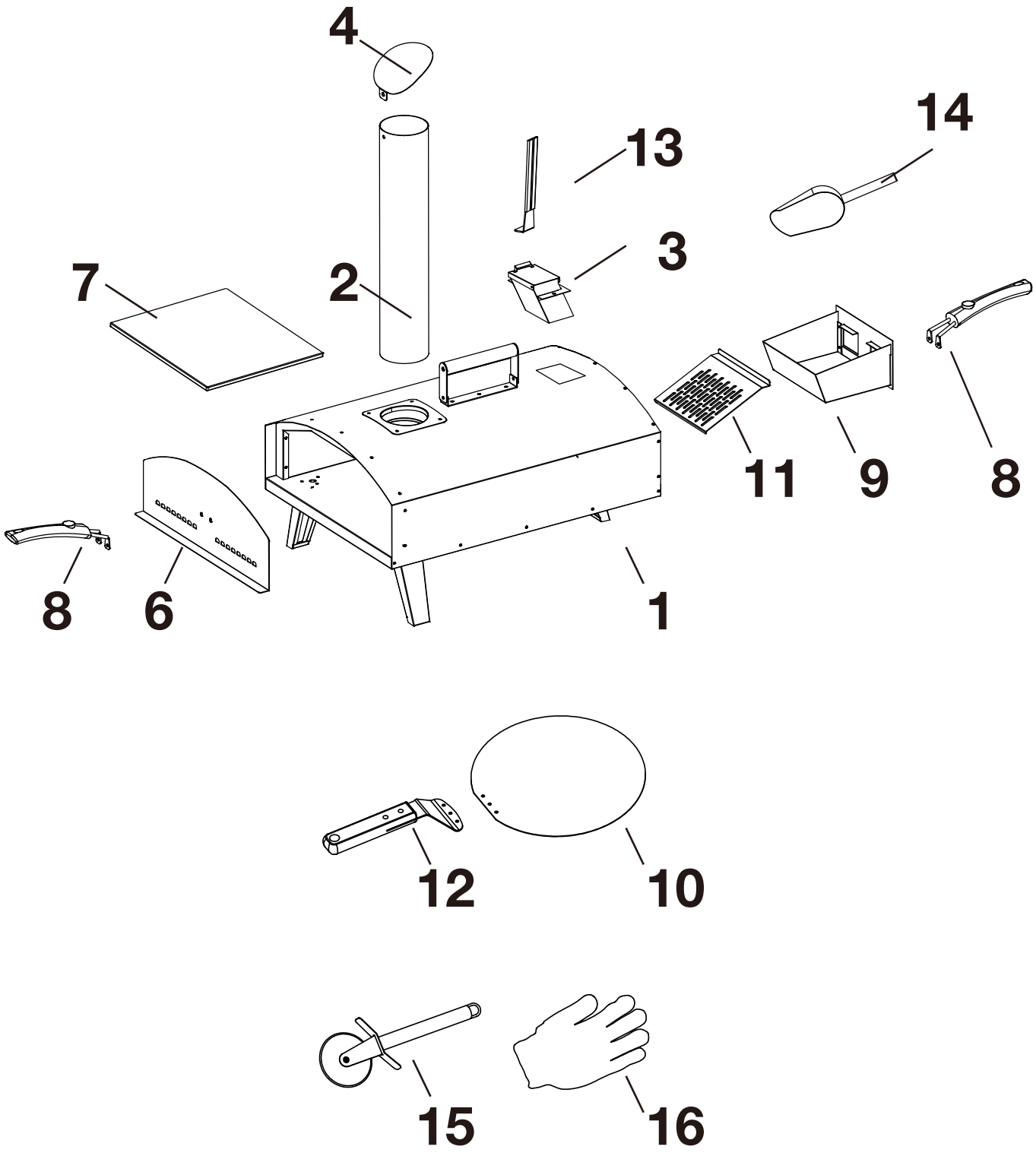

Assembly Instructions

Please read the assembly instructions carefully and follow the safety precautions. Allow sufficient time for assembly. Before starting assembly, clear an area measuring approximately two to three square meters. Remove the item from the packaging. Lay out all of the parts and any necessary tools so that they are within easy reach.

1

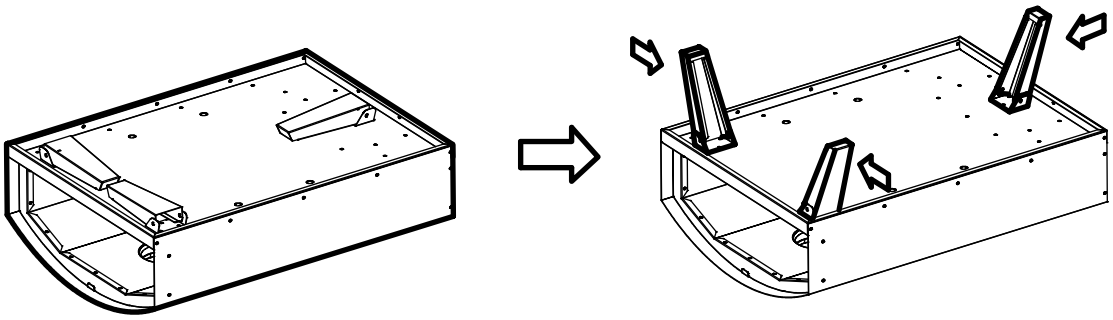

1.Open the legs.

2

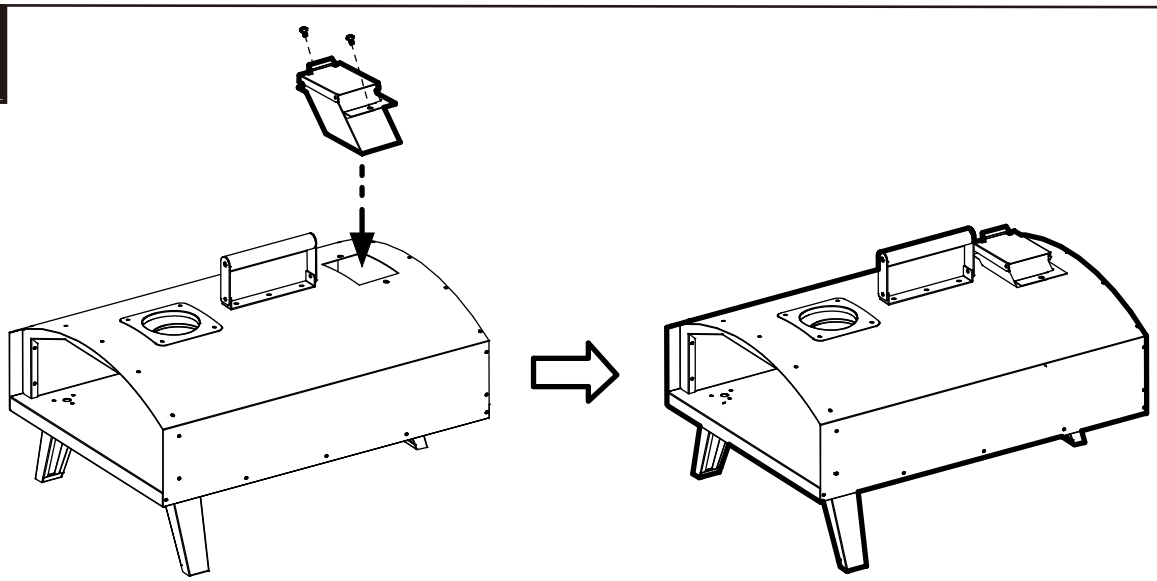

M5*8 2PCS

2.Install the channel .
(The screws have been pre-installed on the grill body.
Unscrew & reinstall to attach channel.)

Assembly Instructions

3

M5*8 1PC

3.Install the chimney.
(The screw has been pre-installed on the chimney .
Unscrew & reinstall to attached chimney piece.)

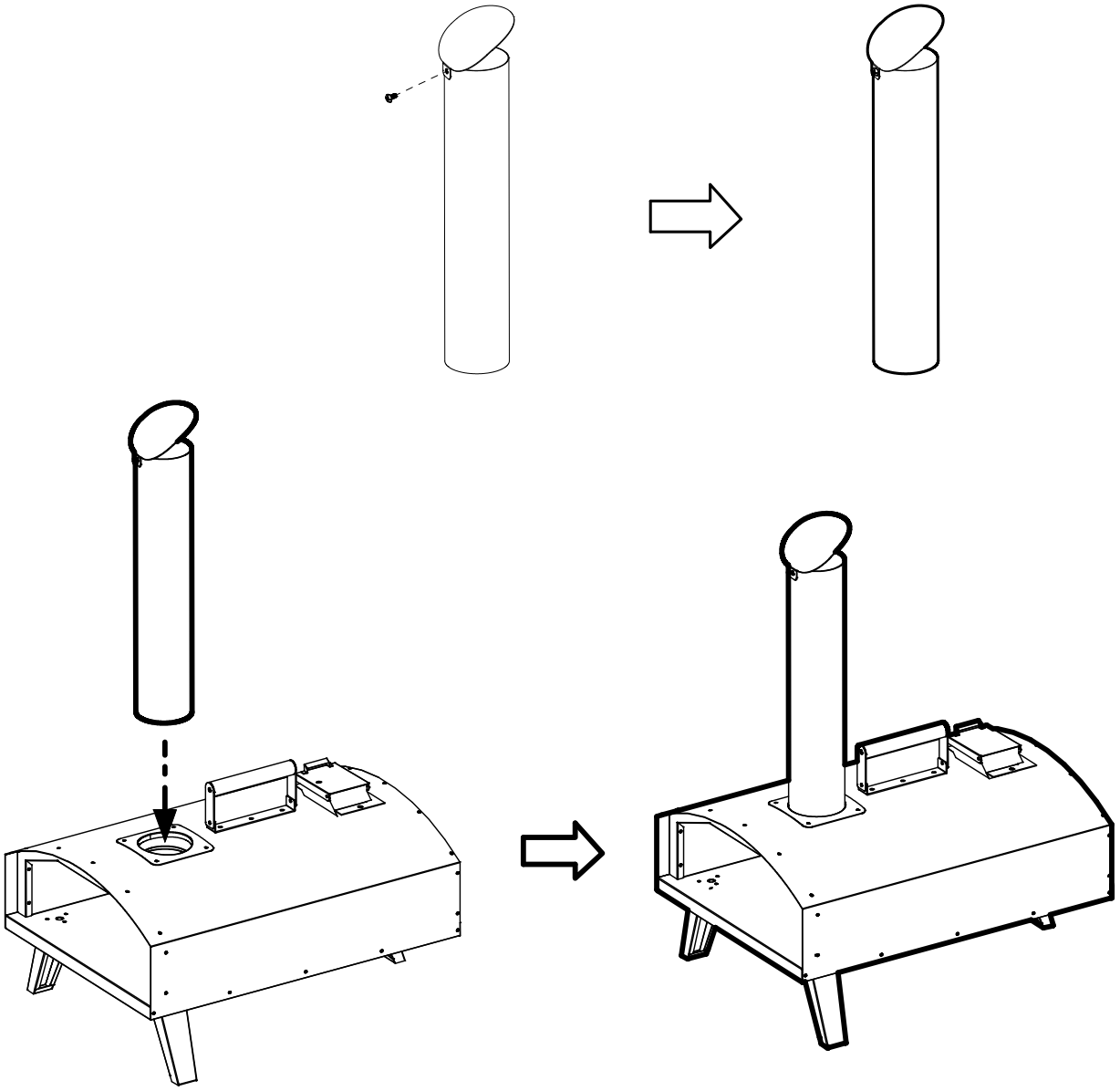

Assembly Instructions

4

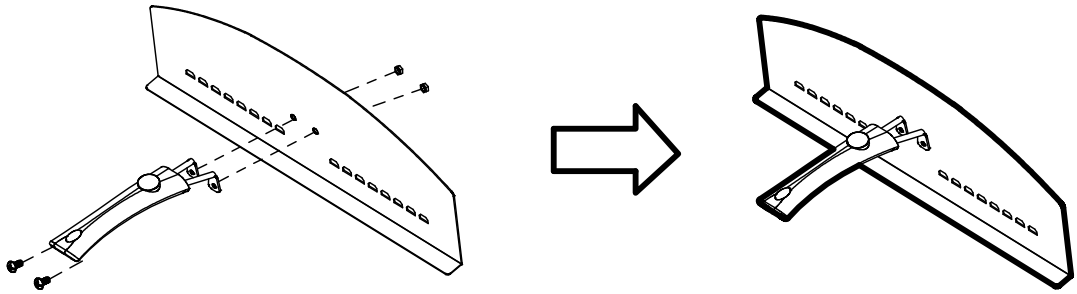

M5*8 2PCS M5 Nut 2PCS

4.Install the door.
(The screws and nuts have been pre-installed on the handles .
Unscrew & reinstall to the door.)

5

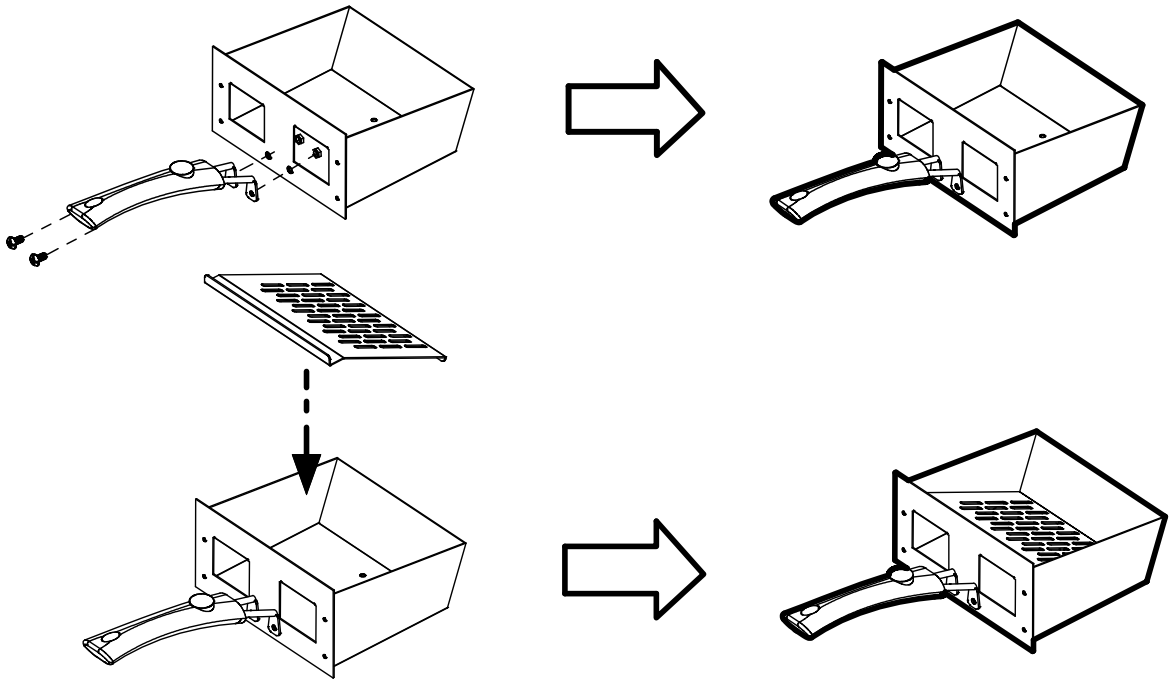

M5*8 2PCS M5 Nut 2PCS

5.Install the pellet box .
(The screws and nuts have been pre-installed on the handles .
Unscrew & reinstall to the pellet basket.)

Assembly Instructions

6

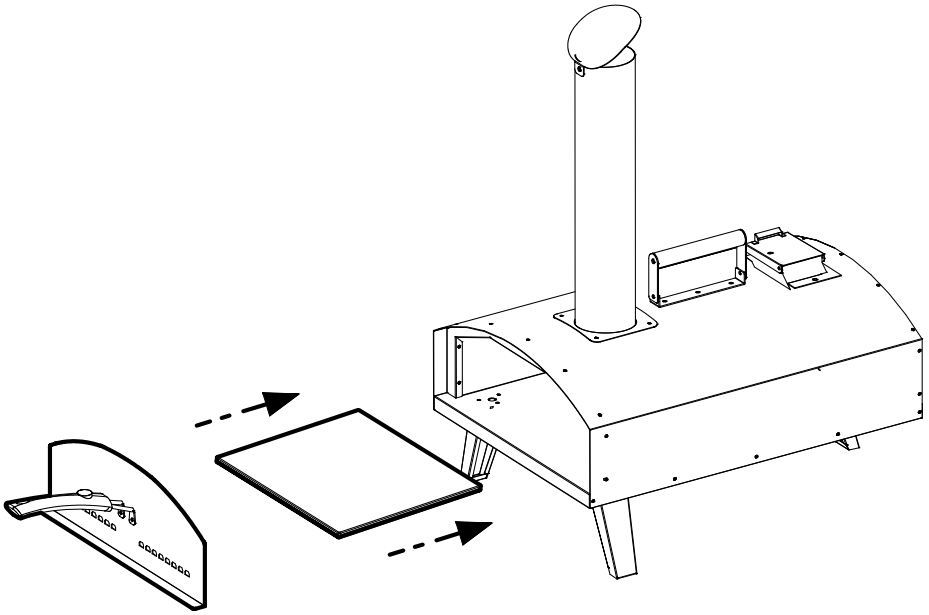

6. Put in the pizza stone.

7

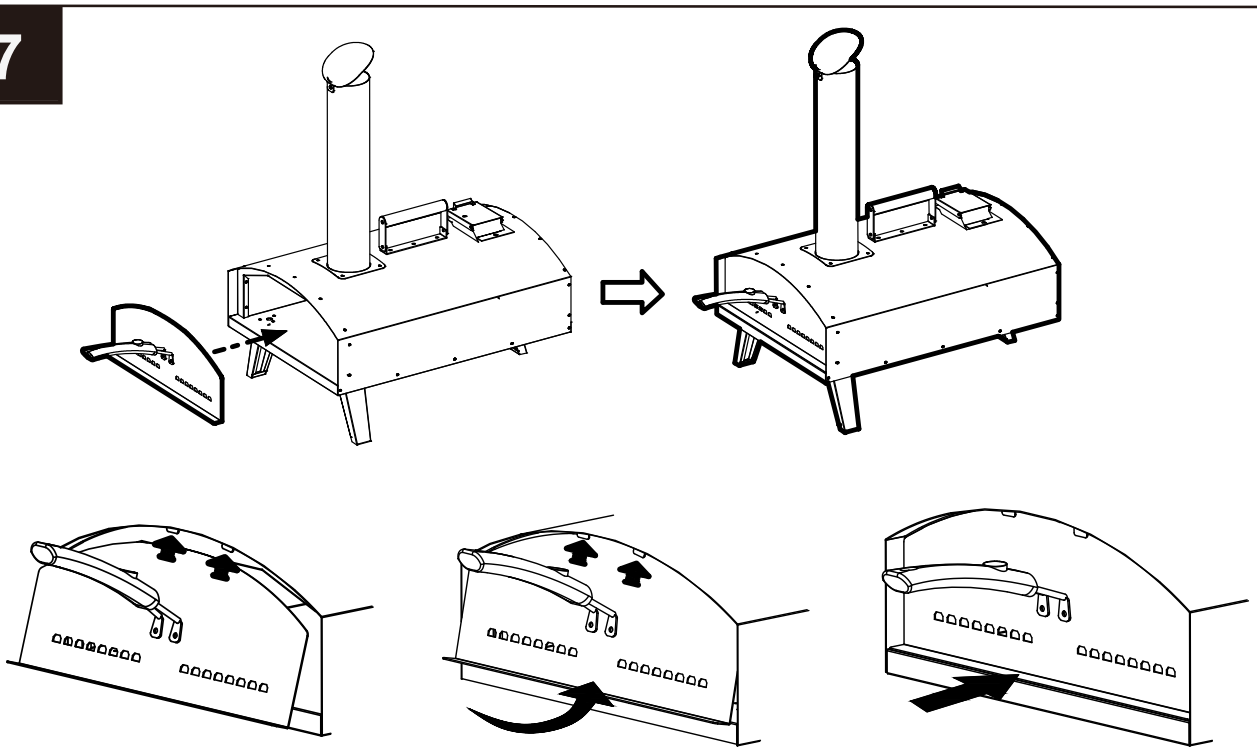

7. Attach the door.

Assembly Instructions

8

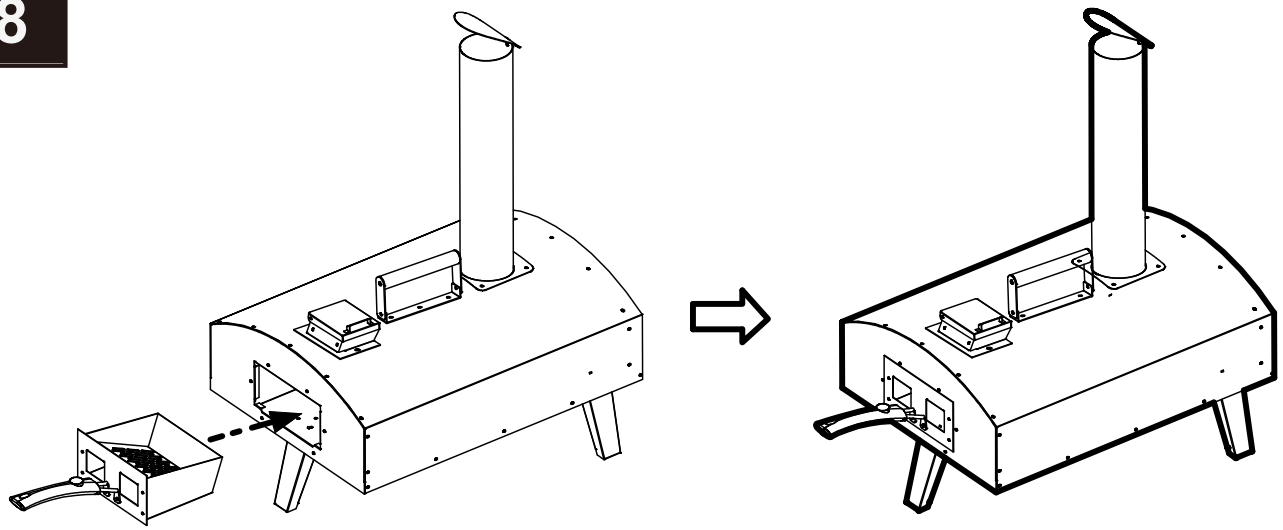

8. Attach the pellet box.

9

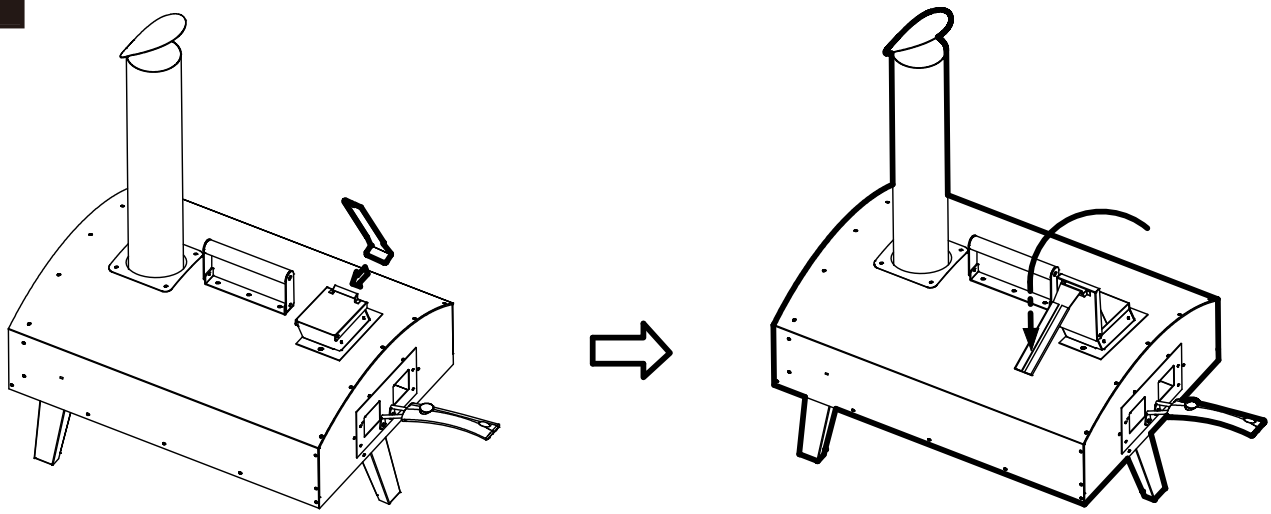

9. How to add pellets to the pellets box.

Assembly Instructions

10

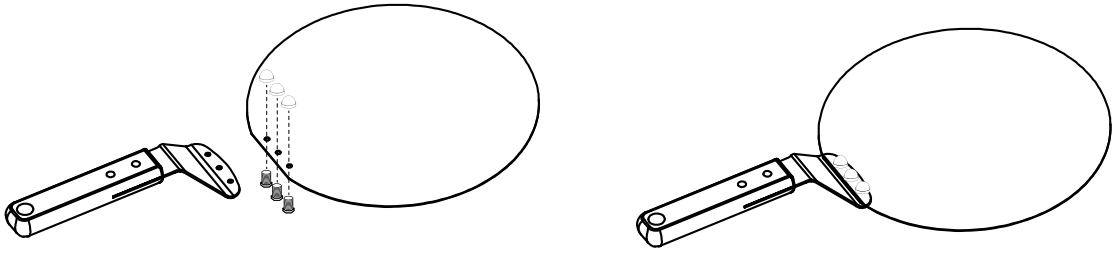

10. Install the pizza shovel.

11

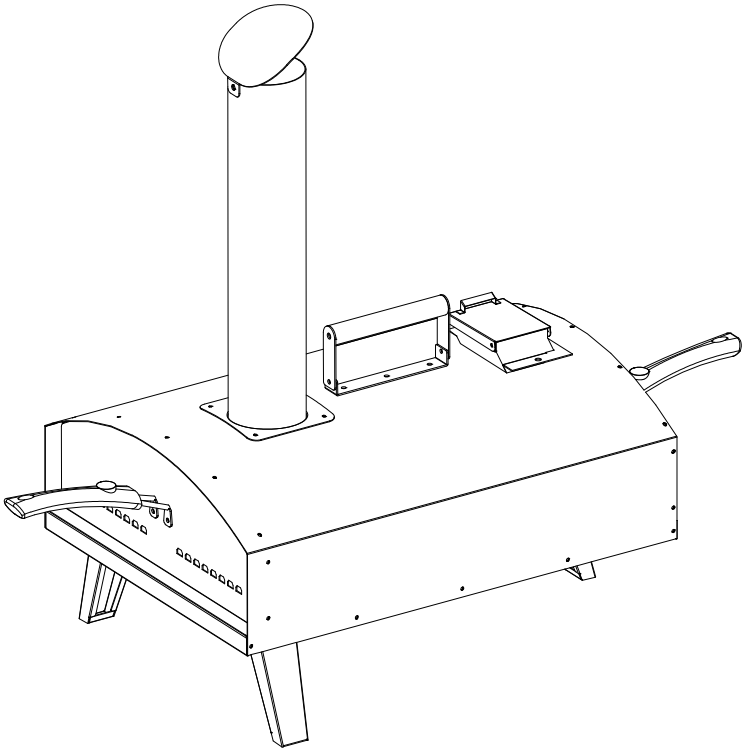

General Operating Instructions

⚠ WARNING:
Risk of burning!
When petrol or white spirits are ignited uncontrollable heat can develop as a result of deflagration. You should therefore only use harmless fuel.

Preparation(not included)

100% Hardwood Pellet
Firestarter
Blow Torch

How to light up the pellets

- **Make sure the door is on and only take off when adding or removing food.**
- **Fill 50% the pellet box with 100% hardwood pellet. Approximately 1.8lb,7-8 scoops.**
- **Place a natural firestarter at the lip of the burner grate. We recommend that you do not use petroleum based firestarter as these may impart unwanted flavors to your food.**
- **Light the firestarter and slide the pellet box back into the main body.**
- **If lighting using a blow torch, point to the pellet and hold it for 40 seconds or until the pellets are alight.**
- **When you need to refill the pellets, slide the grate out and fill small amounts of pellets into the pellet box then slide back into the main body. You may like to refill the pellets gradually to keep the certain temperature.**

Easy step to cook your pizza

- **Your pizza oven will take approximately 15 minutes to reach optimum cooking temperatures. If using in colder temperatures, preheat and cooking times could take longer.**
- **After 15 minutes , put your pizza into the oven and put the door on. Wait for 3-4 minutes , open the door, use the pizza peel to rotate the pizza let another side close to the fire, then put the door on again.**
- **Wait for 1 minute, open the door again and rotate the pizza,then close the door. Repeat this step for 3-4 times, your pizza is almost done.**
- **Different thickness will take different cooking times.**

NOTE:
- **Only use 100% hardwood pellets that are meant for cooking and grilling.**
- **Avoid using softwood pellets as they won't burn as efficiently.**
- **Do not use pellets meant for animal bedding or heating. These can contain additives and potentially harmful chemicals.**
- **Never add a full load of pellets while lighting or topping up. Instead, add small amounts of pellets gradually and allow these to light fully before topping up.**
- **Wind and cause flames to escape from the rear of your pizza oven. As always, use caution when your pizza oven is lit and do not leave it unattended.**
- **If lighting using a blow torch, point to the pellet and hold it for 40 seconds or until the pellets are alight.**
- **Keep door closed & preheat for 15 minutes.**

Cleaning and Maintenance

Cleaning

Cleaning is necessary to preserve the beautiful appearance of the barbecue. Do not use any scouring agents.

- **A rinsing cloth and some water with a commercial detergent is sufficient for the normal cleaning process.**
- **When you clean your pizza stone,soak it in hot water and scrub clean with a nylon brush.**
- **If the inside surface of the barbecue lid has the appearance of pealing paint, baked on grease build-up has turned to carbon and is flaking off. Clean thoroughly with strong hot soapy water solution. Rinse with water and allow to completely dry.**

INTERIOR OF BARBECUE BOTTOM

Remove residue using brush, scraper and/or cleaning pad then wash with soapy water solution. Rinse with water and allow to dry.

Care Instructions

- **You should only cook pizza and dry, bread-based food directly on the stone baking board.**
- **The stone baking board is not dishwasher safe.**
- **Leave your pizza oven to burn through any remaining pellets and cool naturally for at least 60 minutes.**
- **We recommend that you store pizza oven indoors during extended periods of time and that you keep your stone baking board in a warm,dry environment when your pizza oven is not in use. Ensure that your pizza oven is cool and dry and use pizza oven cover(not included) for storage.**

⚠ WARNING:

Do not apply water directly to your pizza oven to extinguish or cool it down as this may cause damage and personal injury!

Environmental Protection & Disposal

Pay attention to cleanliness when using the barbecue and dispose of waste in a clean and safe manner. As a general rule, only dispose of waste in designated metal or non-flammable containers. The local regulations for disposal apply.

Warranty

LIMITED WARRANTY

This warranty is a limited warranty, and applies to the original purchase is required. This is a residential warranty and does not applyto commercial use. This collection carries a (1) year limited warranty and is valid from original date of purchase to the original owner (proof of purchase required).

WHAT IS COVERED

We warrant the frame to be free of Manufacturing defects to the original purchaser for one year.

WHAT IS NOT COVERED

This warranty does not cover commercial use, hardware, acts of nature, fire, freezing and abusive.
In addition, purchased parts are not covered under this warranty.
We reserve the right to make substitutions with similar merchandise, if the model in question is no longer in production.

For a copy of our full limited warranty, please contact our customer service team below.

Questions, problems, missing parts? Before returning to the store
please contact our Customer Service

service@alphamarts.com

1-877-606-2818