INSTRUCTION MANUAL

Recliner Armchair

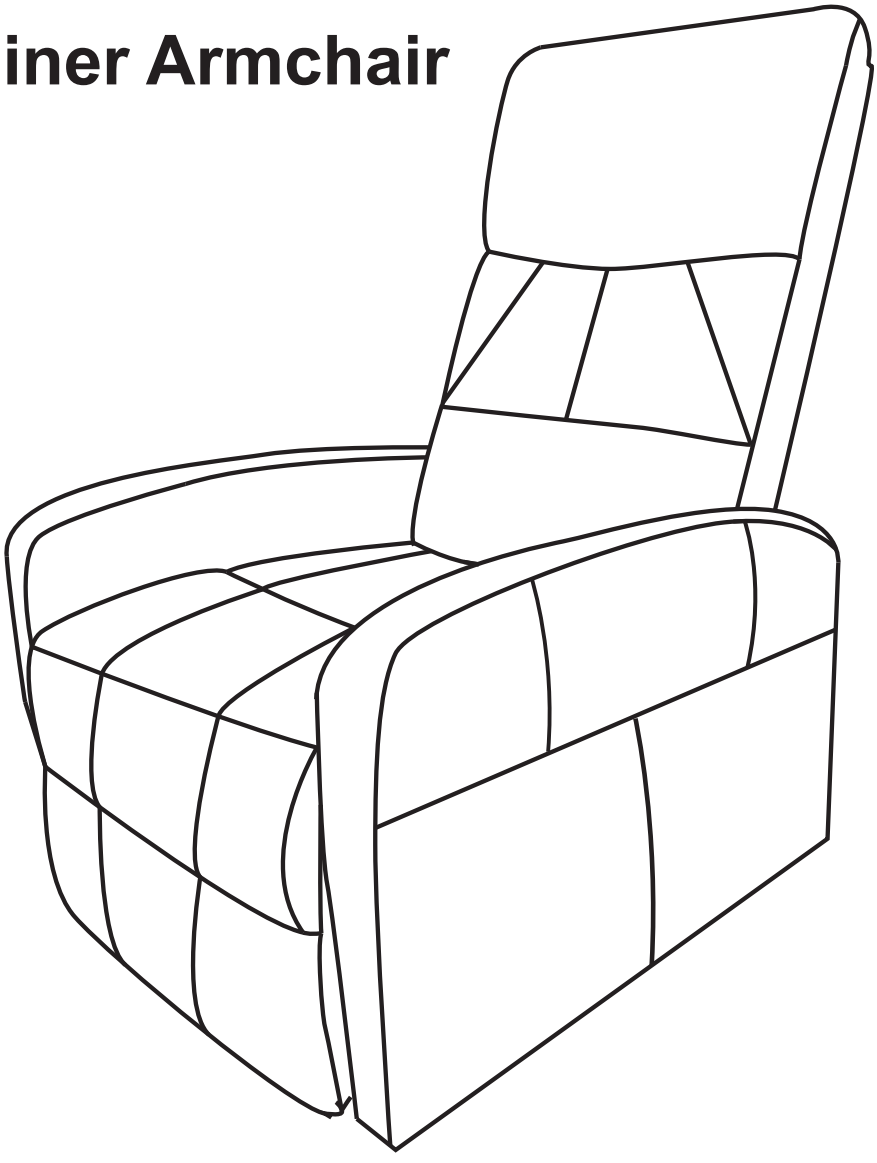

Customer Service Email: **comfortrecliner@yeah.net**

NOTE1: It is recommended that 2 or More adults would be easier to assemble the chair.

NOTE2: If you have any problems with installation or use, please contact us directly. Our customer service will enthusiastically provide you with solutions.

Catalogue

Package List 1

Take out parts G & H 2

Before Assembly 3

Important Safety Instructions 4

To store 4

To clean 4

Step1-10 5-9

How to recline? 10

How to get footrest latch down? 10

How to use remote control? 11

Frequently Asked Questions 12

Recliner Installation Video

Package list

Note:Please make sure all parts are included.If not email us: comfortrecliner@yeah.net

Part		Qty	Part		Qty
A	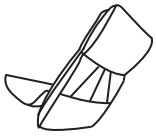 Backrest Cushion	1	I	 Insert Plate	2
B	 Seat Cushion	1	J	 Leveling Feet	4
C	 Right Armrest Contains G and H	1	K	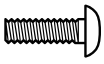 6x20 Screws	16
D	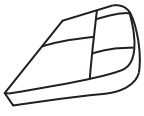 Left Armrest Contains G and H	1	L	 6x35 Screws	8
E	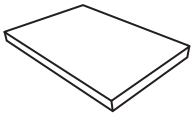 Seat Frame (flat)	1	M	 Hex Wrench	1
F	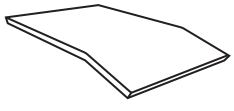 Backrest Frame (curved)	1	N	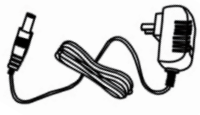 Power Plug	1
G	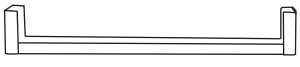 Crossbar Metal Frame	2	O	 Massage Remote Control	1
H	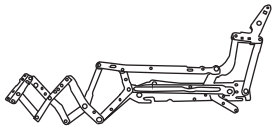 Telescopic Metal Frame	2			

Take out parts G & H

Recliner Installation Video

Notice: Peel apart the Velcro straps on both armrests, then remove the accessories from inside the armrests: 2 pieces of G and 2 pieces of H.

2 or More adults would be easier to assemble the chair.

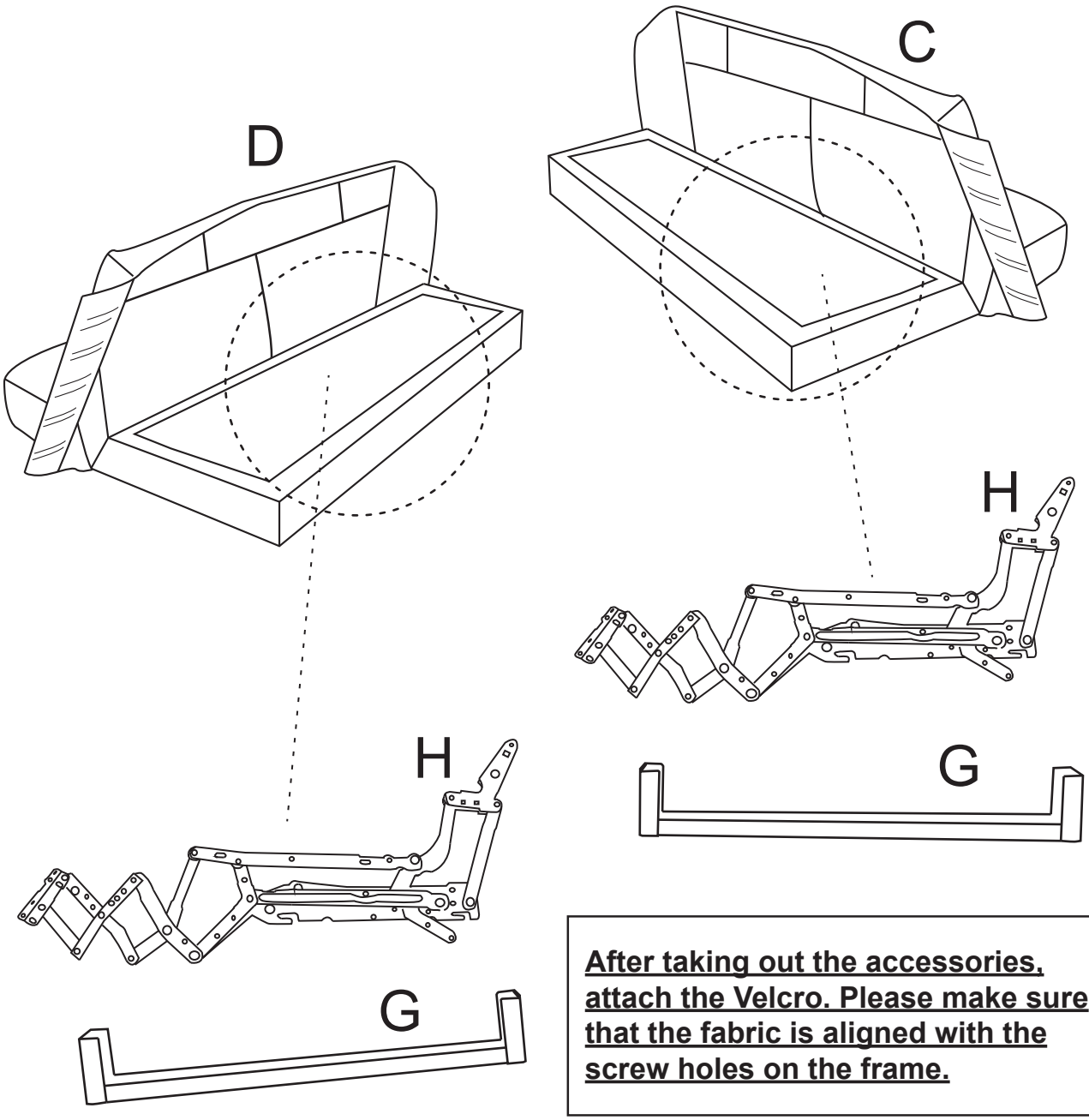

After taking out the accessories, attach the Velcro. Please make sure that the fabric is aligned with the screw holes on the frame.

Before Assembly

Note: This massage sofa is delivered by 2 parcel. If you have any questions, please feel free to contact us at any time: comfortrecliner@yeah.net

1. Keep this instruction manual for future reference.
2. It is important to only use this product on a firm, level surface.
3. Keep all small parts out of reach of children and animals.
4. Make sure you have all the components, as listed in this instruction manual, if not, email us:comfortrecliner@yeah.net
5. Remove all packaging and place the components on top of the empty box or on a clean floor to prevent them from becoming scratched.
6. Make sure you have the right tools and a clean, dry and spacious area for assembly.
7. Assemble on a flat / firm surface to avoid damage.
8. Assemble in the room you intend to use the chair or as close as possible to that room.
9. Carefully follow each assembly step in the correct order to prevent incorrect assembly.
10. Before use, ensure that the product is fully assembled and only then should the screws and bolts be fully tightened but not over tightened.
11. Do not discard any packaging until the product is fully assembled. This will avoid disposing of any parts.
12. Do not use or attempt to assemble this product if parts are missing damaged or worn. Please email us: comfortrecliner@yeah.net
13. Place the product at a distance from the wall so that you can use the reclining function.

Important Safety Instructions

1: If you have any concerns regarding your health, consult your doctor before using this product. Individuals with pacemakers should not use this product.
2: If you experience pain in a muscle or joint for a prolonged period of time. Discontinue use and consult your doctor.
3: Persistent pain could be a symptom of a more serious condition.
When using an electrical appliance, basic precautions should always be followed, including the following:

1. This product is for use on a 12V circuit. Make sure that the product is connected to an outlet having the same configuration as the plug.
2. Always unplug the massager from the power source after use, and before cleaning.
3. Do not reach for massager if it has fallen into water. Unplug immediately.
4. An appliance should never be left unattended when plugged in. Unplug from outlet when not in use, before putting on or taking off parts or attachments.
5. Do not use outdoors.
6. Do not carry this appliance by supplied cord as a handle.
7. Keep the cord away from heated surfaces.
8. Close supervision is necessary when this appliance is used by on or near children, invalids or disabled persons.
9. This unit is not a toy. Children should not use it or play with it.
10. Do not operate where aerosol (spray) products are being used or where oxygen is being administered.
11. Do not use near eyes or other highly sensitive areas.
12. Keep cord away from heated surfaces.
13. Use this appliance only for its intended use as described in this manual. Do not use attachments not provided with the unit.

To store

1. Place unit in its box or safe, dry, cool place. Avoid contact with sharp edges or pointed objects which might cut or puncture the fabric. Do not wrap power cord around the unit.
2: Do not hang the unit by power cord.

To clean

1: Insure the unit is unplugged from the power source, and allow to cool before cleaning.
2: Do not place in any liquid to clean. Clean fabric cover by wiping witha damp sponge, using a mild detergent or suds. Pat dry with clean, dry cloth.
3: Do not use abrasive cleaners, brushes, gasoline, kerosene, glass / furniture polish, paint thinner or water hotter than 120 °C to clean the unit.
4: To clean the unit, make sure the massager is unplugged. Allow the unit to cool and the wipe down with a damp clean cloth. Do not use any strong chemical cleaners.

Product Assembly

Recliner Installation Video

Step 1

Use four 6*35 screws (L) to attach the telescopic metal frame (H) to the seat cushion frame (E). Please pay attention to the L/R and forward labels; for the seat cushion frame, ensure that the side with the upward label faces upward.

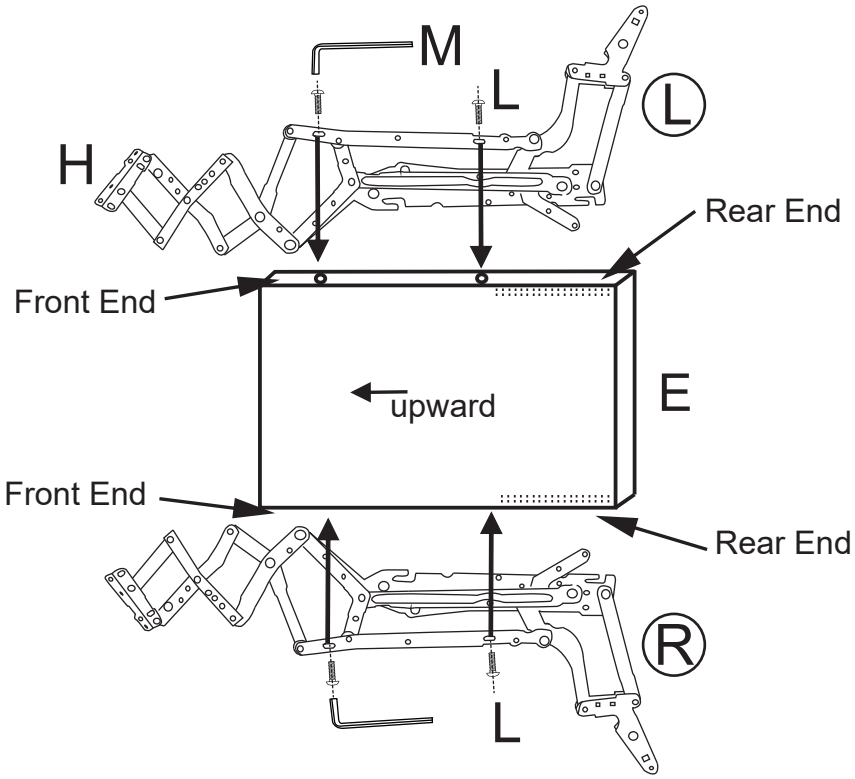

Step 2

Peel off the protective film on the Velcro of the seat cushion (B). Then attach the seat cushion (B) to the seat cushion frame (E).

Please ensure that the grooves on both the left and right sides fit exactly into the corners of the telescopic metal frame. If they are not aligned, reattach the seat cushion (Part B) and adjust it horizontally to the left or right.

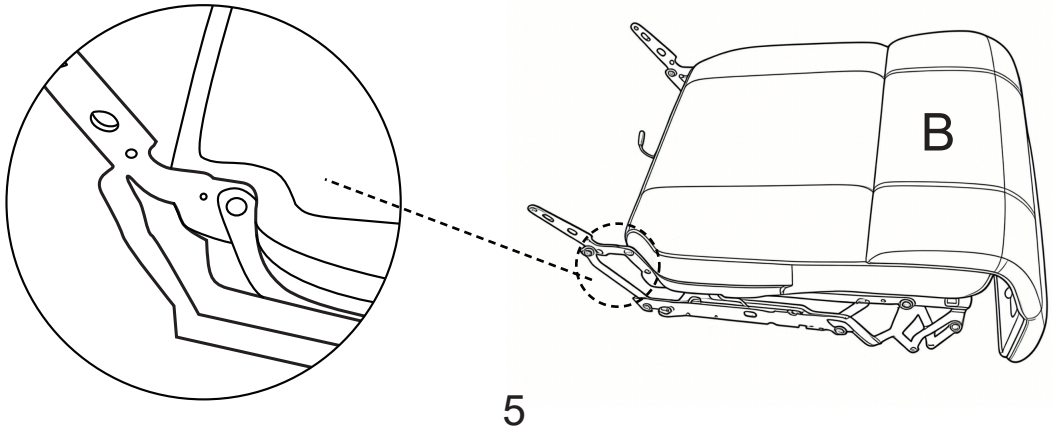

Step 3

Flip the base over, and use four 6*20 screws (K) to fasten the seat cushion (B) to the telescopic metal frame (H).

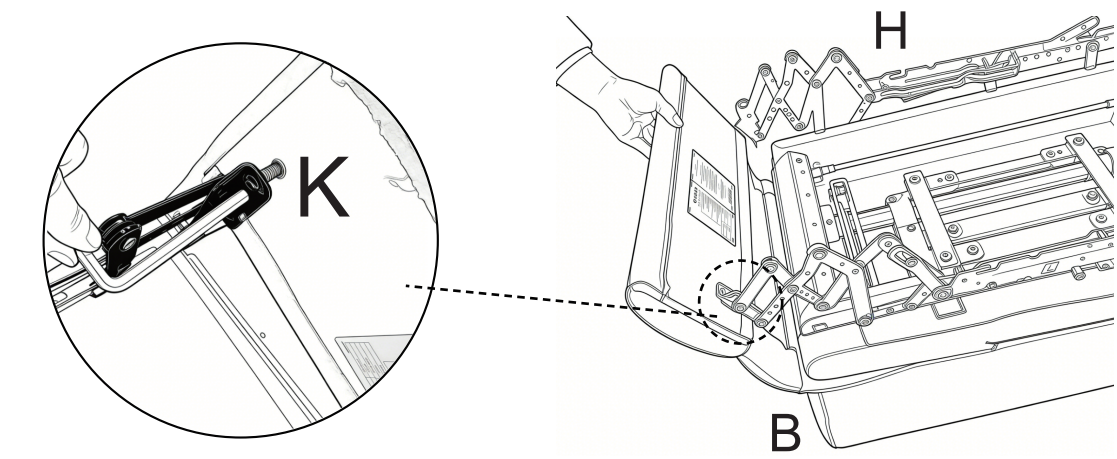

Step 4

Fasten four 6*35 screws (L) into the holes in the middle of the left and right armrests.
Note: Do not fully tighten the screws—leave approximately 50% of the screw shanks exposed.

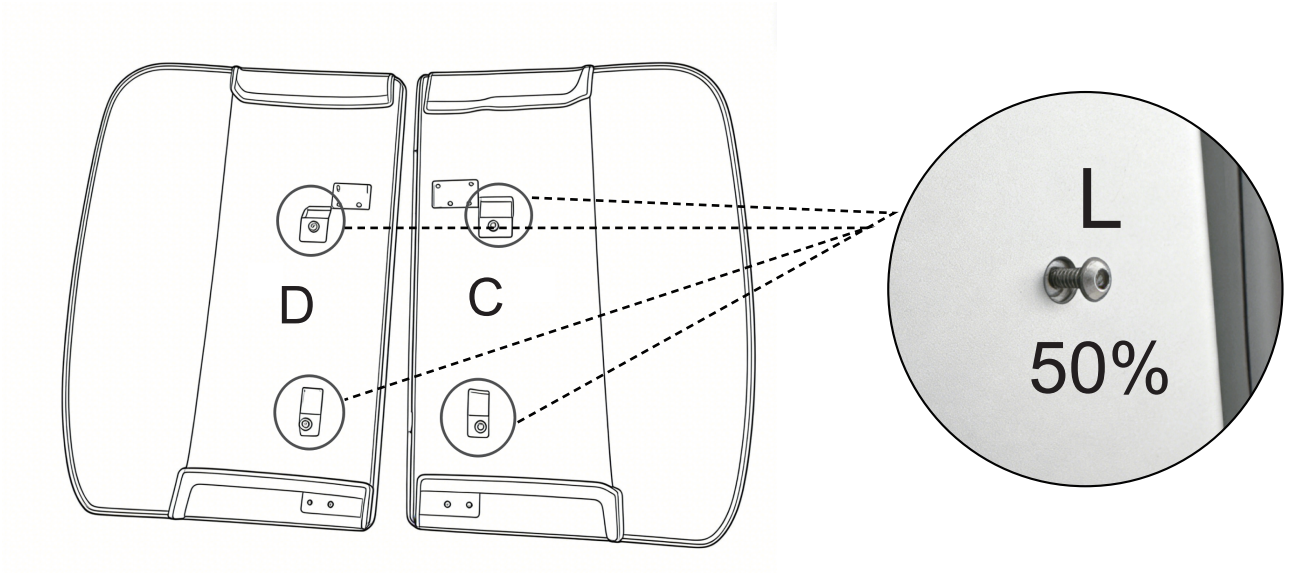

Step 5

Slide the 50% exposed screws (L) of the armrest (C&D) into the rails of the assembled telescopic iron frame (see enlarged detail view)

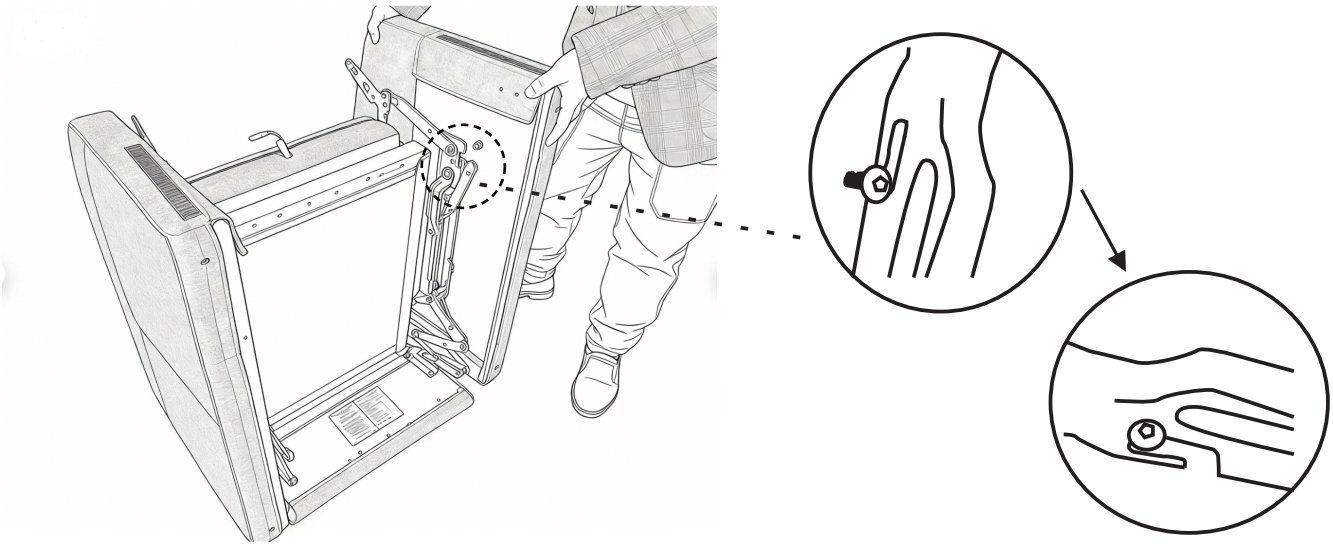

Step 6

Use four 6*20 screws (K) to fasten the crossbeam metal frame (G) to the left and right armrests (C & D). Before assembly, please ensure that all the fabric holes on the sides and bottoms of the armrests are aligned with the holes on the frame. Then, screw the four leveling feet (J) into the base.

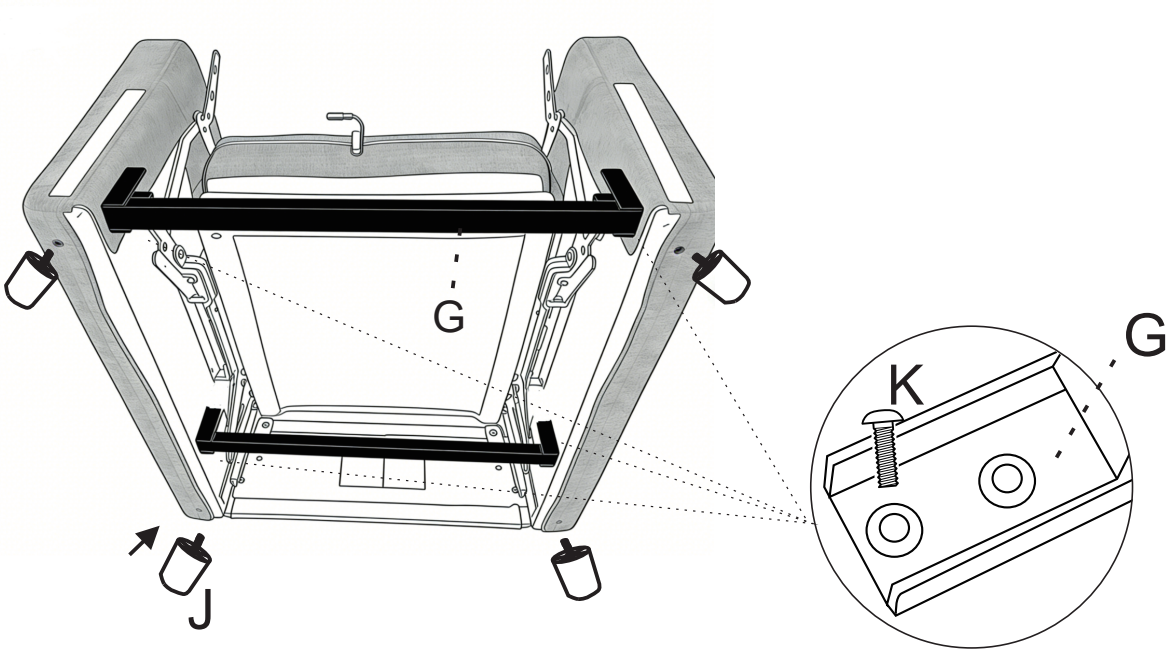

Step 7

Carefully open the compressed bag of the backrest and take out the backrest. Insert the backrest frame (F) into the backrest cushio n (A).

After installation, first route the wires from the bottom around the backrest structure (F), thread them through the opening, and position them externally. Finally, zip up the zipper.

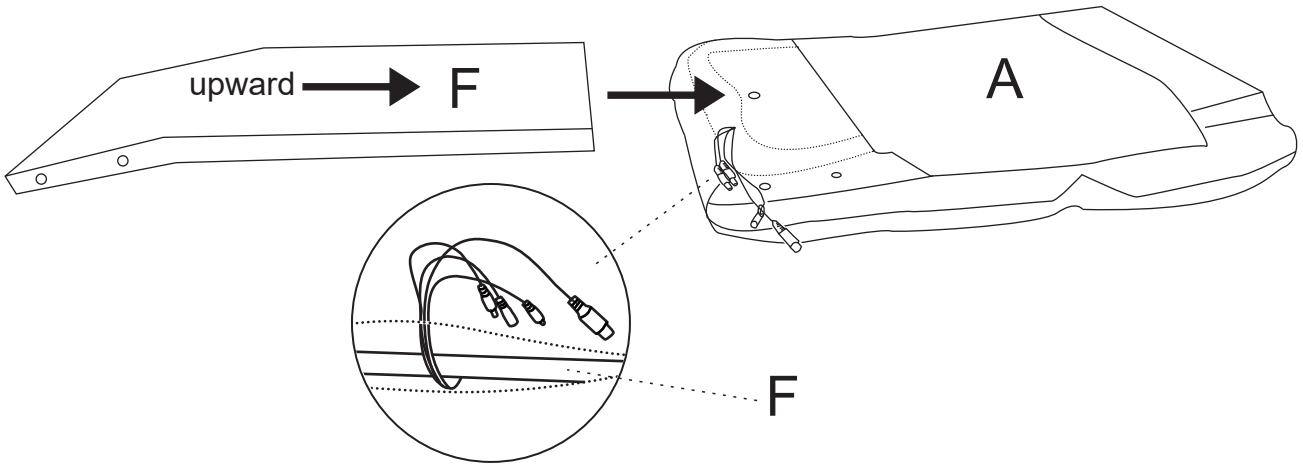

Step 8

Use four 6*20 screws (K) to attach the insertion plates (I) to both sides respectively. Please note the orientation of the insertion plates during installation.

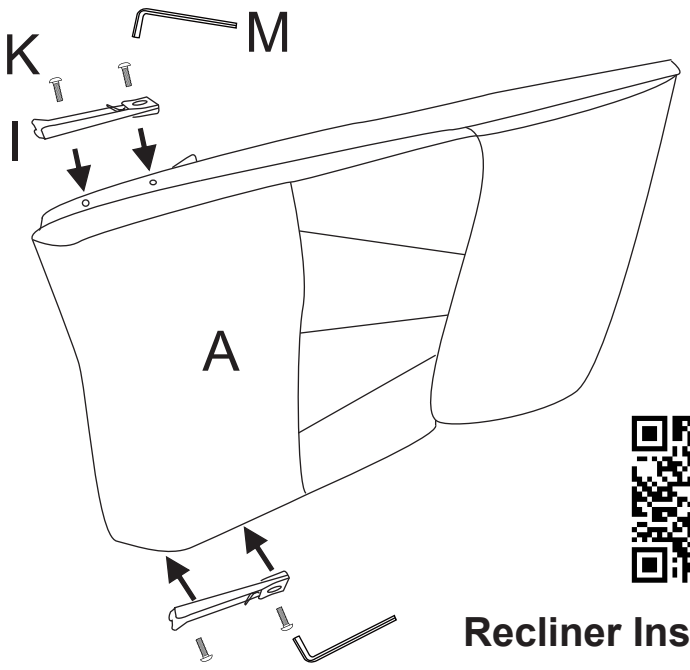

Recliner Installation Video

Step 9

Connect the backrest to the base until a click sound is heard, indicating a secure connection.

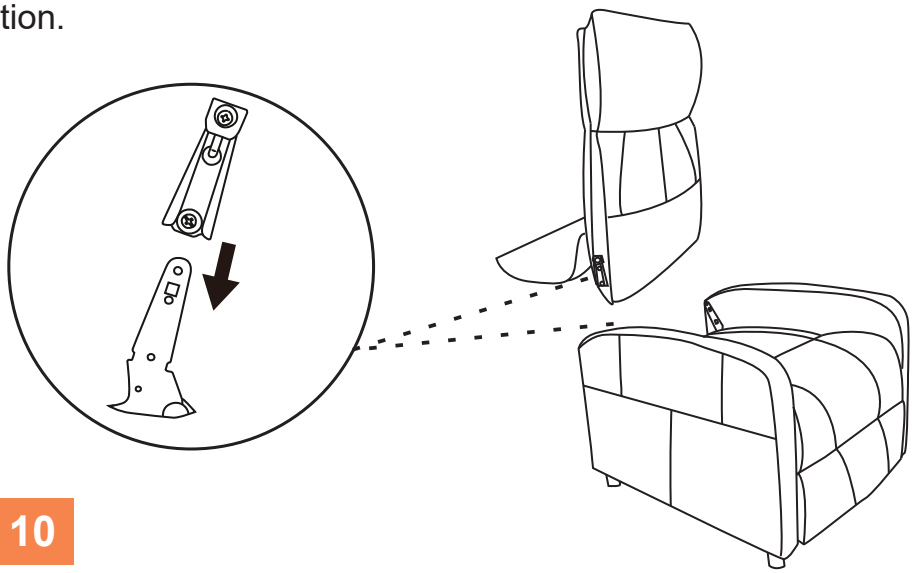

Step 10

No.1 and No.2 wires connect with the backrest and chair base.

No.3 wire connects with the backrest and power Plug (N).

No.4 wire connects with backrest and remote control (O).

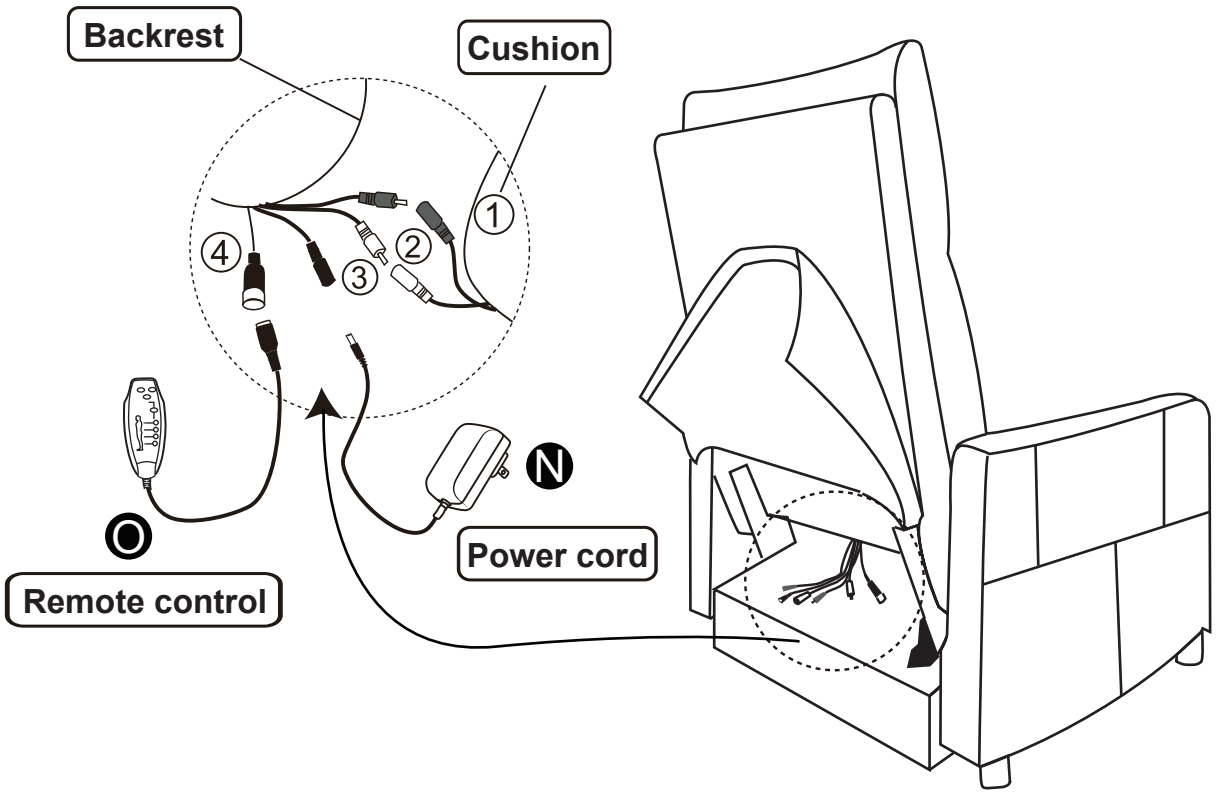

How to recline?

Sit deeper in the chair, put your hands on the armrests, lie down, and use both hands and back strength to recline.

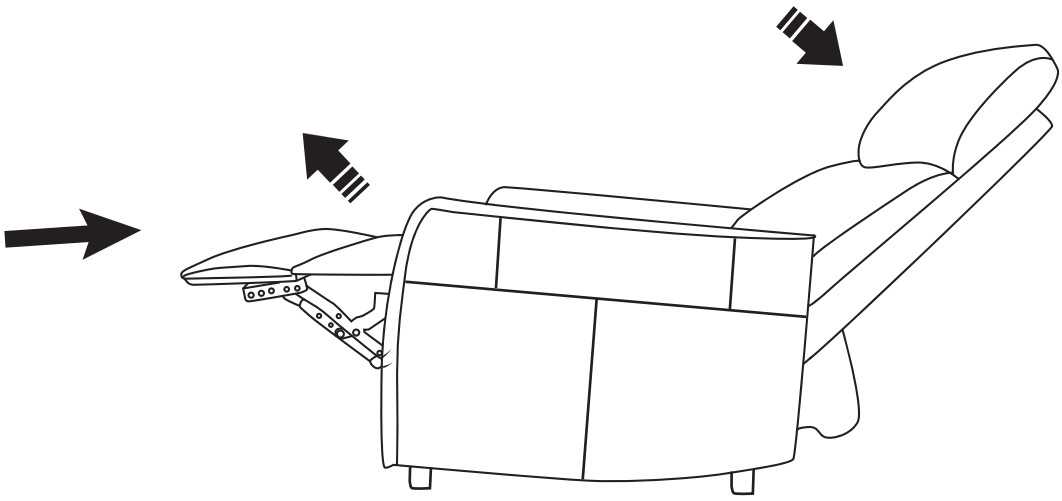

How to get footrest latch down?

Press the bottom of the footrest quickly with some strength (with feet) and try times to get the footrest latch down.

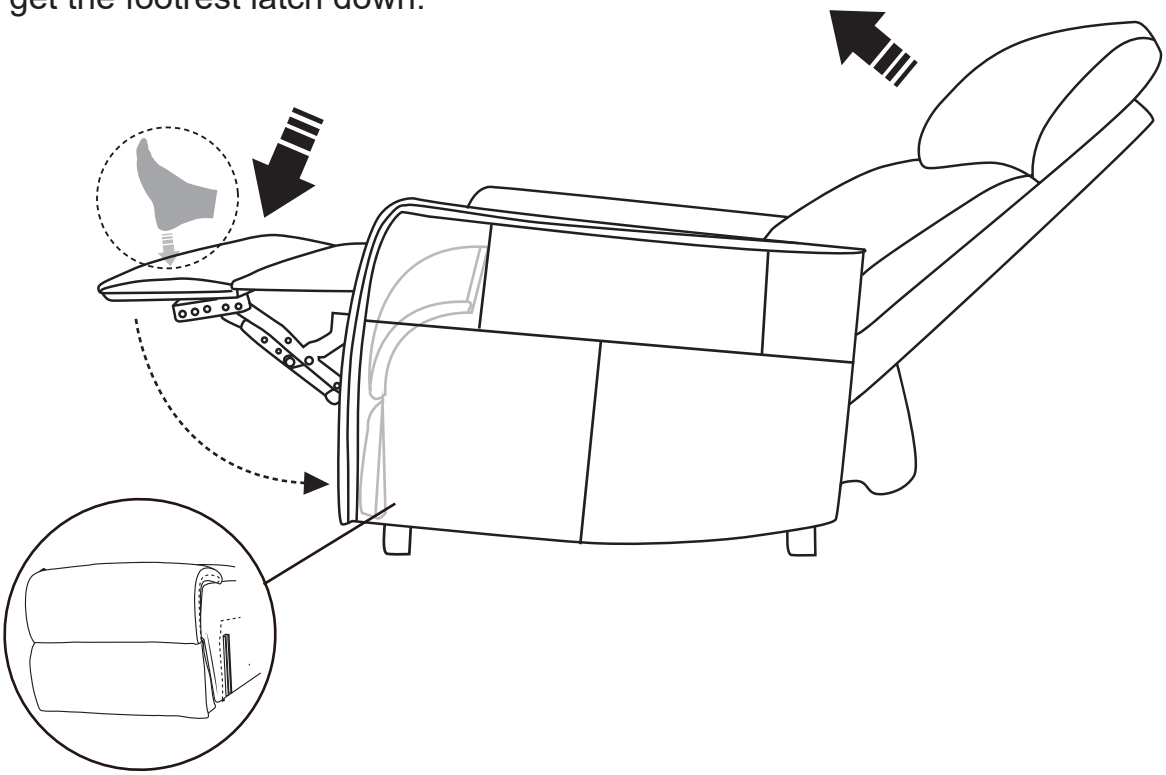

How to use remote control?

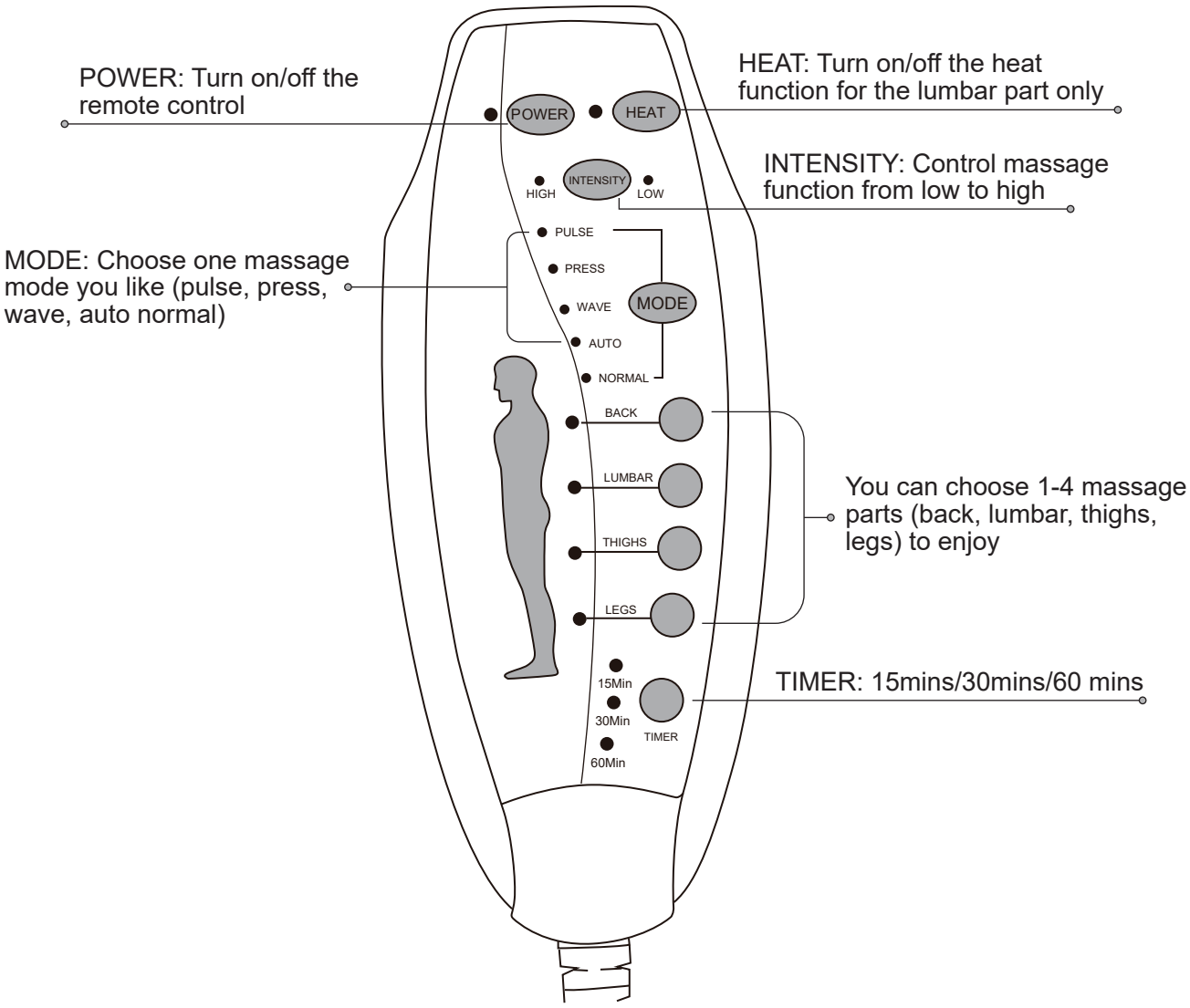

⚠ NOTE

1: When the time you choose is reached, it will automatically stop working.
2: DO NOT use for more than 60 minutes of continuous use.
3: When the heat reaches 60°C, it will automatically stop workding.
4: When using the rotation function, be careful not to get tangled with the power cord of the remote control.

Frequently Asked Questions

Q1: Missing parts when receiving

A: If you find some parts are missing from the box, please send to our after-sales email (comfortrecliner@yeah.net) to let us know the name of the missing part in relation to the Package list page of instructions. We will send you are placement as soon as possible.

Q2: Some parts were damaged on arrival.

A: Please send us clear photos of the damaged part as an attachment, we will check and offer you the best solution as soon as possible.

Q3: The chair is stuck in the reclining position and does not respond when I pull the handle.

A: Please contact us and send clear photos or videos of the damage to our after-sales email (comfortrecliner@yeah.net), and we will offer you the best solution as soon as possible.

Q4: What is weight limit?

A: 300LBS/136KG

Q5: Stopped working!

A: When the time you choose is reached, it will automatically stop working.
A: When the heat reaches 60°C, it will automatically stop working.
A: Ensure the external transformer is plugged into a properly wired electrical outlet.
A: Check the circuit breaker box connected to the electrical outlet to ensure the outlet is receiving power.

UK REP
Name: Sea&Mew Accounting Ltd
Address: Electric Avenue Vision 25, London, Enfield, EN3 7GD
Contact Person: Billy Han
E-mail: info@seamew.net
Tel: +44 7399648608

EC REP
Name: Sea& Mew Consulting GmbH
Address: Mittenhuber Straße 4, 92318, Neumarkt
Contact Person: Yuan Li
Email: Compliance.EU@ outlook.com
Tel: +4915224685061

Recliner Installation Video