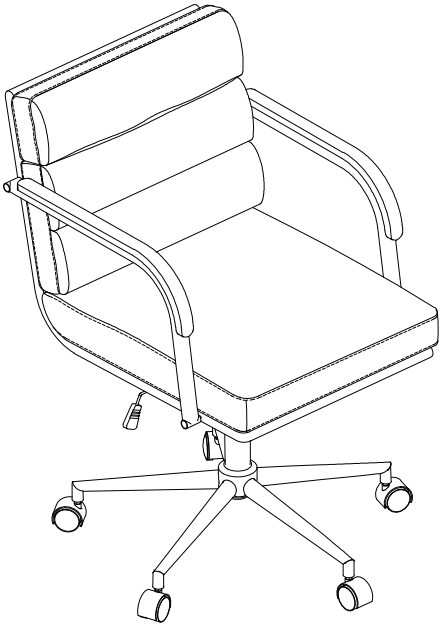

ITEM NO.OFM0868

NOTE:

This brochure contains IMPORTANT safty info. Please read and keep for future reference.

MAINTAINANCE AND WARNING

1.Keep furniture away from heat sources.

2.Do not clean furniture with harsh cleaner or polishes.Do not use detergents,solvents,abrasives,spray packs or leather cleaner. Use non-color mild soa with warm water to clean spills(Mix 1:10 soap to water).

3.Do not place furniture under direct sunlight,material will possibly fade over time.

4.Do not use on site dry cleaning machine.Children should not climb or jump on the furniture.

5.Do not write on furniture that is not protectedby a padded barrier.

6.Not for commercial use,only for residential use.

Weight Limitation

250 LBS

PARTS LIST

A	x1
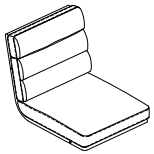	
Seat	

B	x1
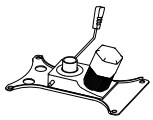	
Mechanism	

C	x2
Arm	

D	x1
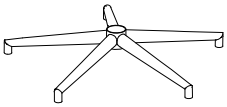	
Spider base	

E	x1
Metal base cap	

F	x5
Casters	

G	x1
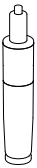	
Gas lift	

HARDWARE LIST

#1	x4
ϕ6x20mm	

#2	x4
ϕ8x30mm	

#3	x4

#4	x1
M6	

HARDWARE SPARE LIST

#1	x1
ϕ6x20mm	

#2	x1
ϕ8x30mm	

ASSEMBLY INSTRUCTIONS

STEP-1

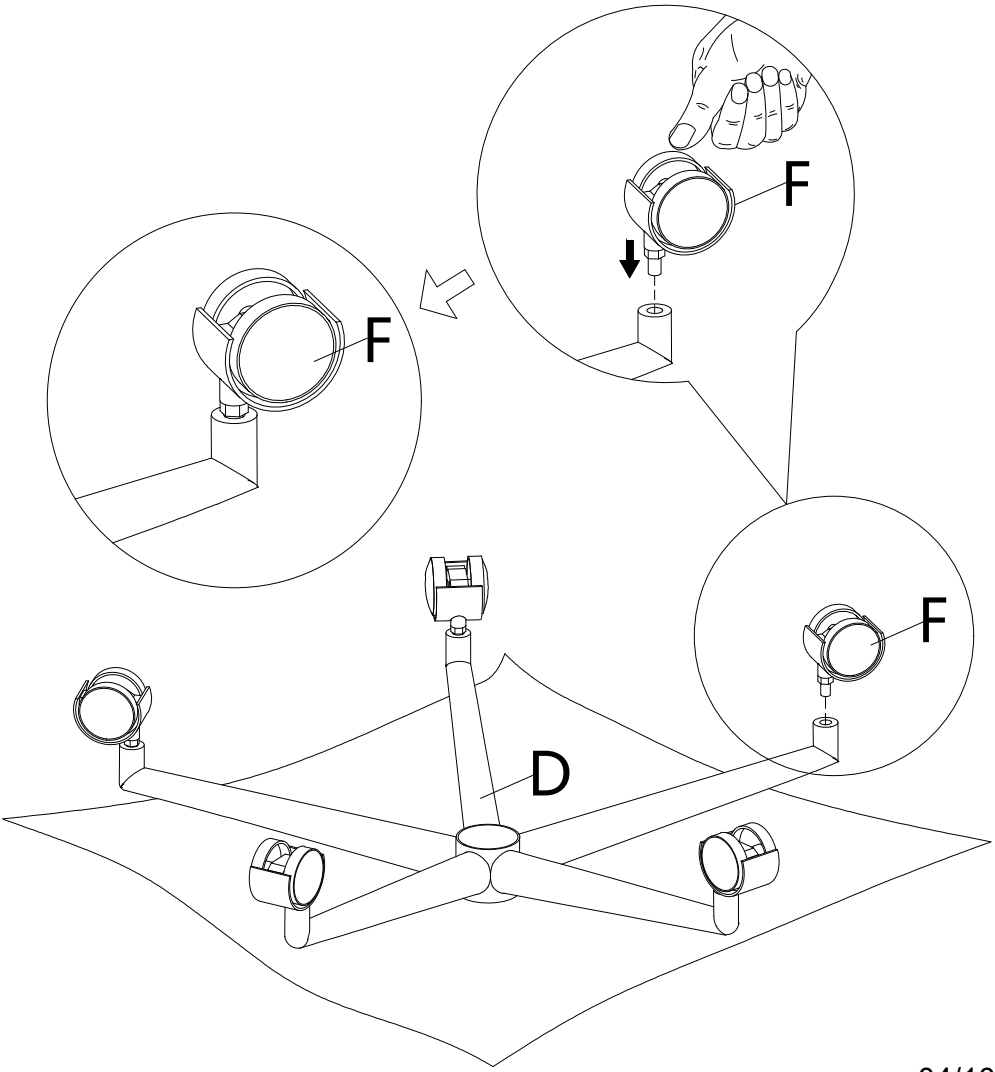

ASSEMBLY INSTRUCTIONS

STEP-2

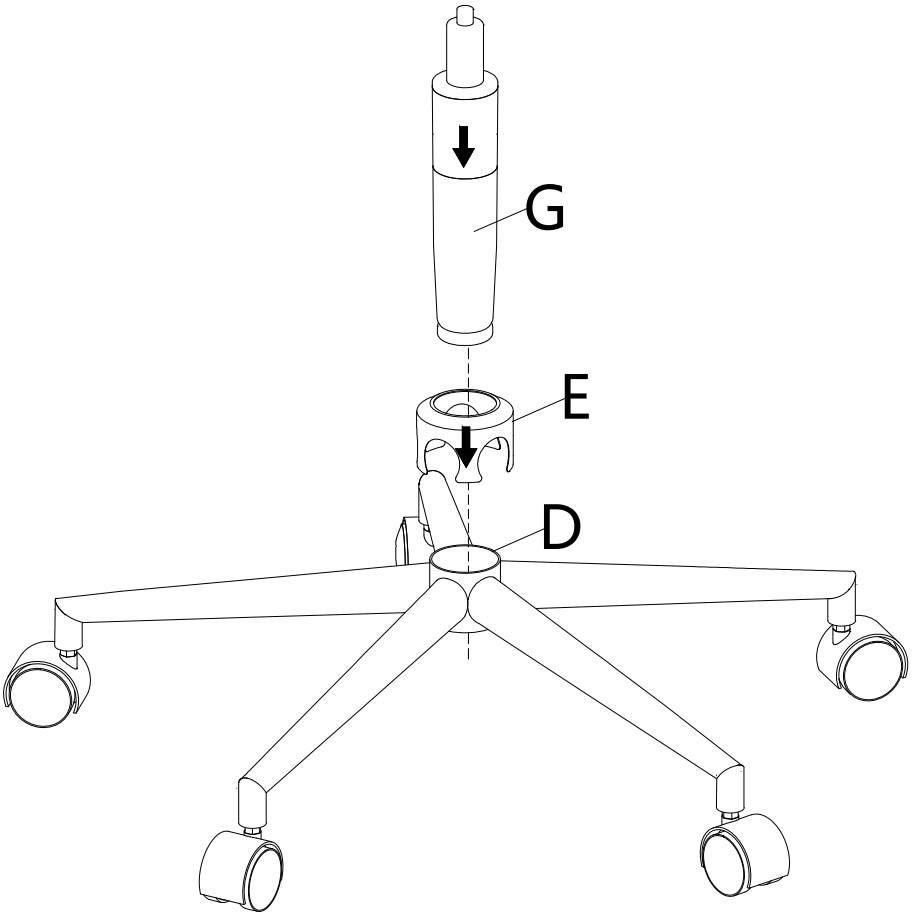

ASSEMBLY INSTRUCTIONS

STEP-3

#1	x4
ϕ6x20mm	

#4	x1
M6	

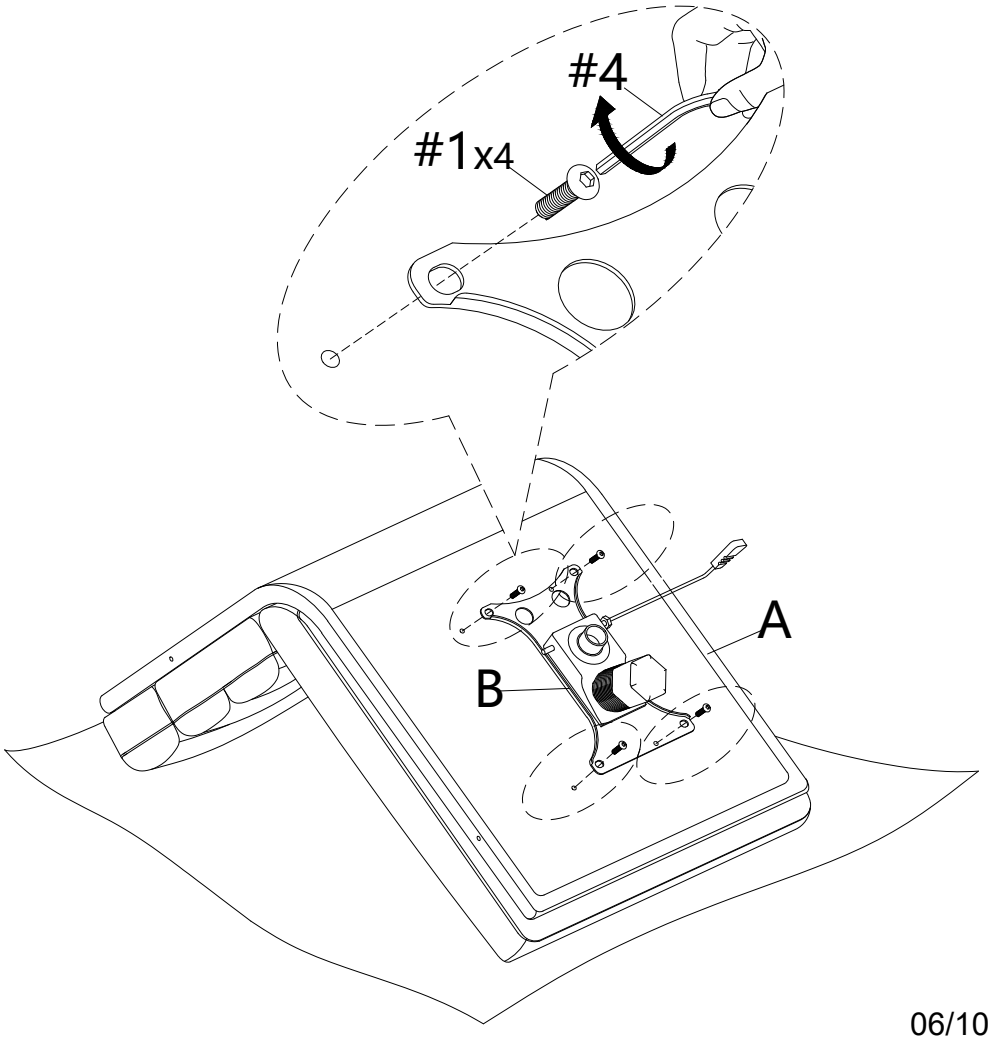

06/10

ASSEMBLY INSTRUCTIONS

STEP-4

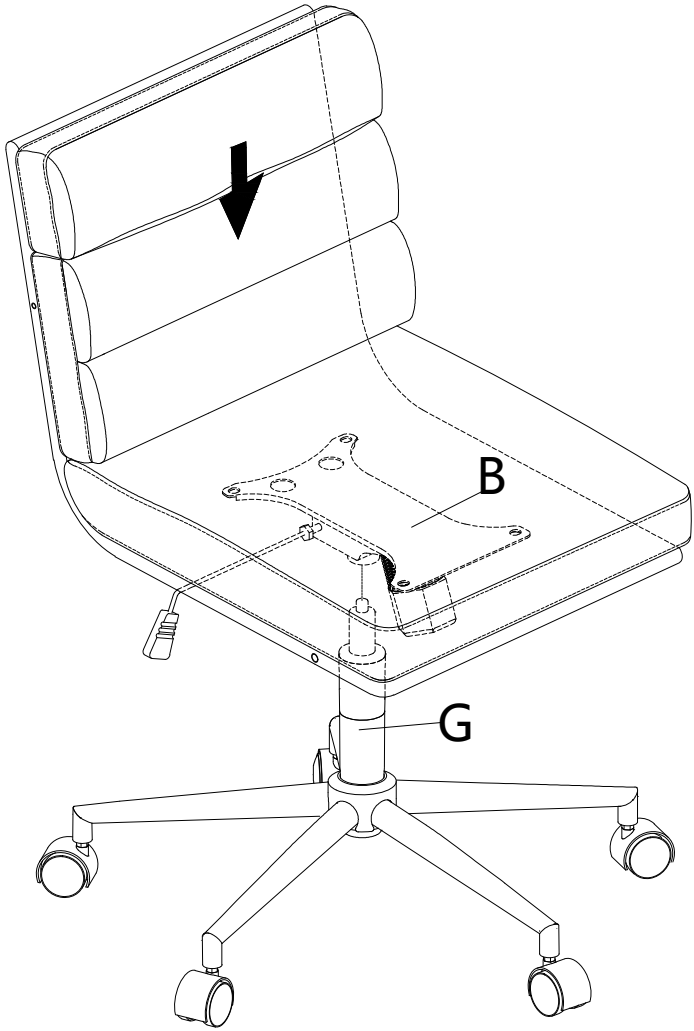

ASSEMBLY INSTRUCTIONS

STEP-5

#2	x4
ϕ8x30mm	

#4	x1
M6	

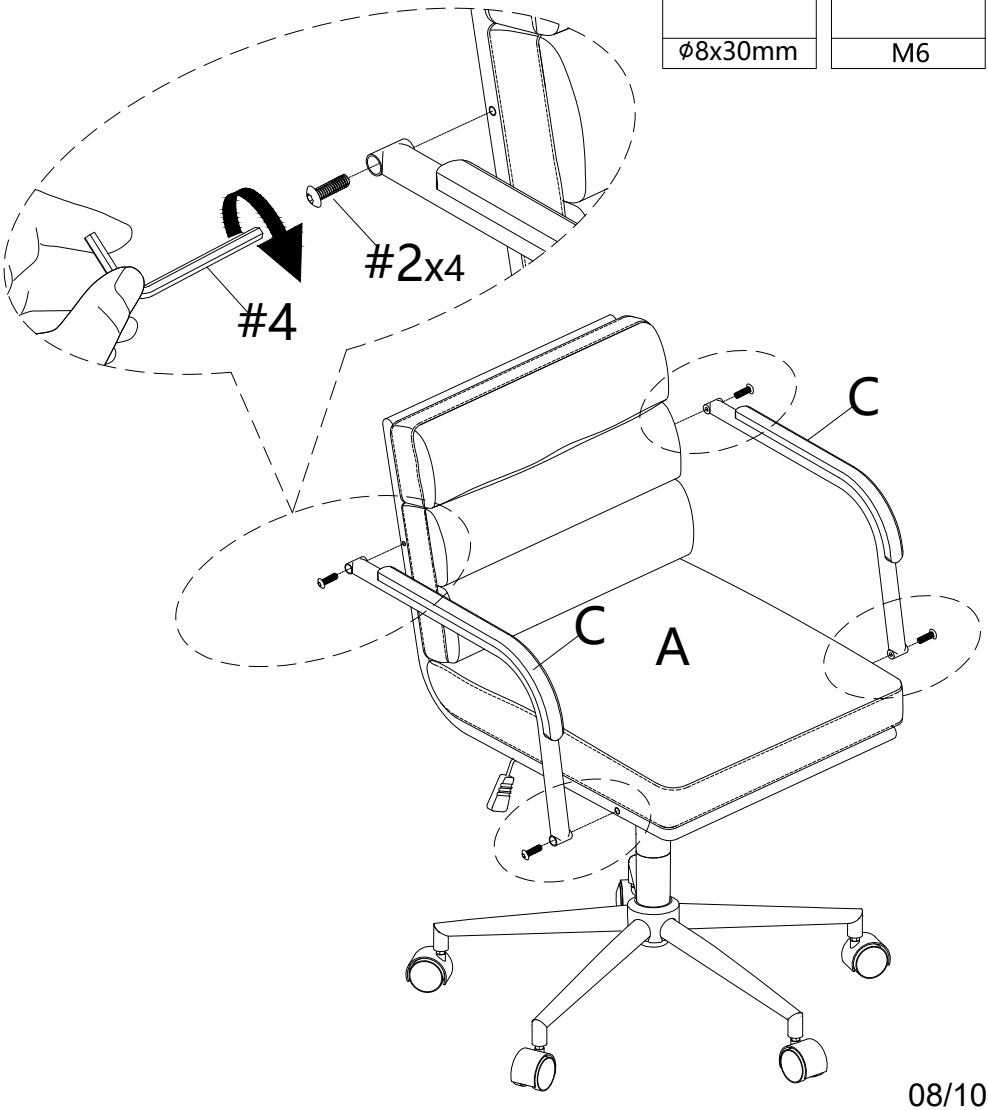

08/10

ASSEMBLY INSTRUCTIONS

STEP-6

#3	x4

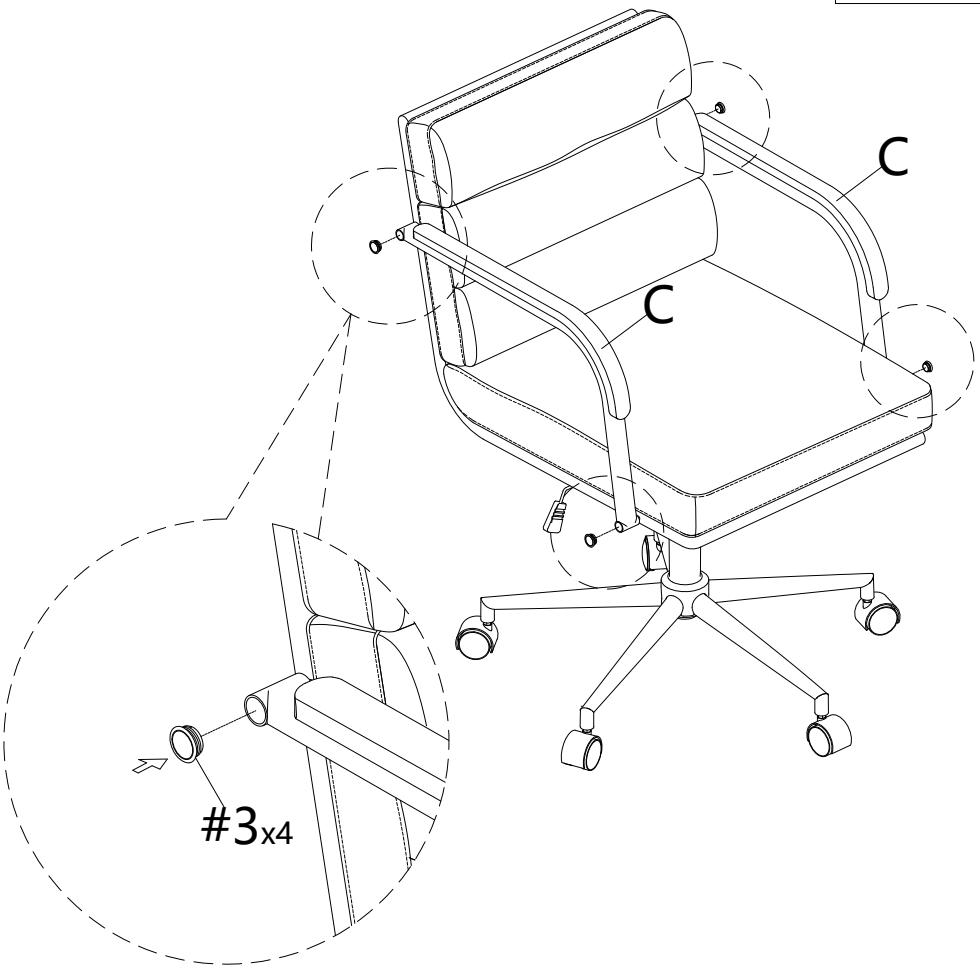

WARRANTY

1. We strive to offer high-quality products,and we also try our best to satisfy each and every customer that orders from us with product or service as needed.

2. We provide 30 days warranty starting from the time you receive the item.Each customer must provide a record of their order such as the order number,or item receipt for any items that are out of the warranty period you may also still receive.

3. Replacement parts by purchasing them with our company if they are available.

Are you having difficulty
With assembly?Missing parts?
Please send email with your order No to
customerservice@hulalahome.com
For return,please check the return policy with
the retailer or market place you bought from.

Appreciate your purchasing from us.
Pop up your life by our furniture piece!