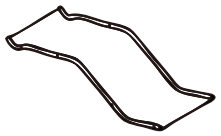					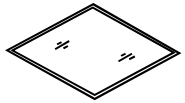	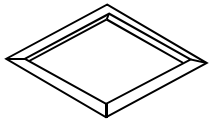	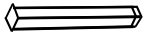
AX2PCS	BX4PCS	CX4PCS	DX6PCS	EX4PCS	LX1PC	MX1PC	NX4PCS
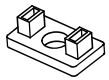	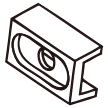		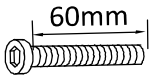	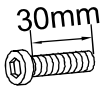	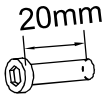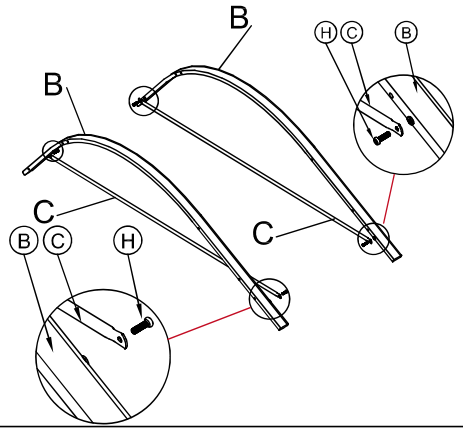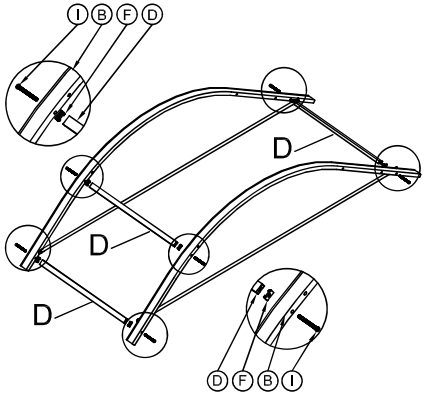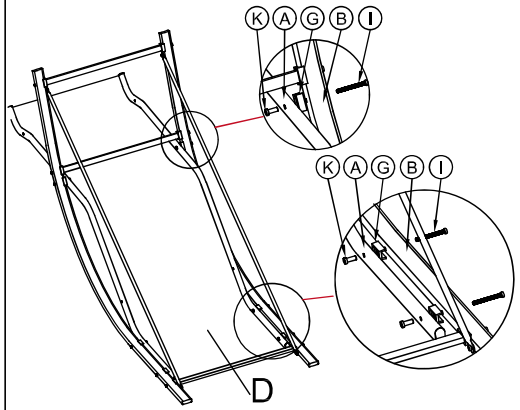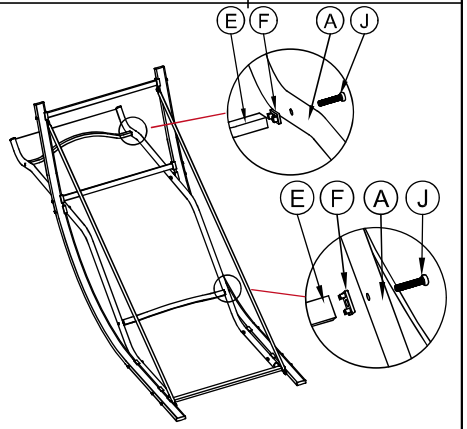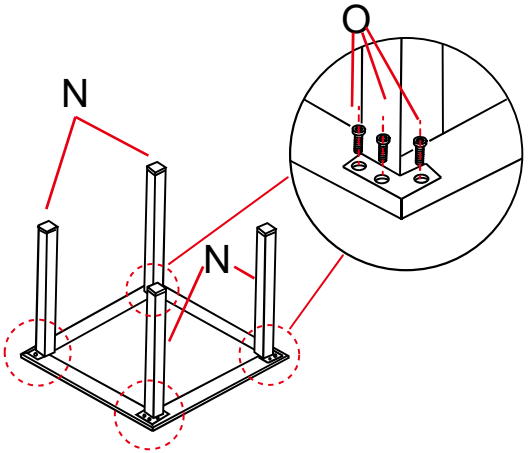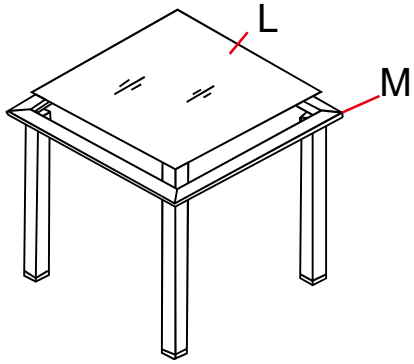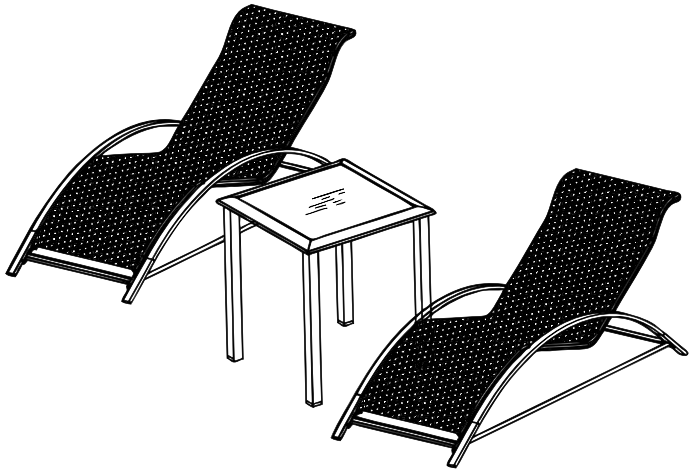		
FX20PCS	GX12PCS	HX8PCS	IX24PCS	JX8PCS	KX12PCS	PX2PCS	OX12PCS