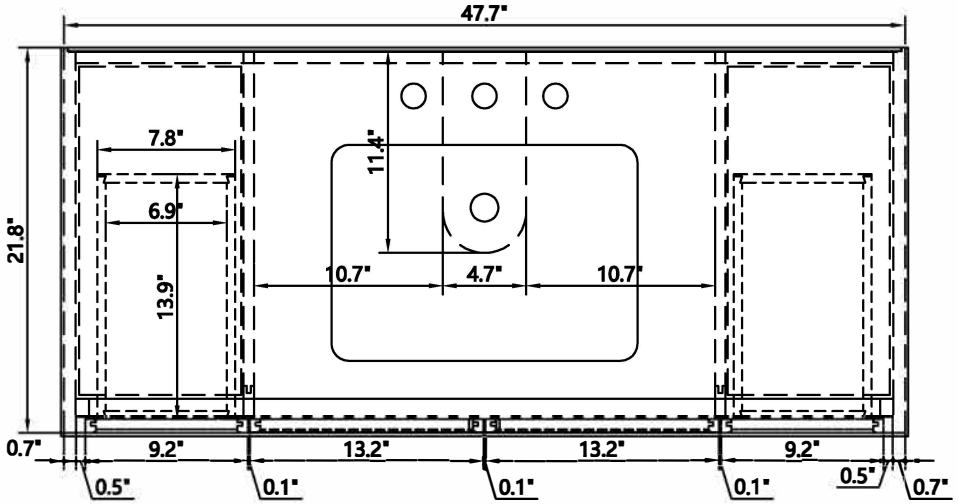
47.7"
7.8"
6.9"
11.4"
21.8"
13.9"
10.7"
4.7"
10.7"
0.7"
9.2"
13.2"
13.2"
9.2"
0.5"
0.1"
0.1"
0.1"
0.5"
0.7"

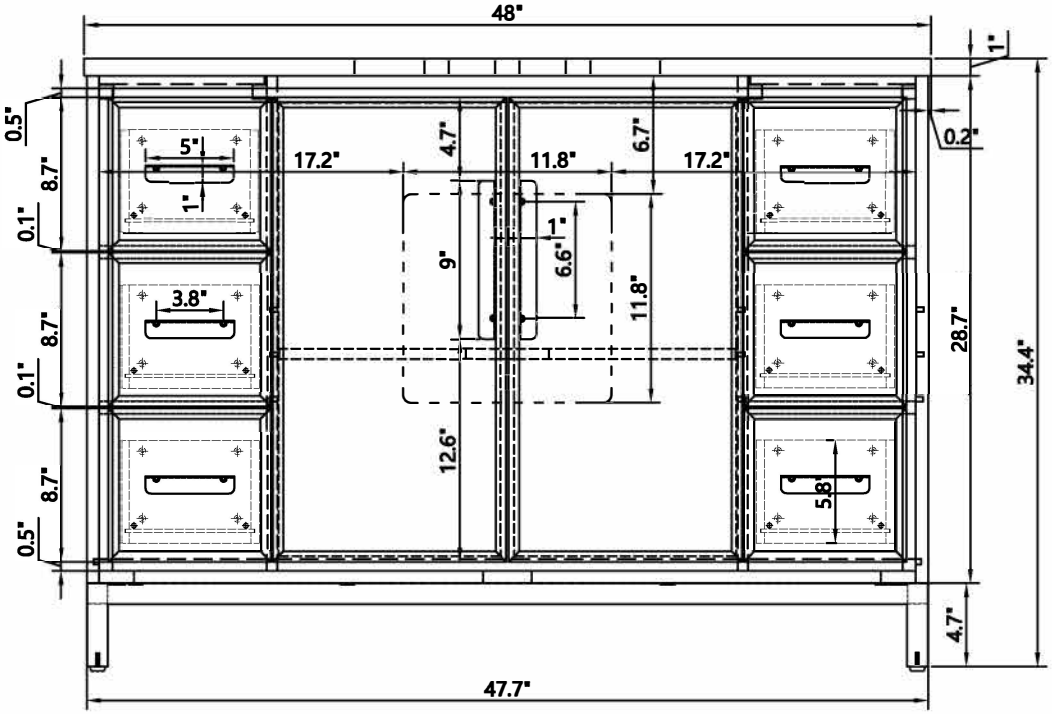
48"
1"
0.5"
8.7"
0.1"
8.7"
0.1"
8.7"
0.5"
5"
1"
3.8"
17.2"
4.7"
11.8"
6.7"
17.2"
9"
1"
6.6"
11.8"
12.6"
5.8"
0.2"
28.7"
34.4"
4.7"
47.7"

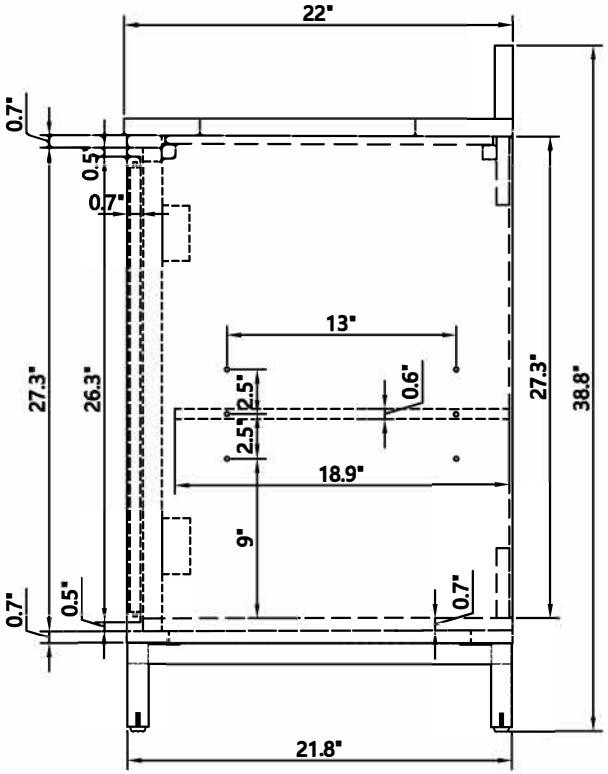
22"
0.7"
0.5"
0.7"
13"
0.6"
27.3"
26.3"
2.5"
2.5"
27.3"
38.8"
18.9"
9"
0.7"
0.5"
0.7"
21.8"

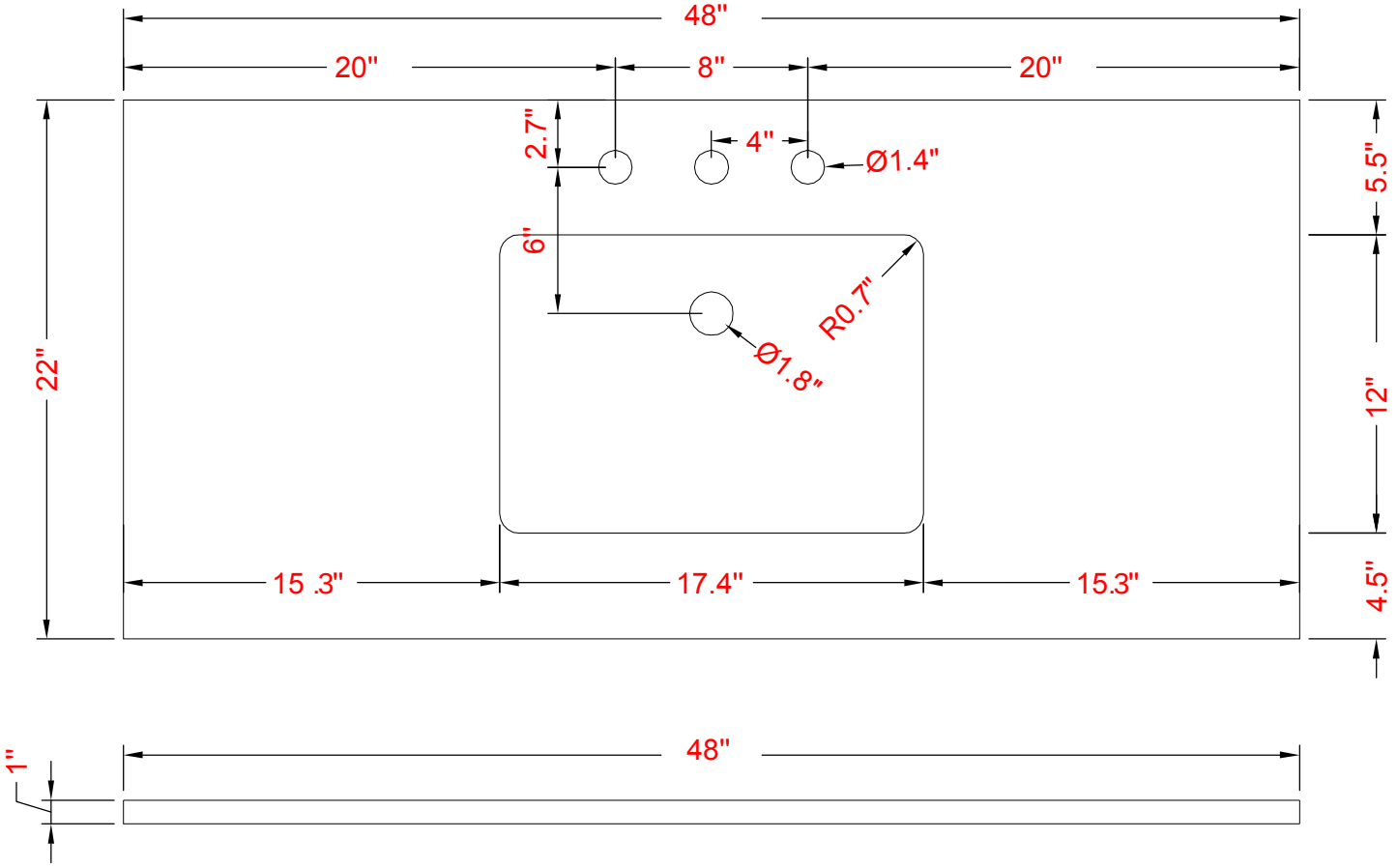
48"
20"
8"
20"
2.7"
4"
Ø1.4"
5.5"
6"
R0.7"
Ø1.8"
22"
12"
15 .3"
17.4"
15.3"
4.5"
48"
1"

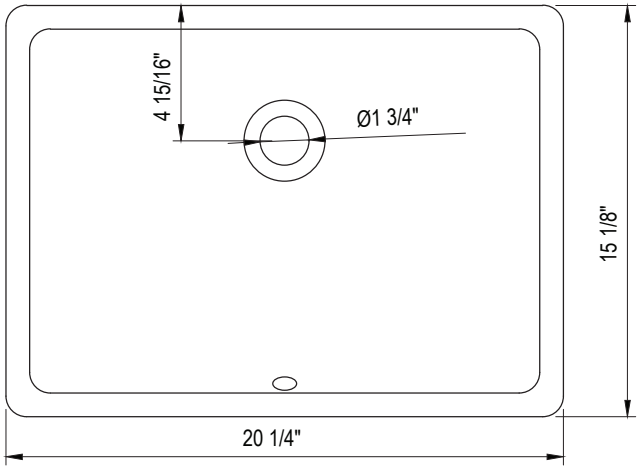
4 15/16"
Ø1 3/4"
15 1/8"
20 1/4"

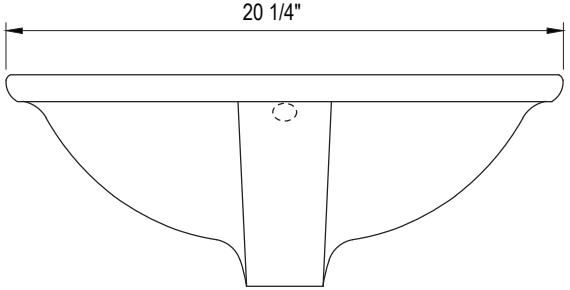
20 1/4"

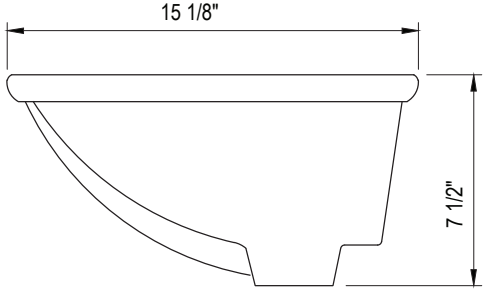
15 1/8"
7 1/2"