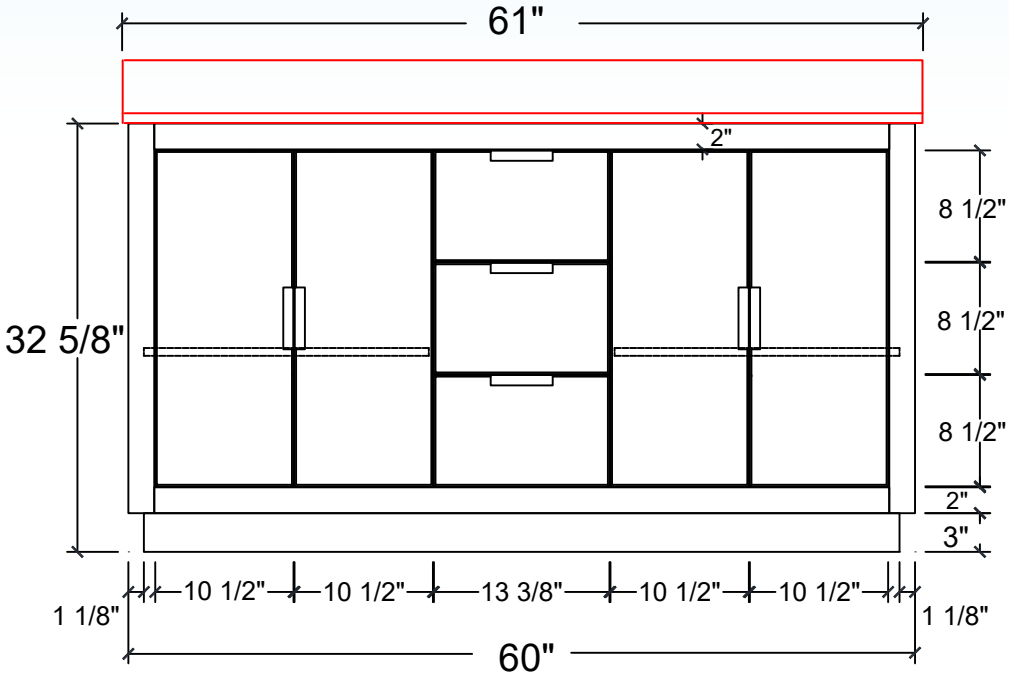
61"
2"
8 1/2"
8 1/2"
8 1/2"
32 5/8"
2"
3"
1 1/8"
10 1/2"
10 1/2"
13 3/8"
10 1/2"
10 1/2"
1 1/8"
60"

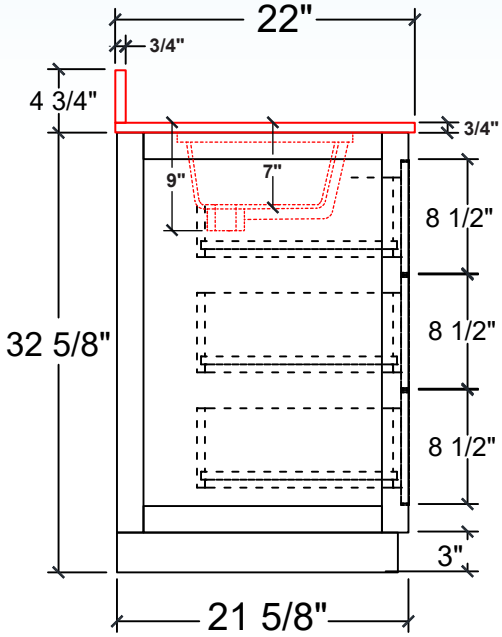
22"
3/4"
4 3/4"
3/4"
9"
7"
8 1/2"
8 1/2"
8 1/2"
32 5/8"
3"
21 5/8"

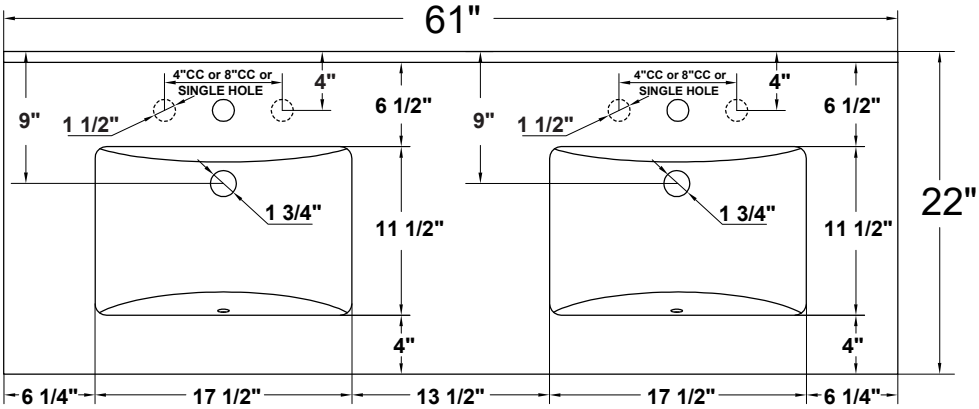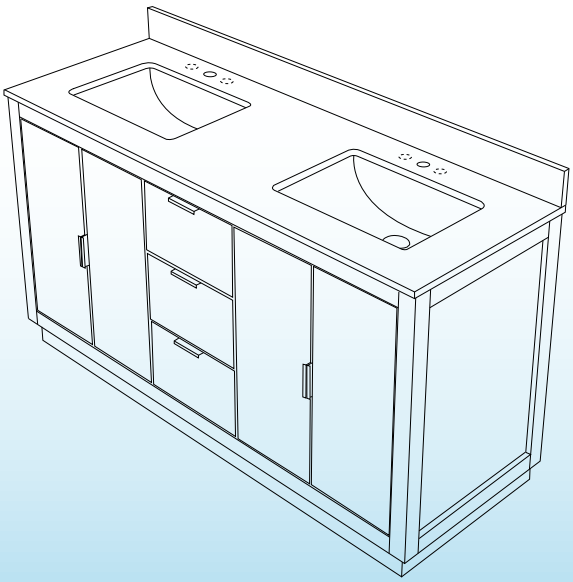
61"
4"CC or 8"CC or
SINGLE HOLE
4"
6 1/2"
9"
1 1/2"
1 3/4"
11 1/2"
4"
4"CC or 8"CC or
SINGLE HOLE
4"
6 1/2"
9"
1 1/2"
1 3/4"
11 1/2"
4"
22"
6 1/4"
17 1/2"
13 1/2"
17 1/2"
6 1/4"