ASSEMBLY INSTRUCTIONS

SKU CODE

W1580S00721 - W1580S00724
W1580S00725 - W1580S00726

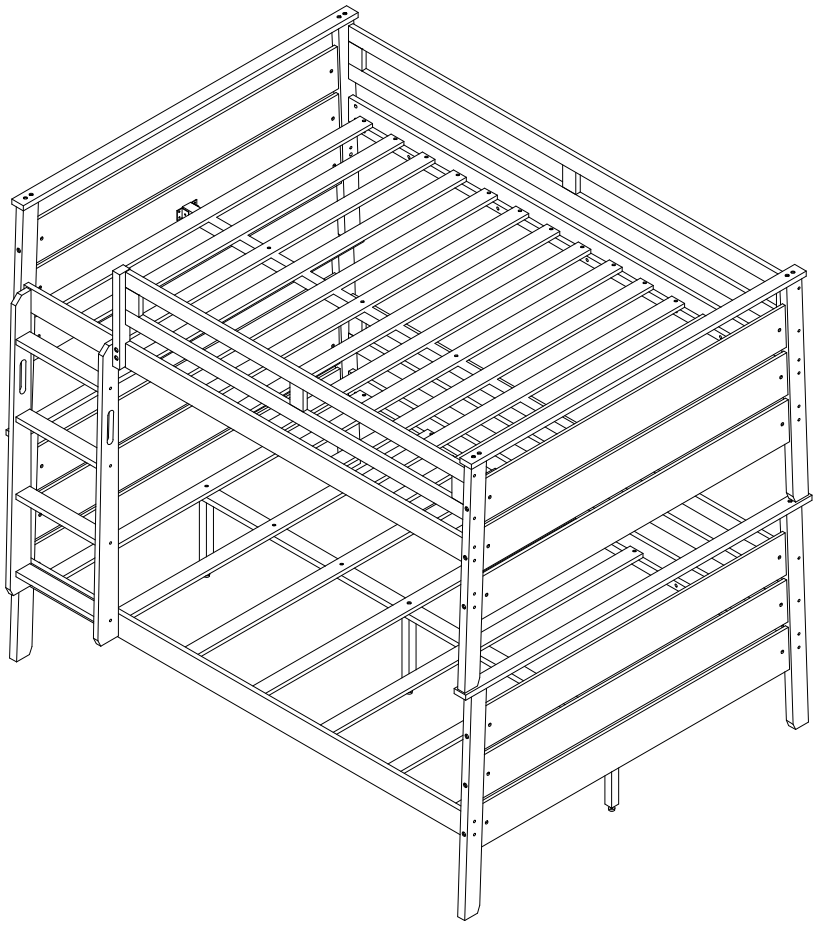

SAFETY WARNINGS

1. this bed is designed for use only mattress (es) meeting the following specifications on the upper bunk:
   upper bunk (bunk bed and tribed included)

bed type	**length**	**width**	thickness
full standard	74" - 75"	53 $\frac{1}{2}$" - 54 $\frac{1}{2}$"	6" max
queen standard	79" - 80"	59 $\frac{1}{2}$" - 60 $\frac{1}{2}$"	6" max

2. replacement parts, including additional guardrails, maybe obtained from any of our (gigacloud technology (usa) inc. 4388 shirley avenue el monte, ca 91731) dealers
3. follow the information on the warnings appearing on the upper bunk bed end structure and on the carton. do not remove warning label from bed.
4. always use the recommended size mattresses or mattress supports, or both, to help prevent the likelihood of entrapment or falls.
5. surface of mattress must be at least 5" (127mm) below the upper edge of guardrails.
6. do not allow children under 6 years of age to use the upper bunk.
7. periodically check and ensure that the guardrail, ladder, and other components are in their proper position, free from damage, and that all connectors are tight.
8. do not allow horseplay on or under the bed and prohibit jumping on the bed.
9. always use the ladder for entering and leaving the upper bunk.
10. do not use substitute part. contact the manufacture or dealer for replacement part.
11. use of a night light may provide added safety precaution for a child using the upper bunk.
12. always use guardrails on both long sides of the upper bunk. if the bunk bed will be placed next to the wall, the guardrail that runs the full length of the bed should be placed against the wall to prevent entrapment between the bed and wall.
13. the use of water or sleep flotation mattresses is prohibited.
14. strangulation hazard - never attach or hang items to any part of the bunk bed that are not designed for use with the bed; for example, but not limited to, hook, belts and jump ropes.
15. keep these instruction for future reference.
16. prohibit more than one person on upper bunk
17. we recommend assembling your bunk bed on the shipping carton to protect your floor or carpet.
18. be certain all staples are out of the box before beginning assembly on the shipping carton.

SAFETY WARNINGS

1. at the beginning :
   tighten all hardware.
   check metal parts for rust. if found, sand and repaint using a non-lead-based paint meeting the requirements of 16 cfr 1303.
   check all wood members for deterioration and splinters. sand down splinters and replace deteriorating wood members.
   rake and check depth of loose fill protective surfacing materials to prevent compaction and to maintain appropriate depth. replace as necessary.
2. twice a month
   tighten all hardware.
   rake and check depth of loose fill protective surfacing materials to prevent compaction and to maintain appropriate depth. replace as necessary.
3. owners shall be responsible for maintaining the legibility of the warning labels.
4. disposal instructions-
   there shall be instructions advising the owner to disassemble and dispose of the playground equipment in such a way that no unreasonable hazards will exist at the time the playground equipment is discarded.
5. the instructions shall also include the information found in section 4 of the united states consumer product safety commission's (uscpsc) outdoor home playground safety handbook or specific surfacing guidelines for the product consistent with the uscpsc handbook. a copy of this section may be found in appendix x2.
6. observing the following statements and warnings reduces the likelihood of serious or fatal injury.
7. specifying the number and weight of occupants that may safely use the equipment singly or simultaneously,
8. recommending on-site adult supervision for children of all ages,
9. warning the owner to instruct children not to use the equipment in a manner other than intended,
10. warning the owner to instruct children not to get off equipment while it is in motion,
11. warning the owner not to allow children to wear inappropriate items, such as but not limited to, loose fitting clothing, hood and neck drawstrings, scarves, cord-connected items, capes and ponchos. these items can cause death by strangulation.
12. warning the owner to instruct children not to climb when the equipment is wet.
13. warning the owner to instruct children not to attach items to the playground equipment that are not specifically designed for use with the equipment, such as, but not limited to, jump ropes, clothesline, pet leashes, cables and chain as they may cause a strangulation hazard
14. warning the owner to instruct children to remove their bike or other sports helmet before playing on the playground equipment.
15. warning the owner to dress children with well-fitting and full foot enclosing footwear. examples of inappropriate footwear are clogs, flip flops, and sandals.
16. place the equipment on level ground, not less than 6 ft (1.8 m) from any structure or obstruction such as a fence, garage, house, overhanging branches, laundry lines, or electrical wires
17. do not install home playground equipment over concrete, asphalt, packed earth, grass, carpet, or any other hard surface. a fall onto a hard surface can result in serious injury or death to the equipment user
18. to prevent serious injury, cautionary statements shall be included which warn that children must not use the equipment until properly installed.

ASSEMBLY INSTRUCTIONS

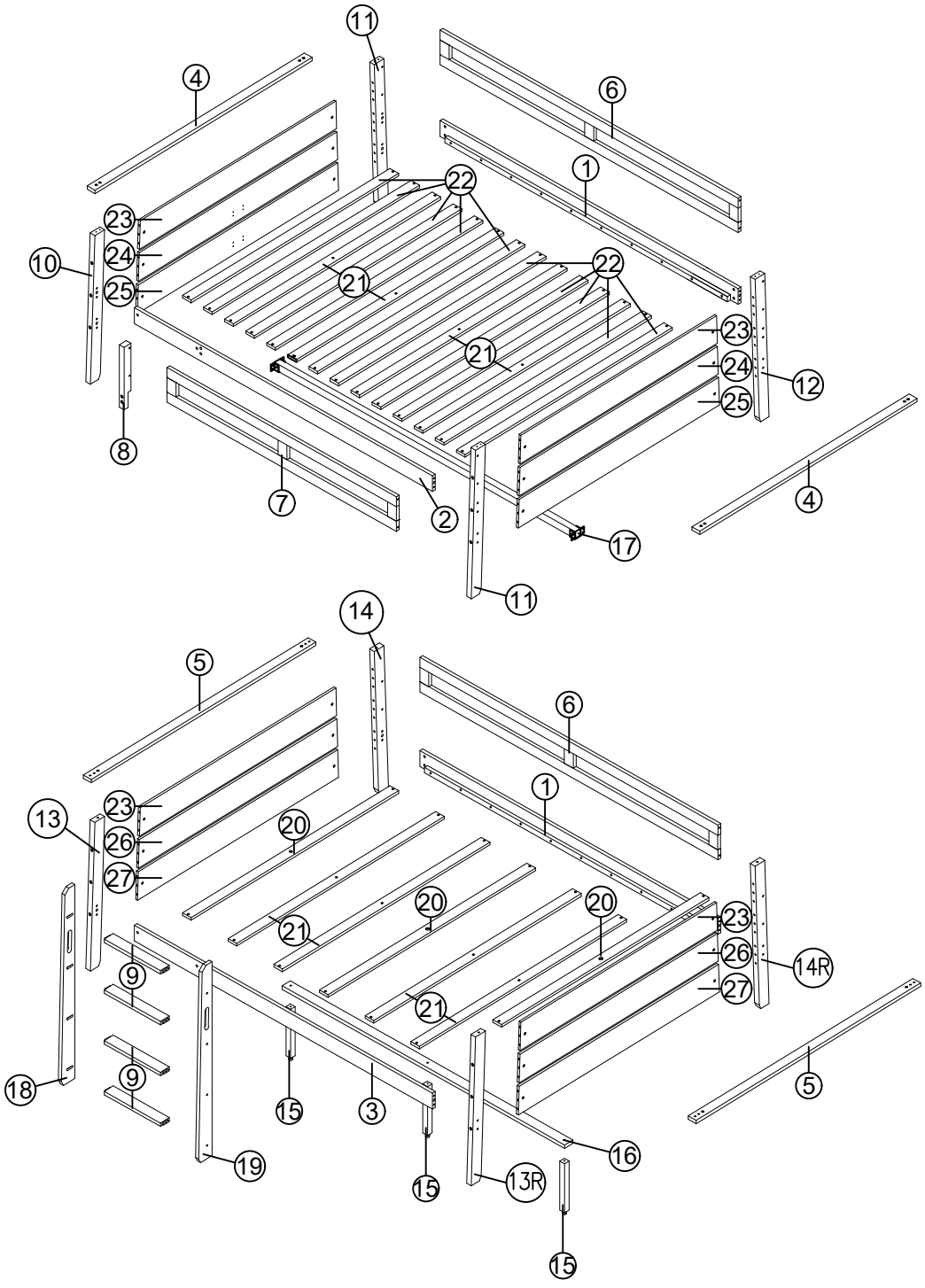

PART LIST
(1580P544351F-AAK-1 / 1580P544362F-AAMM-1)
(1580P548672Q-AAK-1 / 1580P548676Q-AAMM-1)

1	Rear side rail (both upper and lower sections) : 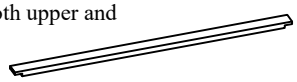	2pcs
2	Upper front side rail : 	1pc
3	Lower front side rail : 	1pc
4	Top/bottom rail of the upper bunk bed : 	2pcs
5	Headboard/footboard of the bottom bunk : 	2pcs
6	Rear side protection bars (both upper and lower) : 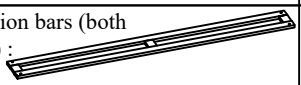	2pcs
7	Upper front side protection bar : 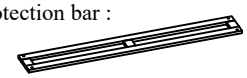	1pc
8	Railing handrail : 	1pc
9	Hierarchical : 	4pcs
10	Front-left support post upper bunk : 	1pc

11	Front-right & rear-left support posts for the upper bunk : 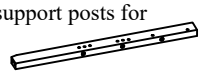	2pcs
12	Rear right support leg of the upper bunk : 	1pc
13	Left Front Support Legs (Bottom Bunk) : 	1pc
14	Left Rear Support Legs (Bottom Bunk) : 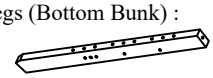	1pc
15	Center support leg for the bottom bunk : 	3pcs
16	Center support rail for the lower bunk bed slats : 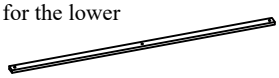	1pc
17	Center support rail for the upper bunk bed slats : 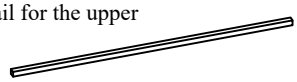	1pc
18	Left Pillar Ladder : 	1pc
19	Right Pillar Ladder : 	1pc
20	Lower bed slats : 	1pc
13R	Right Front Support Legs (Bottom Bunk) : 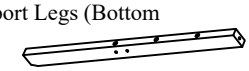	1pc
14R	Right Rear Support Legs (Bottom Bunk) : 	1pc

PART LIST
(1580P544352F-AAK-2 / 1580P544363F-AAMM-2)
(1580P548675Q-AAK-2 / 11580P548677Q-AAMM-2)

20	Lower bed slats : 	2pcs	24	Headboards and footboards for the upper middle tier : 	2pcs
21	Top & Bottom Bed Slats : 	8pcs	25	Headboards and footboards for the upper and lower bunks : 	2pcs
22	Upper bed slats : 	10pcs	26	Headboards and footboards for the lower middle tier : 	2pcs
23	Headboard and footboard panels for the lower and upper bunks: 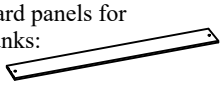	4pcs	27	Headboards and footboards for the lower and lower bunks : 	2pcs

HARDWARE LIST
(1580P544351F-1 / 1580P544362F-1)
(1580P548672Q-1 / 1580P548676Q-1)

A	Ø6.5x70 	3PCS	**H**	Ø10x40 	12PCS
B	Ø6.5x50 	28PCS	**I**	Ø8x30 	48PCS
C	Ø4x30 	50PCS	**J**	4x58 	1PC
D	Ø3.5x15 	10PCS	**K**	85x40 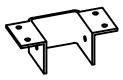	2PCS
E	1/4x100 	24PCS	**L**	1/4x30 	3PCS
F	1/4x70 	28PCS		Phillip head screw Not include 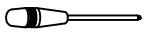	
G	1/4x35 	2PCS			

Step1

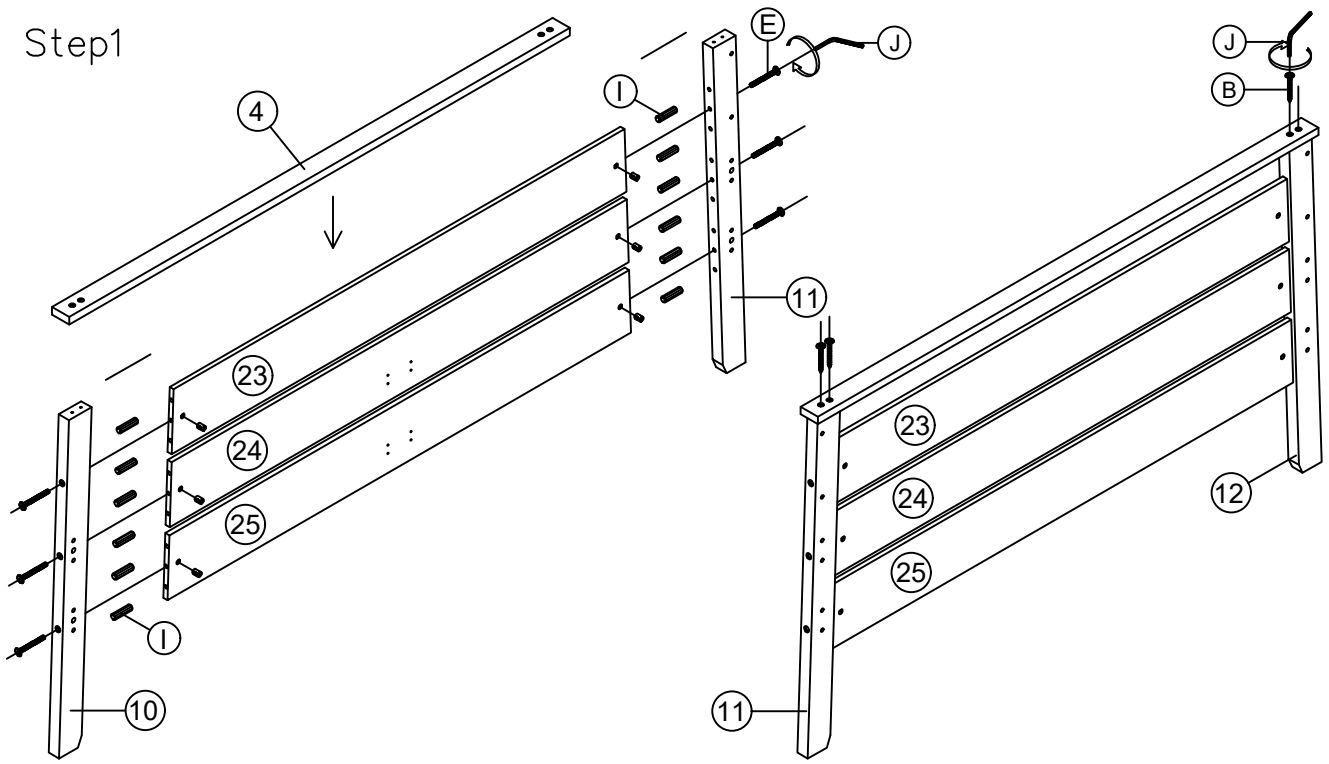

B	Ø6.5x50	8PCS	I	Ø8x30	24PCS
E	1/4x100	12PCS	J	4x58	1PC

Step2

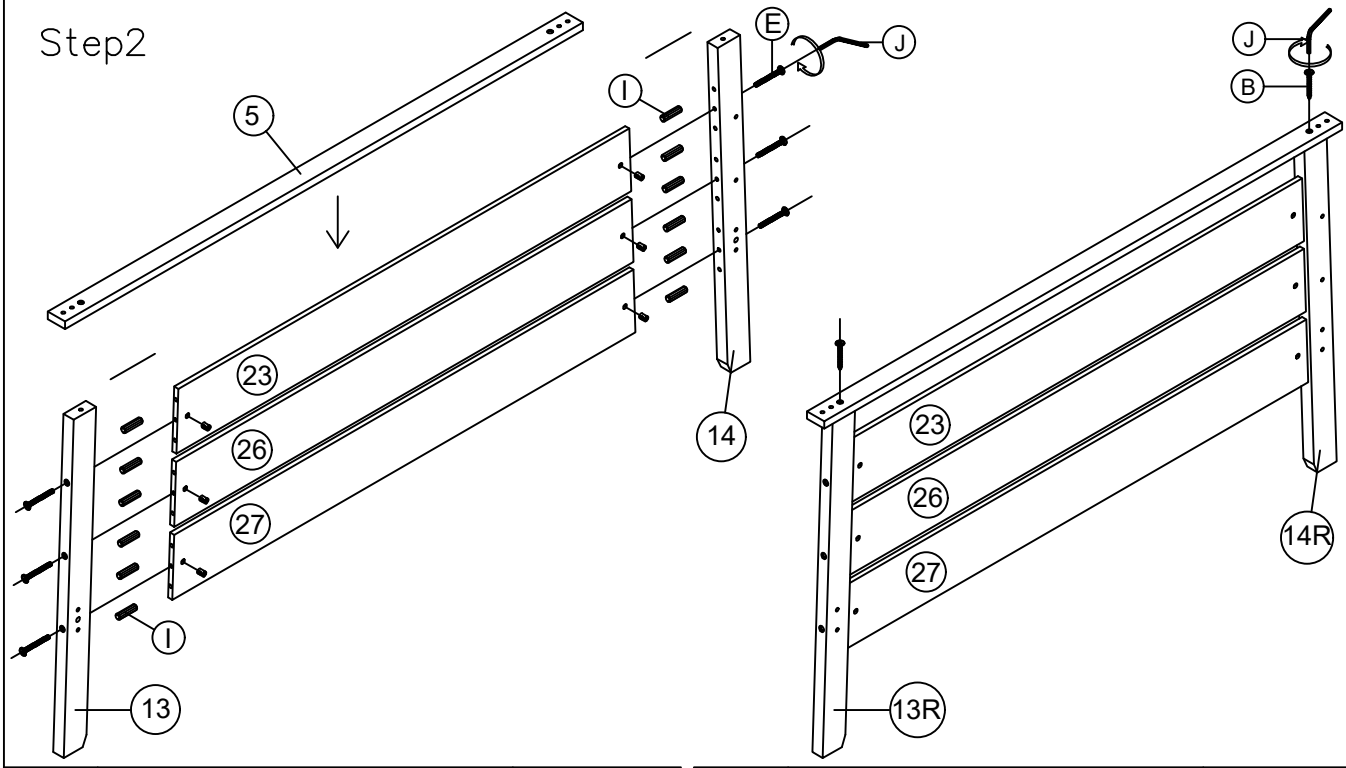

B	Ø6.5x50	4PCS	I	Ø8x30	24PCS
E	1/4x100	12PCS	J	4x58	1PC

Step3

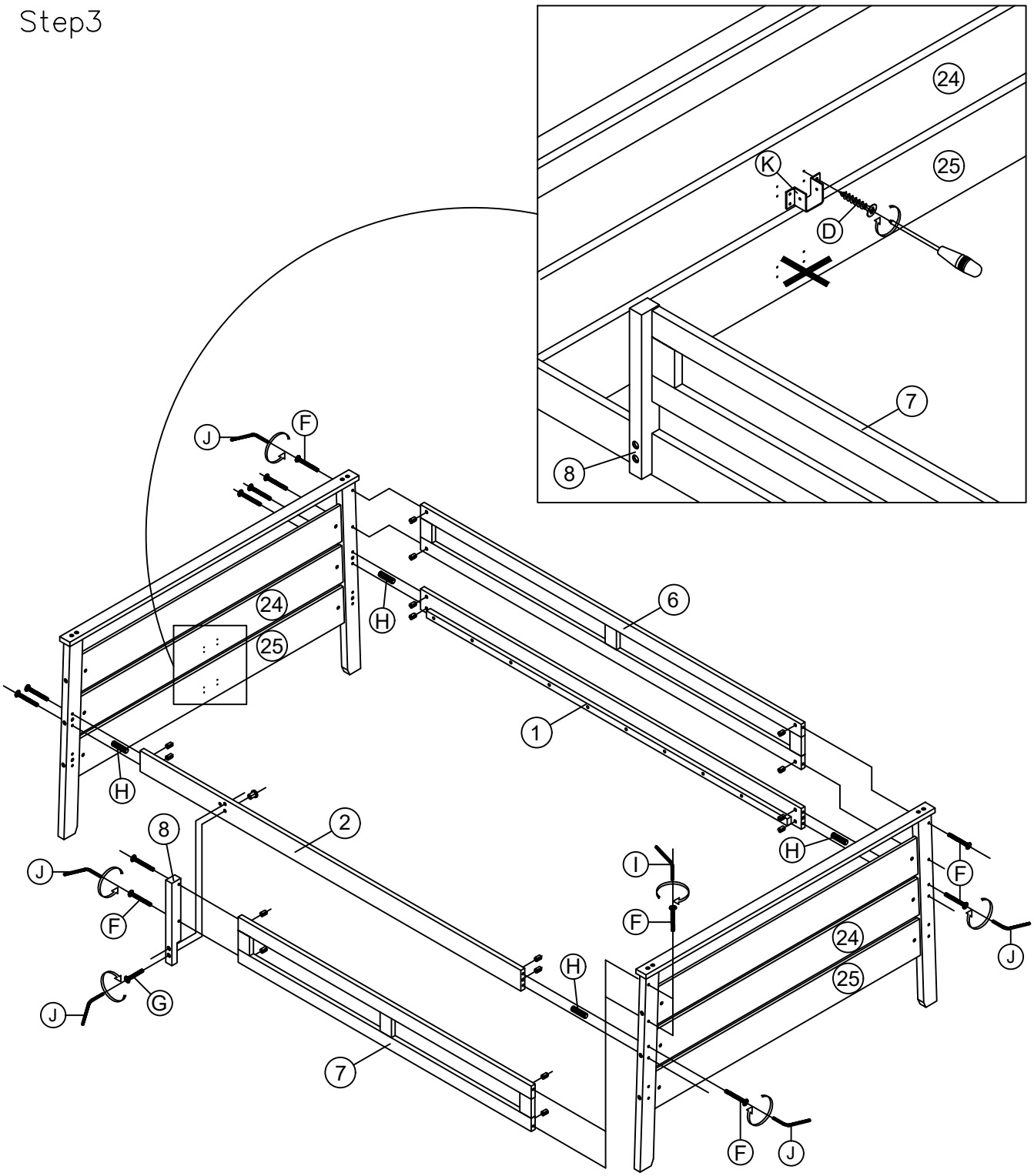

D	Ø3.5x15	8PCS	H	Ø10x40	4PCS
F	1/4x70	16PCS	J	4x58	1PC
G	1/4x35	2PCS	K	85x40	2PCS

Step4

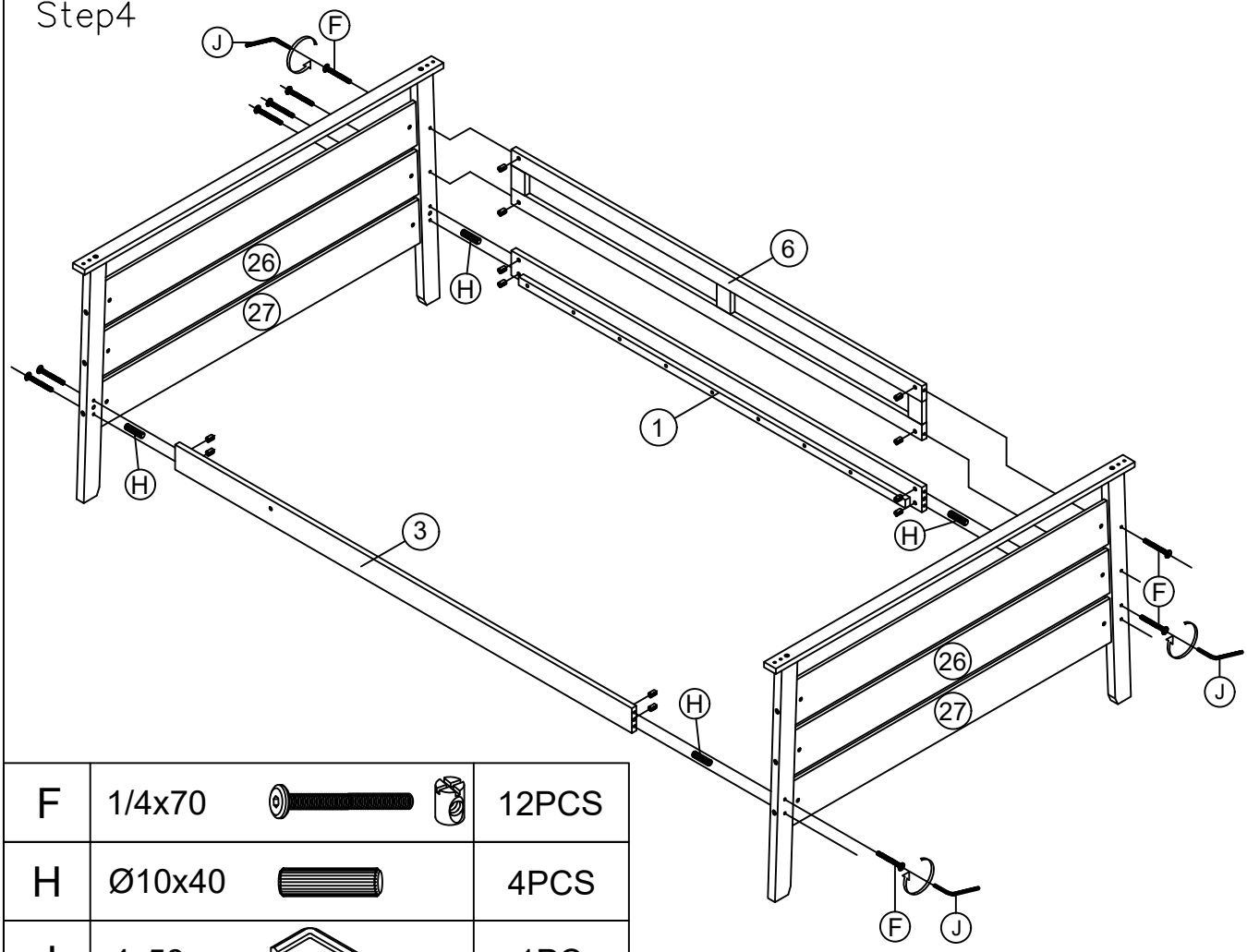

F	1/4x70	12PCS
H	Ø10x40	4PCS
J	4x58	1PC

Step5

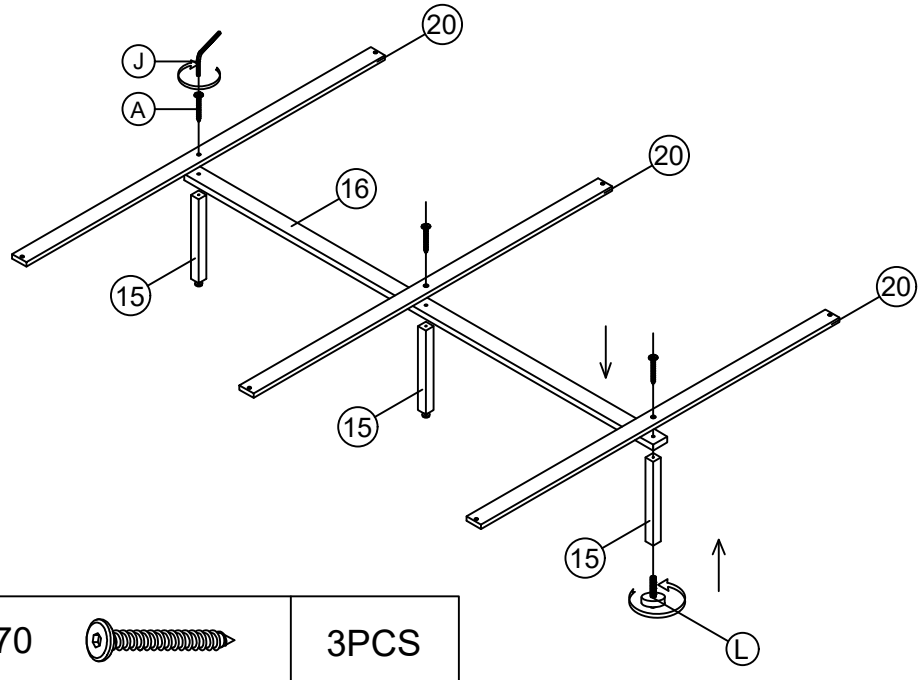

A	Ø6.5x70	3PCS
L	1/4x30	3PCS

J	4x58	1PC

Step6

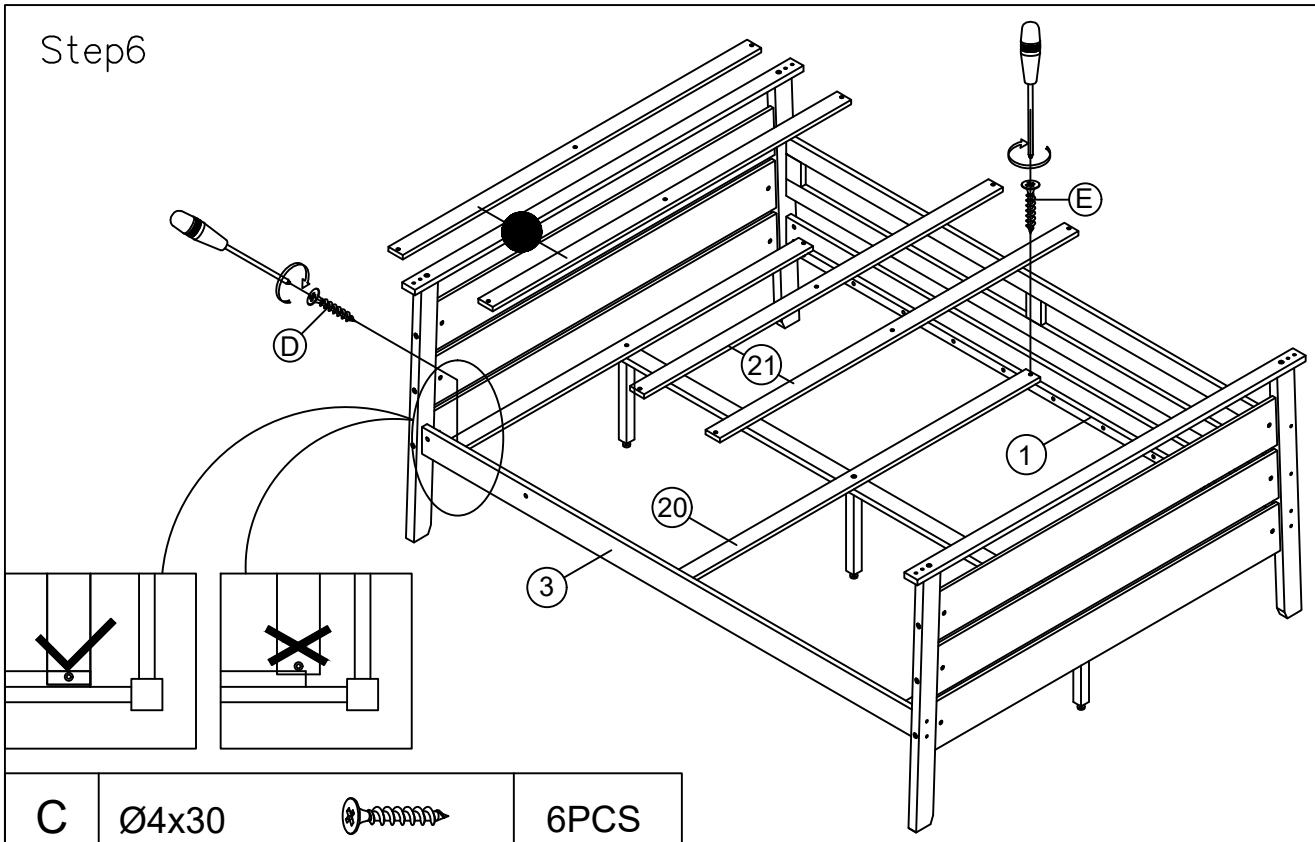

C	Ø4x30		6PCS

Step7

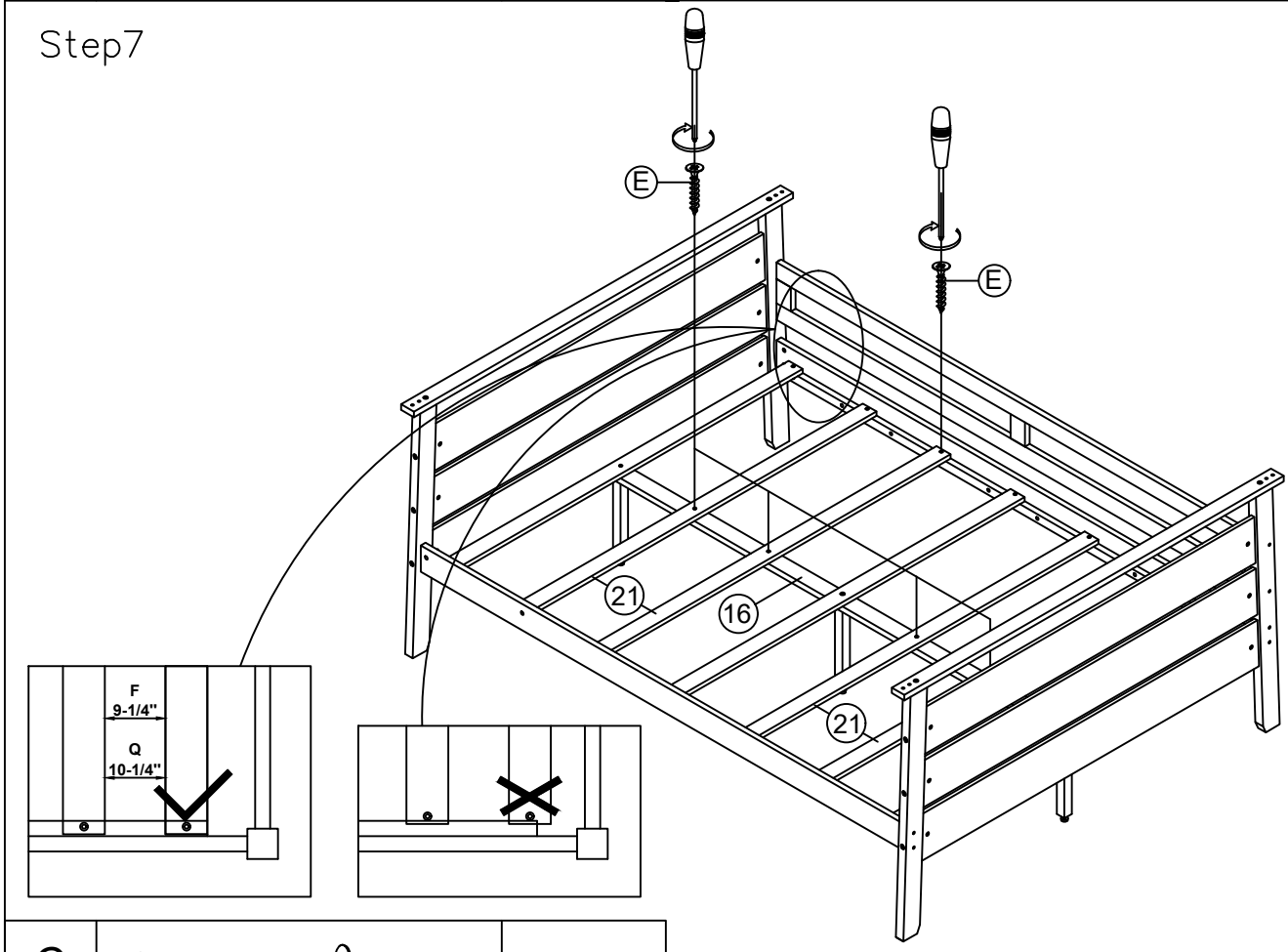

C	Ø4x30		12PCS

Step8

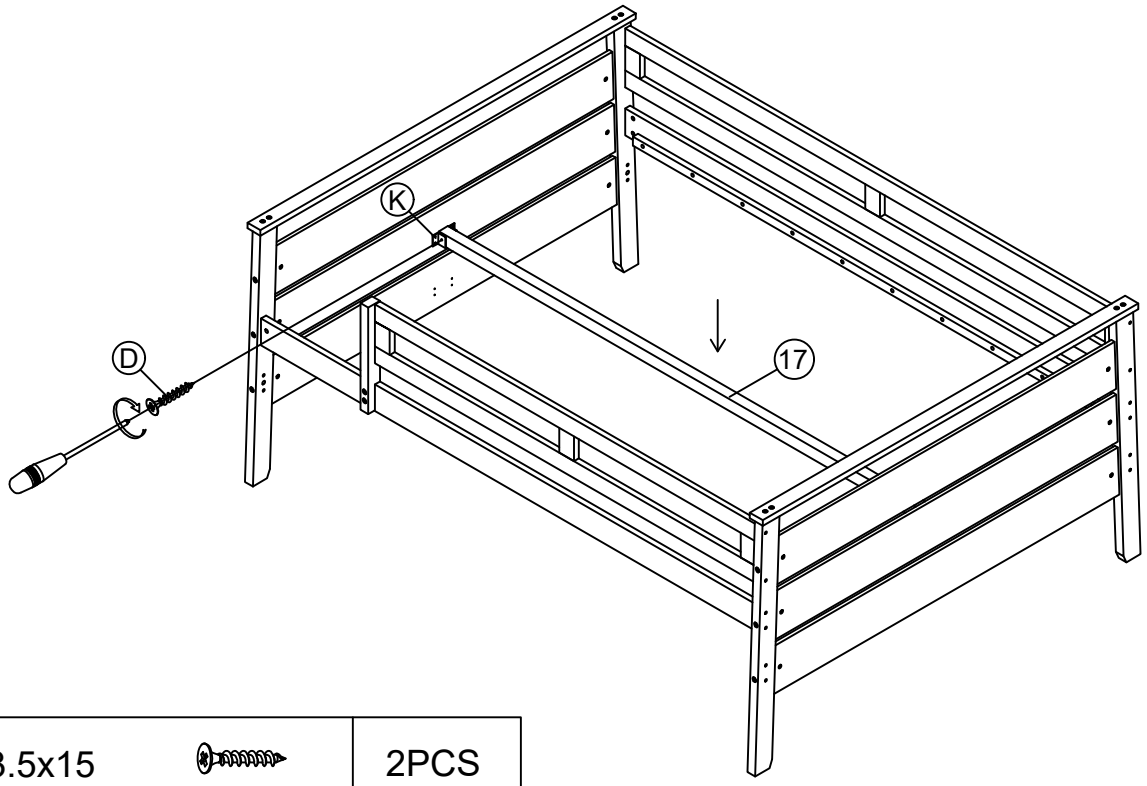

D	Ø3.5x15		2PCS

Step9

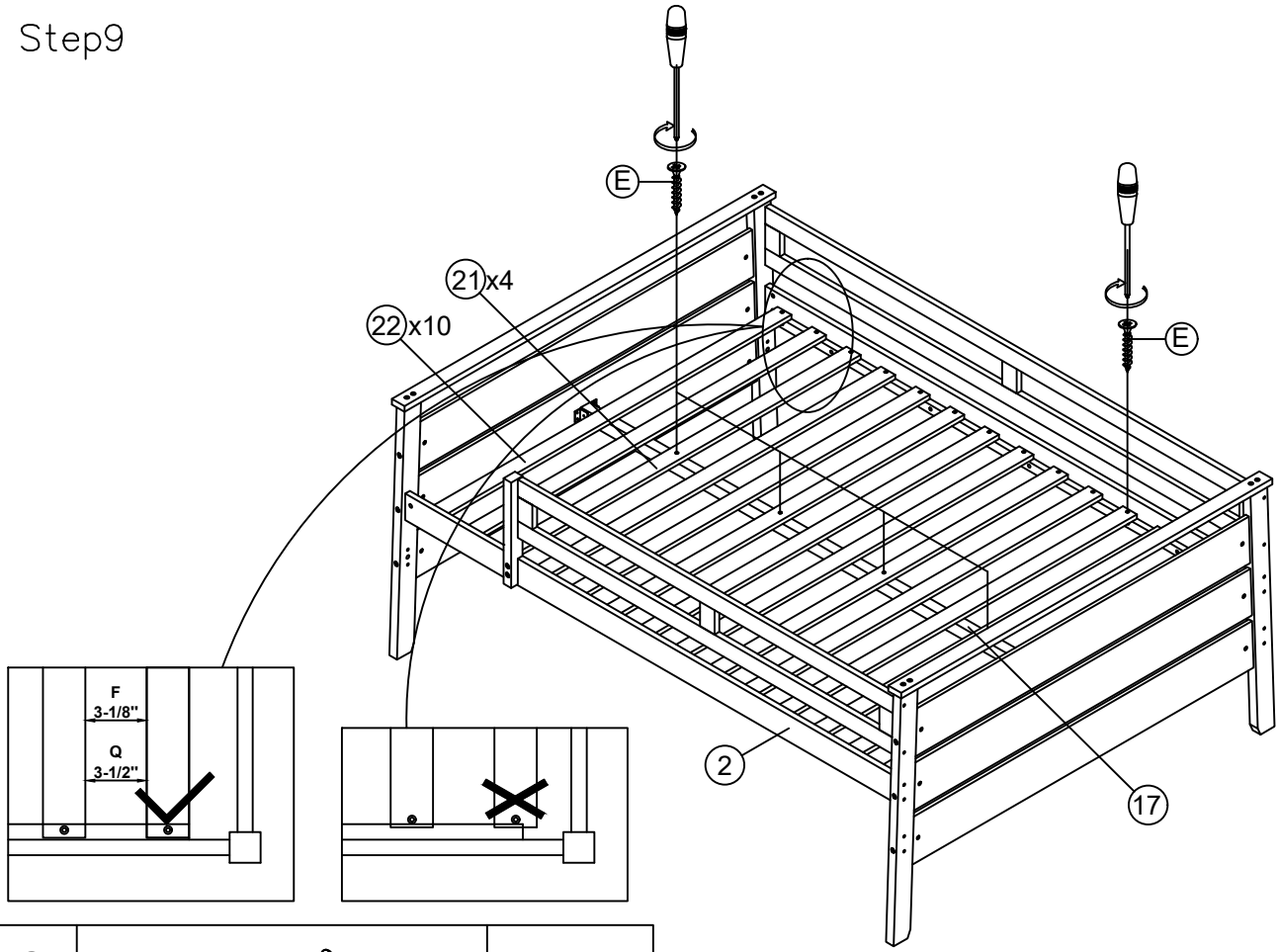

C	Ø4x30		32PCS

Step10

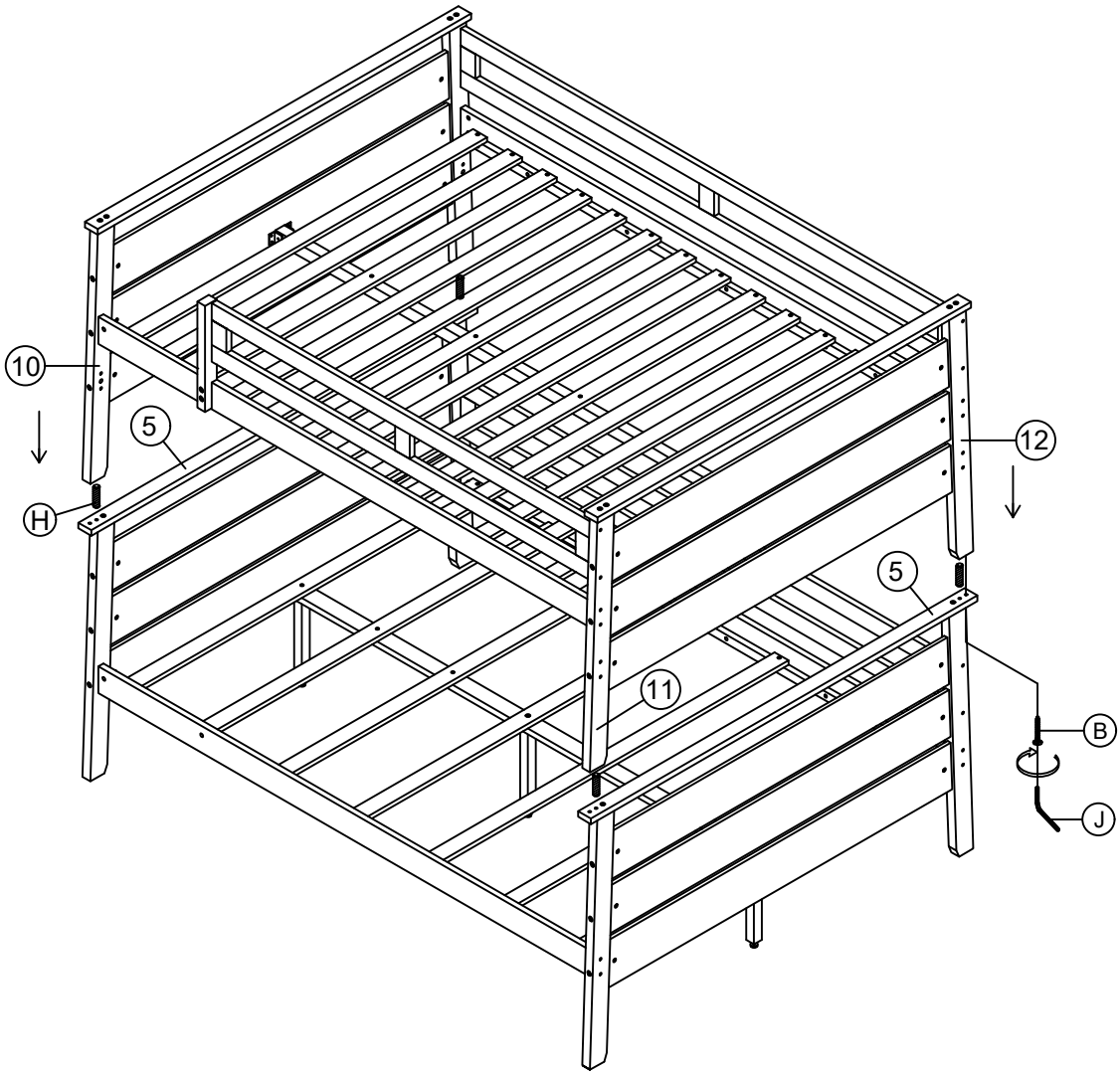

B	Ø6.5x50	4PCS				
H	Ø10x40	4PCS	J	4x58		1PC

Step11

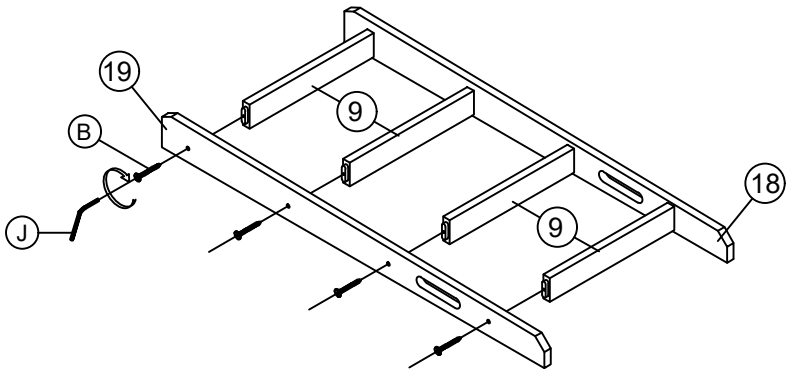

B	Ø6.5x50		8PCS	J	4x58		1PC

Step12

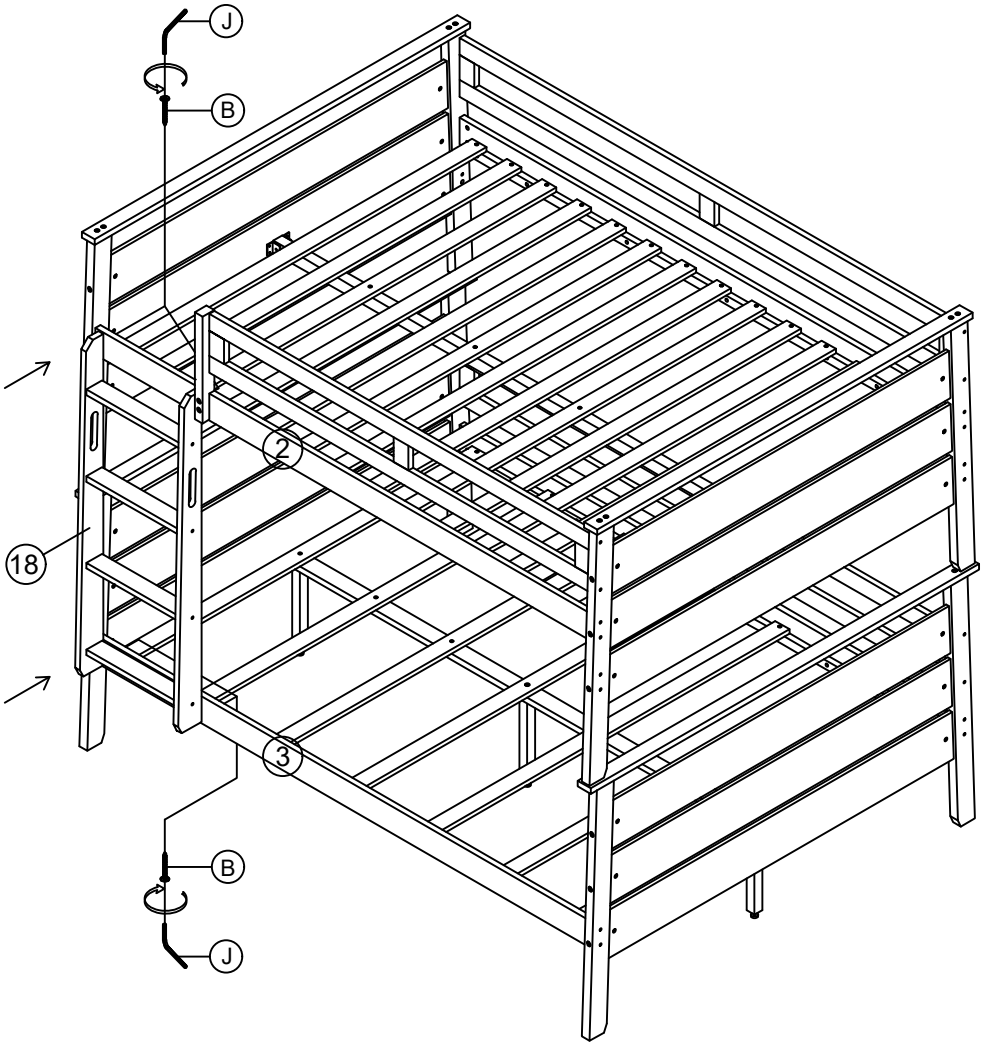

B	Ø6.5x50		4PCS	J	4x58		1PC

Step 13

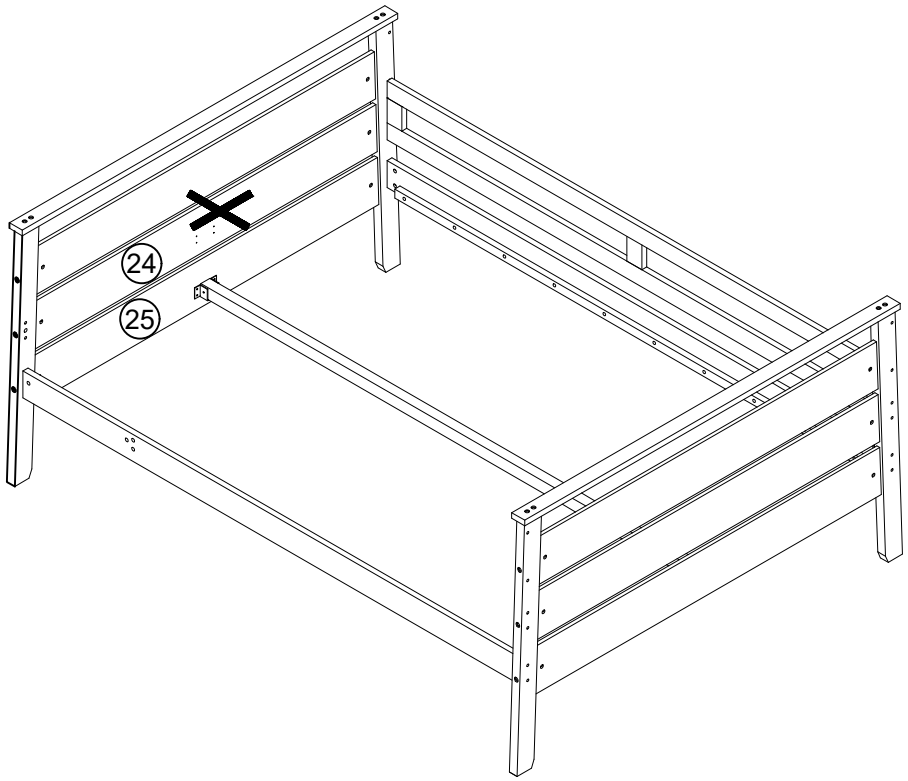

Step 14

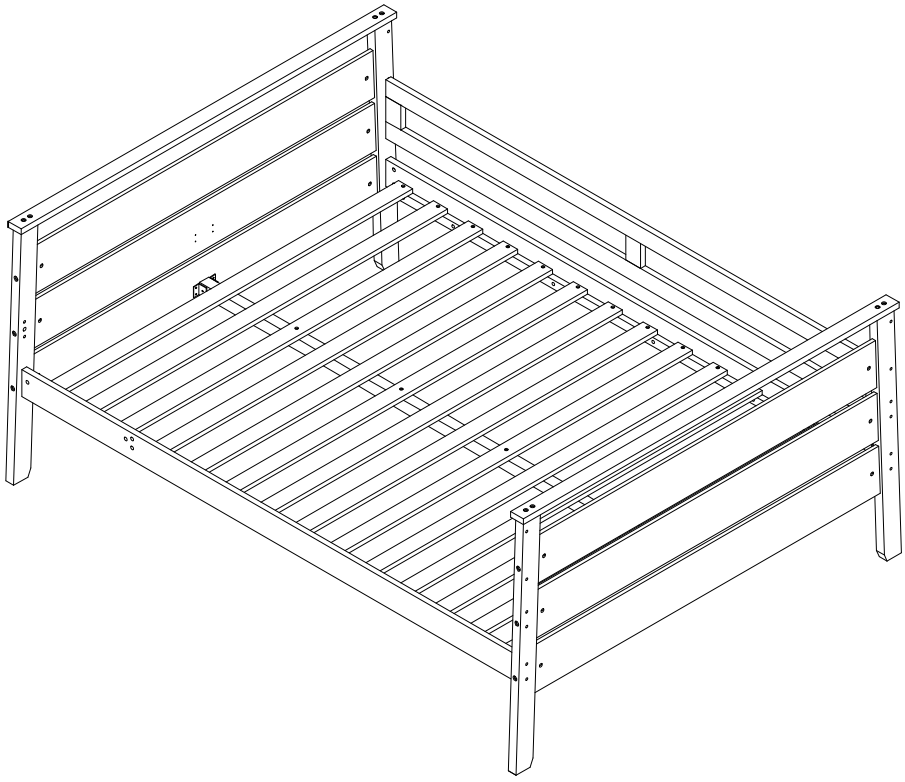



XXX

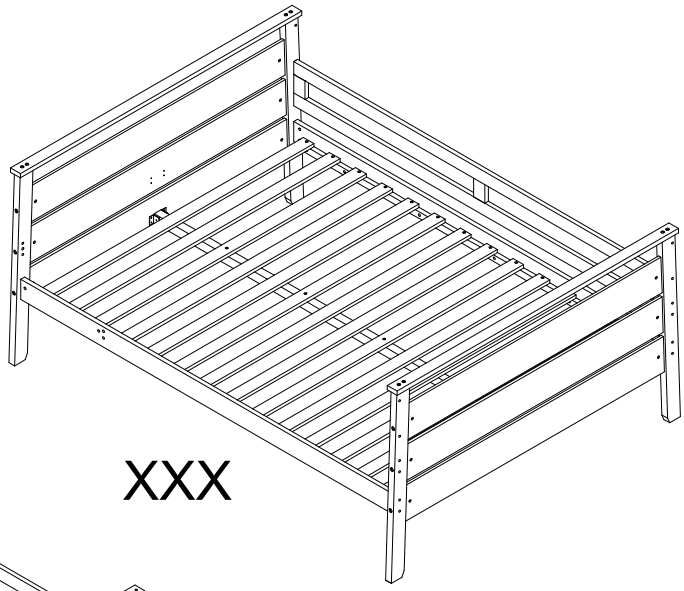

XXX

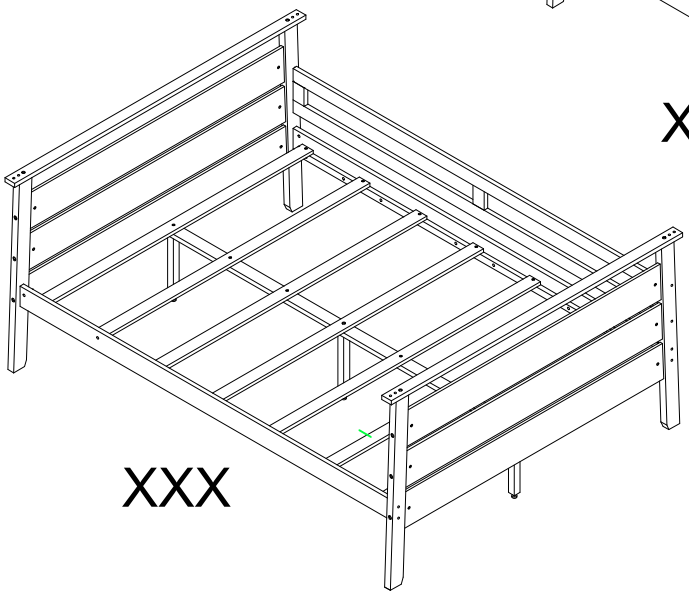

XXX