ASSEMBLY INSTRUCTIONS

QUEEN MURPHY BED

TYPE 1

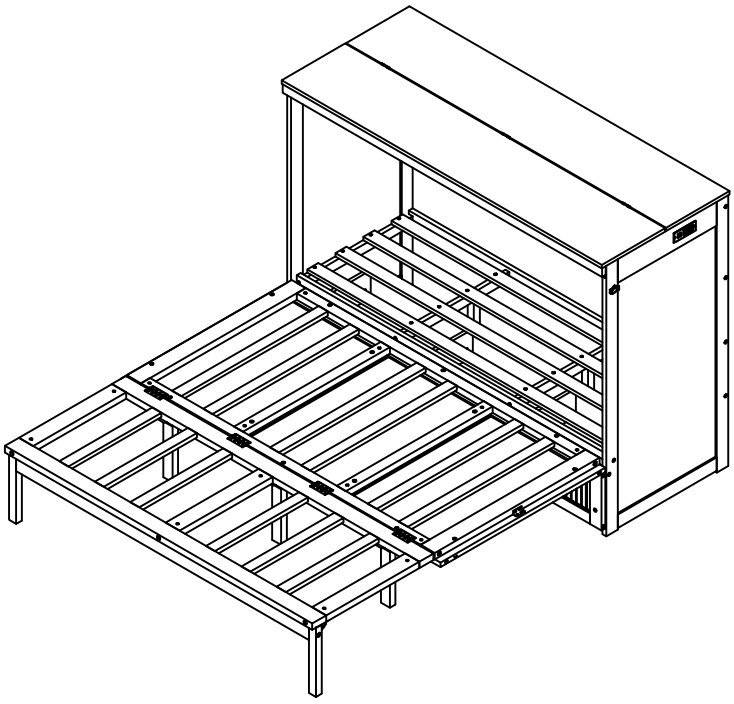

TYPE 2

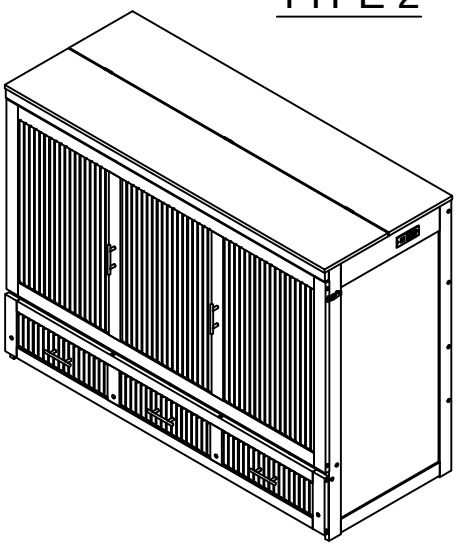

US-BED221AQ32/US-BED221AQ77

Contact us: vipservice2024@yeah.net

Detail View

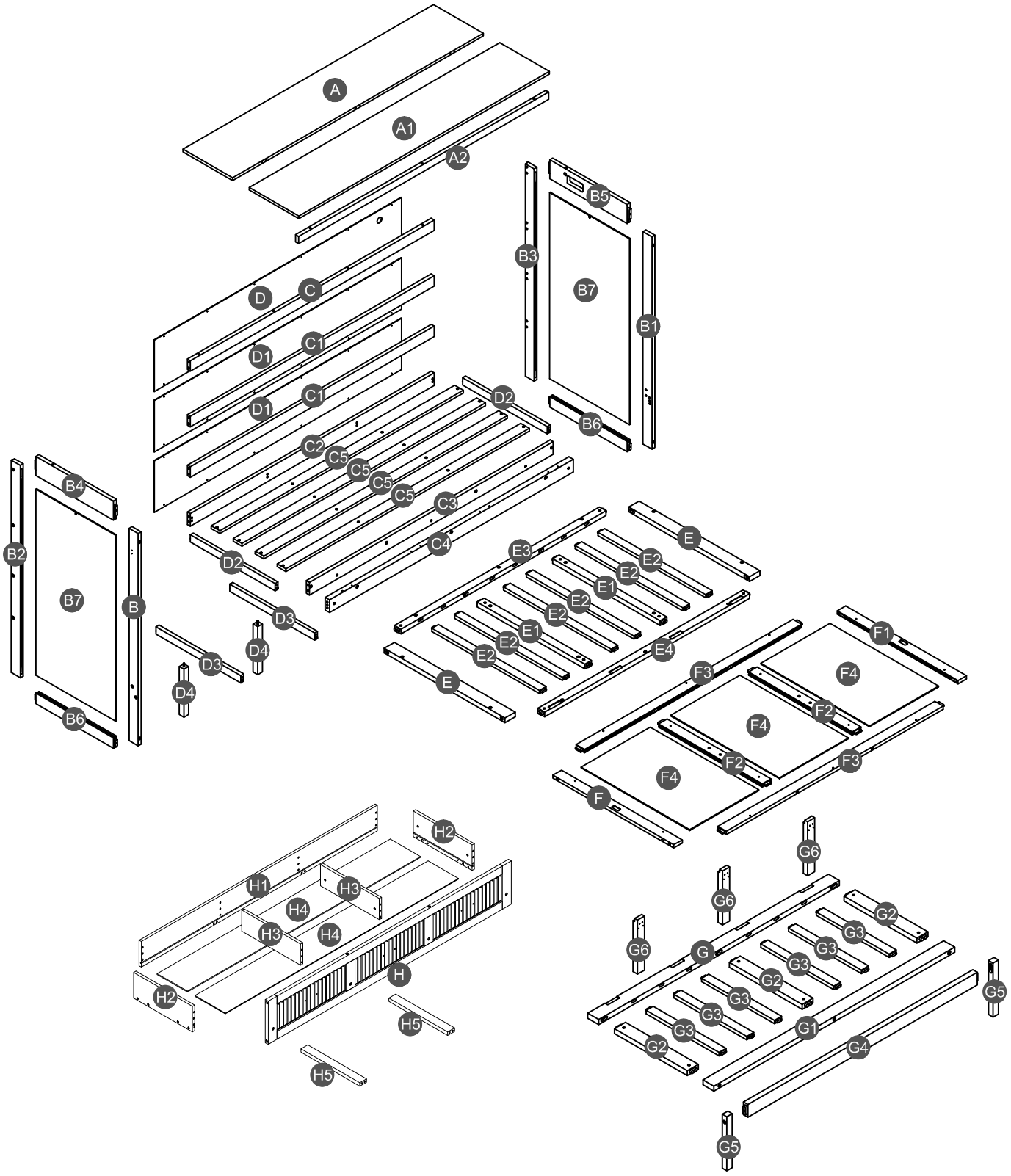
A
A1
A2
B5
B3
B7
B1
B6
D
C
D1
C1
D1
C1
D2
C2
C5
C5
C5
C5
C3
C4
B4
B2
B7
B
D2
D3
D4
D3
D4
B6
E3
E
E2
E2
E1
E2
E2
E1
E2
E2
E4
E
F1
F3
F4
F2
F4
F2
F3
F4
F
H2
H1
H3
H4
H3
H4
H
H2
H5
H5
G6
G6
G6
G2
G3
G3
G
G3
G2
G3
G3
G3
G2
G1
G5
G4
G5

Part list (US-BED221AQ32-A/US-BED221AQ77-A)

A Top panel HB (back) -1pc	**A1** Top panel HB (front) -1pc	**A2** 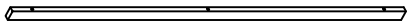 Lower bar of front panel HB -1pc
C 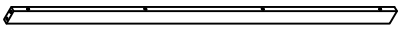 Upper horizontal bar HB(back)-1pc	**C1** 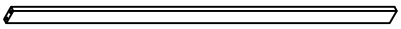 Center horizontal bar HB(back)-2pcs	**C2** 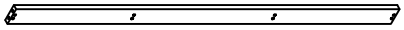 Lower horizontal bar HB(back)-1pc
C3 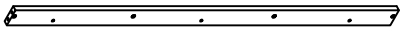 Horizontal bar HB (front) - 1pc	**C4** 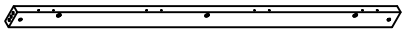 Lower horizontal bar HB(front)-1pc	**C5** 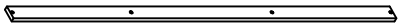 Slats - 4pcs
D 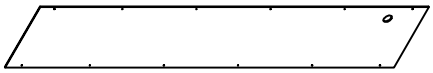 Back panel HB - 1pc	**D1** 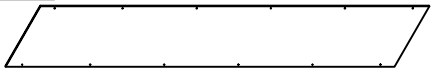 Back panel HB - 2pcs	**E3** Horizontal bar (back) - 1pc
E4 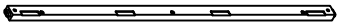 Horizontal bar (front) - 1pc	**F3** Horizontal bar (front/back) - 2pcs	**G** 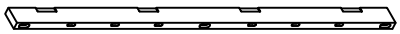 Horizontal bar (back) - 1pc
G1 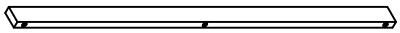 Horizontal bar (front) - 1pc	**G4** 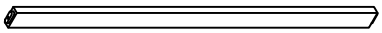 Horizontal bar FB - 1pc	**H** 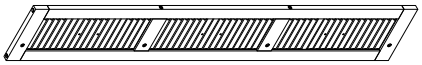 Front drawer panel - 1pc
H1 Back drawer panel - 1pc	**H4** 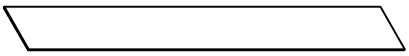 Drawer bottom - 2pcs	

Part list & Hardware list
(US-BED221AQ32-B/US-BED221AQ77-B)

B 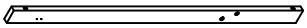 Vertical bar HB (left front) -1pc	**B1** Vertical bar HB (right front) -1pc	**B2** 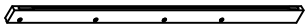 Vertical bar HB (left back) -1pc
B3 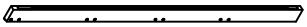 Vertical bar HB (right back) -1pc	**B4** 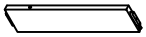 Upper horizontal bar HB (left)- 1pc	**B5** 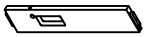 Upper horizontal bar HB(right)-1pc
B6 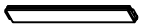 Lower horizontal bar HB - 2pcs	**B7** Side panel HB - 2pcs	**D2** Support bar HB - 2pcs
D3 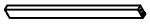 Lower support slat - 2pcs	**D4** Leg support - 2pcs	**E** 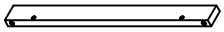 Sidebar frame (left/right)- 2pcs
E1 Center bar frame - 2pcs	**E2** 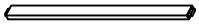 Center bar frame - 6pcs	**F** Sidebar frame (left) -1pc
F1 Sidebar frame (right) -1pc	**F2** Center bar frame -1pc	**F4** 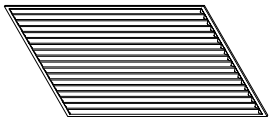 Frame panel - 3pcs
G2 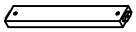 Sidebar frame - 3pcs	**G3** 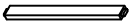 Center bar frame - 6pcs	**G5** Leg FB - 2pcs
G6 Leg support - 3pcs	**H2** 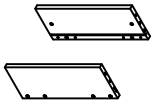 Left / right drawer panel - 2pcs	**H3** Divider drawer panel - 2pcs
H5 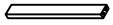 Support drawer - 2pcs		

Hardware List
(US-BED221AQ32-B/US-BED221AQ77-B)

1 Ø8*30mm Wood dowel (40pcs)	**2** Ø10*20mm Wood dowel (4pcs)	**3** (Ø15)1/4"*100mm Hex-Head bolts (10pcs)
4 (Ø15)1/4"*80mm Hex-Head bolts (6pcs)	**5** (Ø12)1/4"*60mm Hex-Head bolts (20pcs)	**6** (Ø12)1/4"*40mm Hex-Head bolts (3pcs)
7 (Ø12)1/4"*65mm Hex-Head bolts (16pcs)	**8** (Ø12)1/4"*40mm Hex-Head bolts (22pcs)	**9** 1/4"*15 (9.5mm) Horizontal-Hole bolts(36pcs)
10 Ø4*30mm Wood screws (24pcs)	**11** Ø3.5*19mm Wood screws (132pcs)	**12** Ø3.5*15mm Wood screws (38pcs)
13 Ø3.5*15mm Wood screws (40pcs)	**14** 5/32"*15mm Ph zinc(Knob) (10pcs)	**15** 125*33*10mm Handle (5pcs)
16 76*42*2mm Hinger (8pcs)	**17** 45*33*20mm Wheels (2pcs)	**18** 59*55*78mm Metal bracket (4pcs)
19 70*55*59mm Metal bracket (2pcs)	**20** 40*17*17*1.6mm Metal bracket (2pcs)	**21** 38*20*1.2mm Hinger (3pcs)
22 Ø7"*35mm Cam lock (10pcs)	**23** Ø14*9mm Cam lock (10pcs)	**24** Ø9*32mm Plastic anchor (2pcs)

25 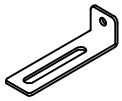 58*16*16*(1.5mm) Metal bracket (2pcs)	**26** Ø4*38mm Wood screws (2pcs)	**27** 60*28*15mm Metal bracket (2sets)
28 17*21*21*2mm Metal bracket (4pcs)	**29** 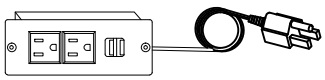 1500*43*47*125mm (1pc) Power outlet	**30** 100*52*20mm Wheels (4pcs)
31 (1/4")4.5*58mm Allen key (1pc)		

ASSEMBLY TOOLS REQUIRED (NOT INCLUDED)

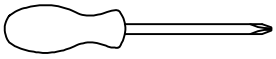 (Phillip head screwdriver)

PLEASE BE CAREFUL DO NOT DAMAGE THE HOLE POSITION WHEN YOU USE POWER TOOLS !

STEP 1:

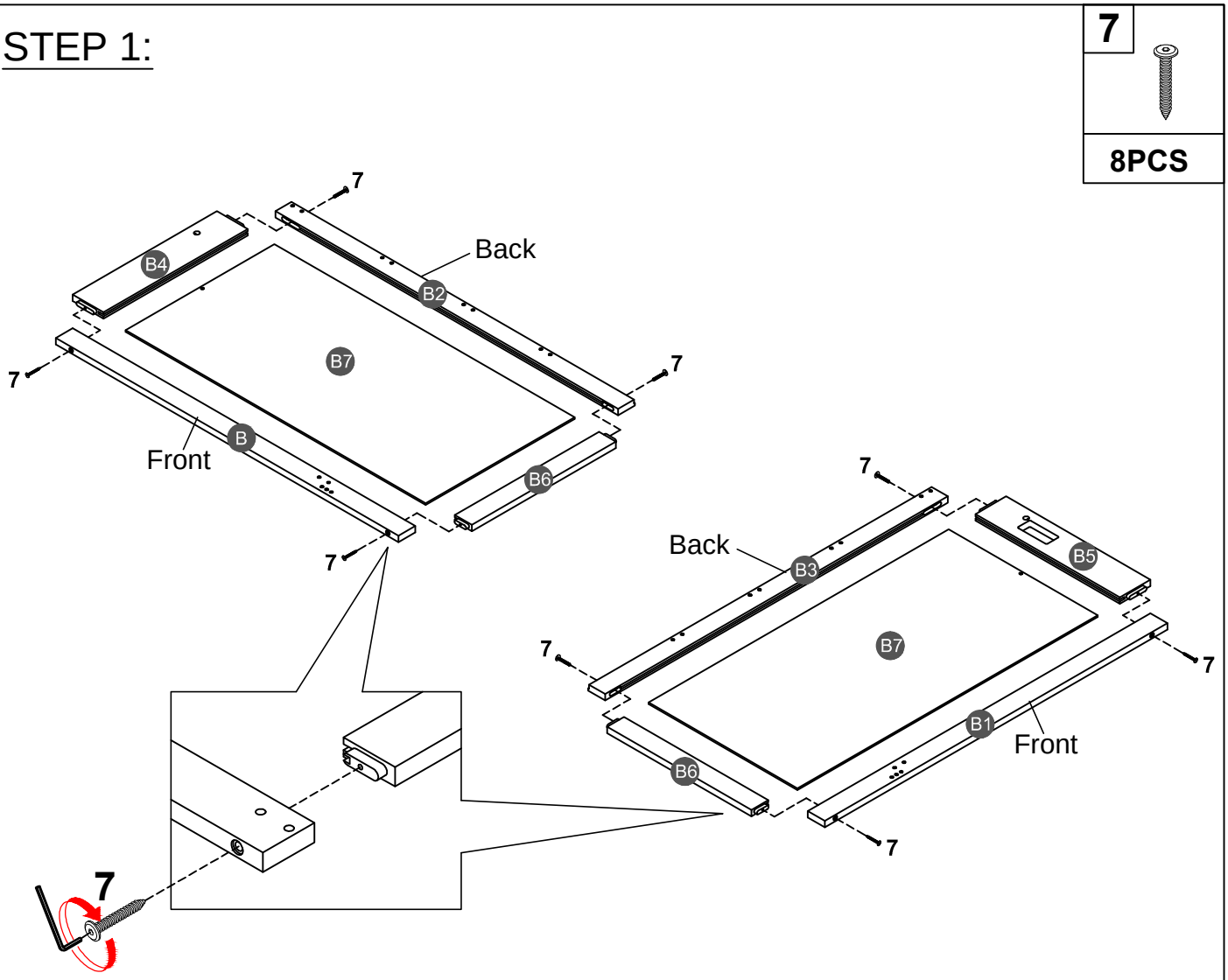
7
8PCS
7
Back
B4
B2
B7
7
7
B
Front
B6
7
7
Back
B3
B5
B7
7
7
B1
Front
B6
7
7

STEP 2:

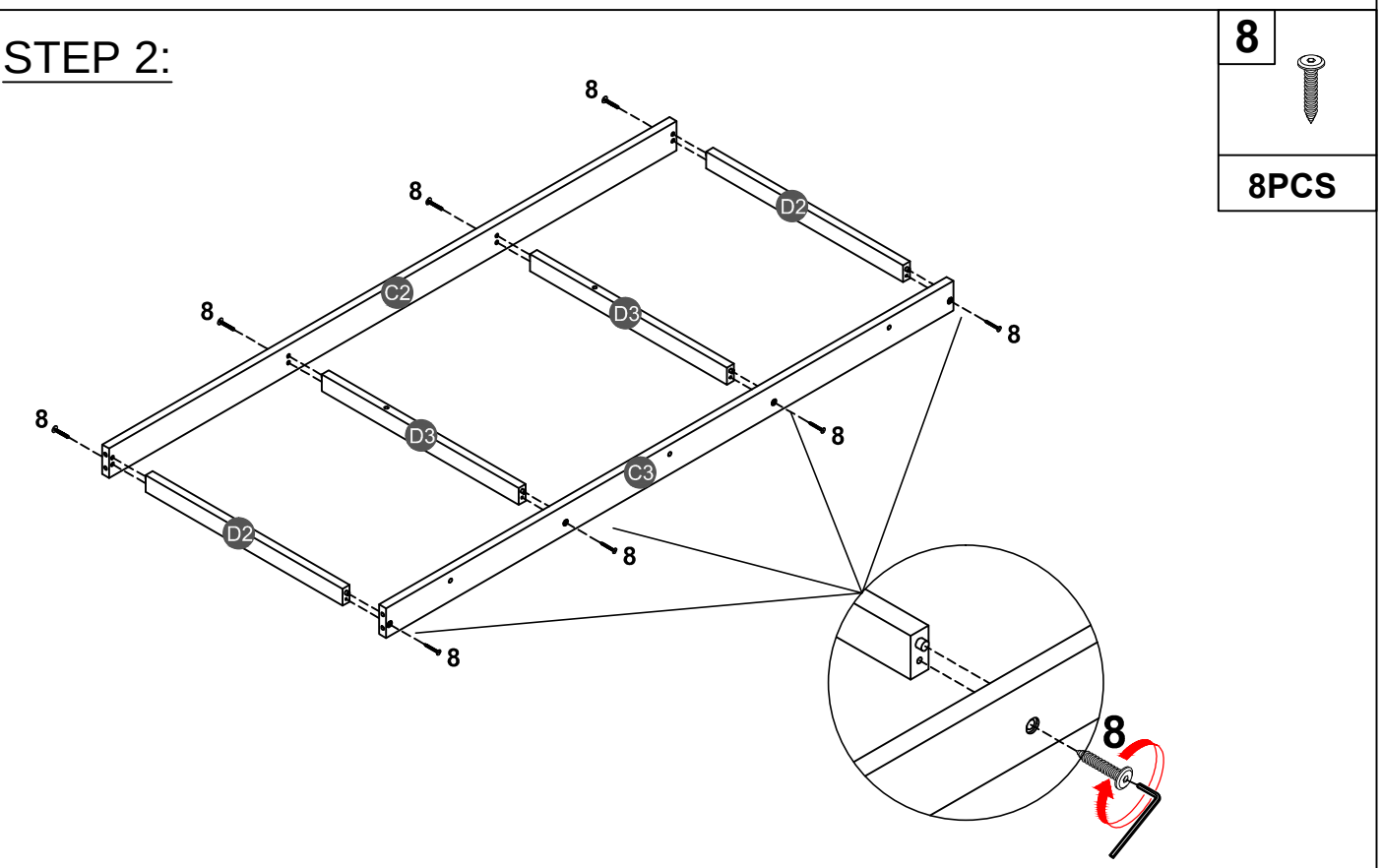
8
8PCS
8
D2
8
C2
D3
8
8
8
D3
8
C3
D2
8
8
8

STEP 3:

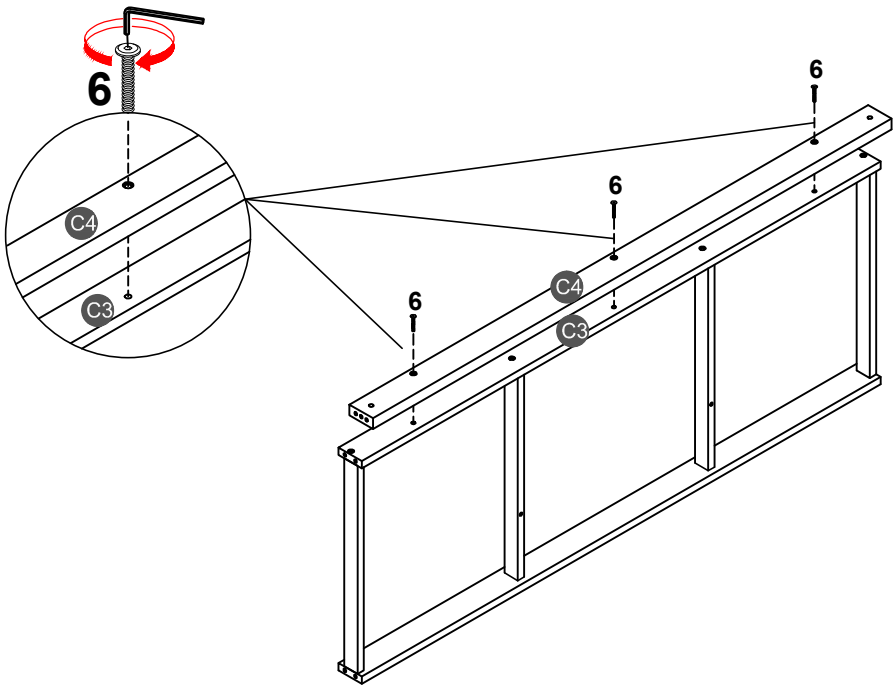

6	3PCS

STEP 4:

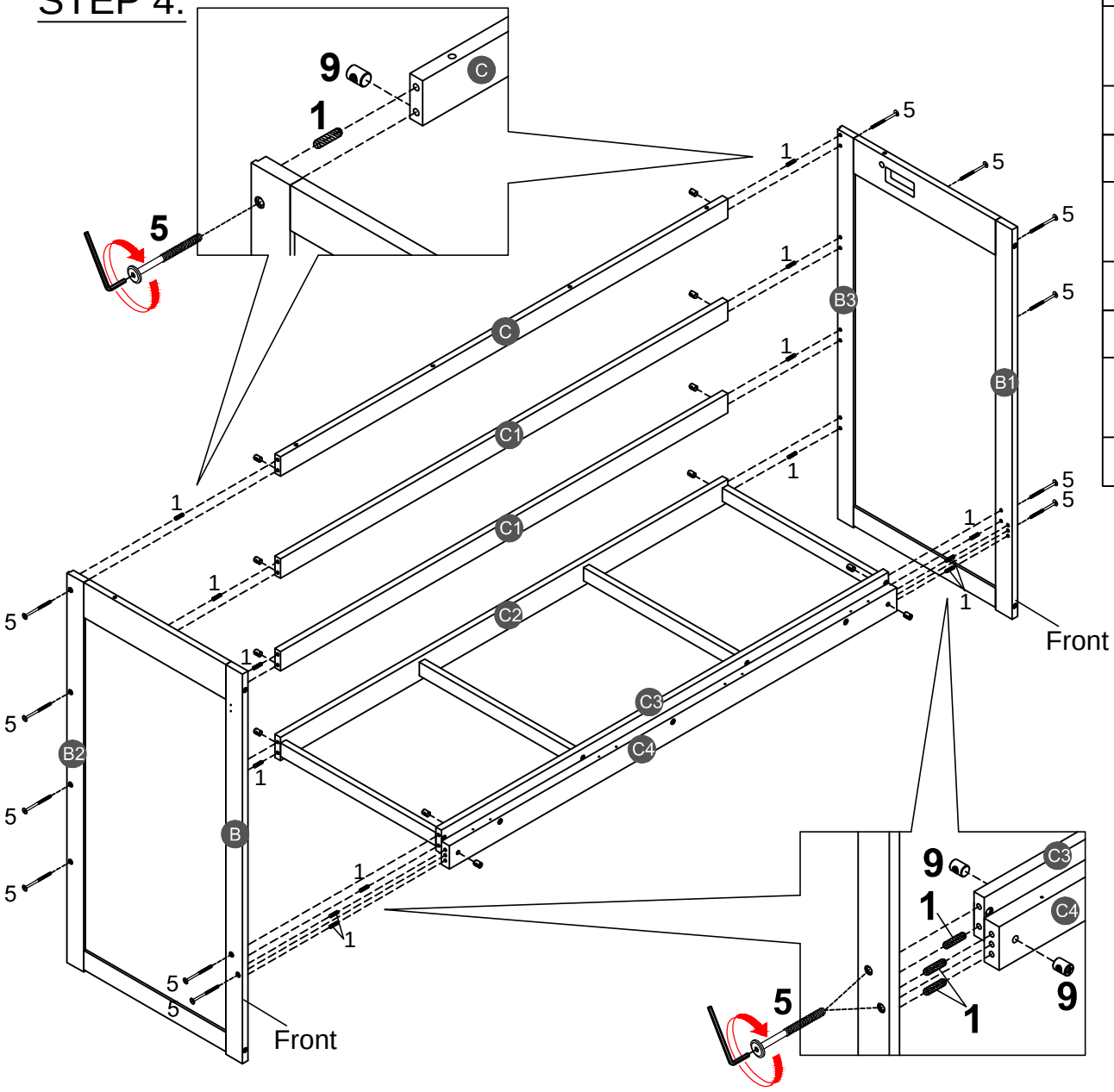

1	14PCS
5	12PCS
9	12PCS

STEP 5:

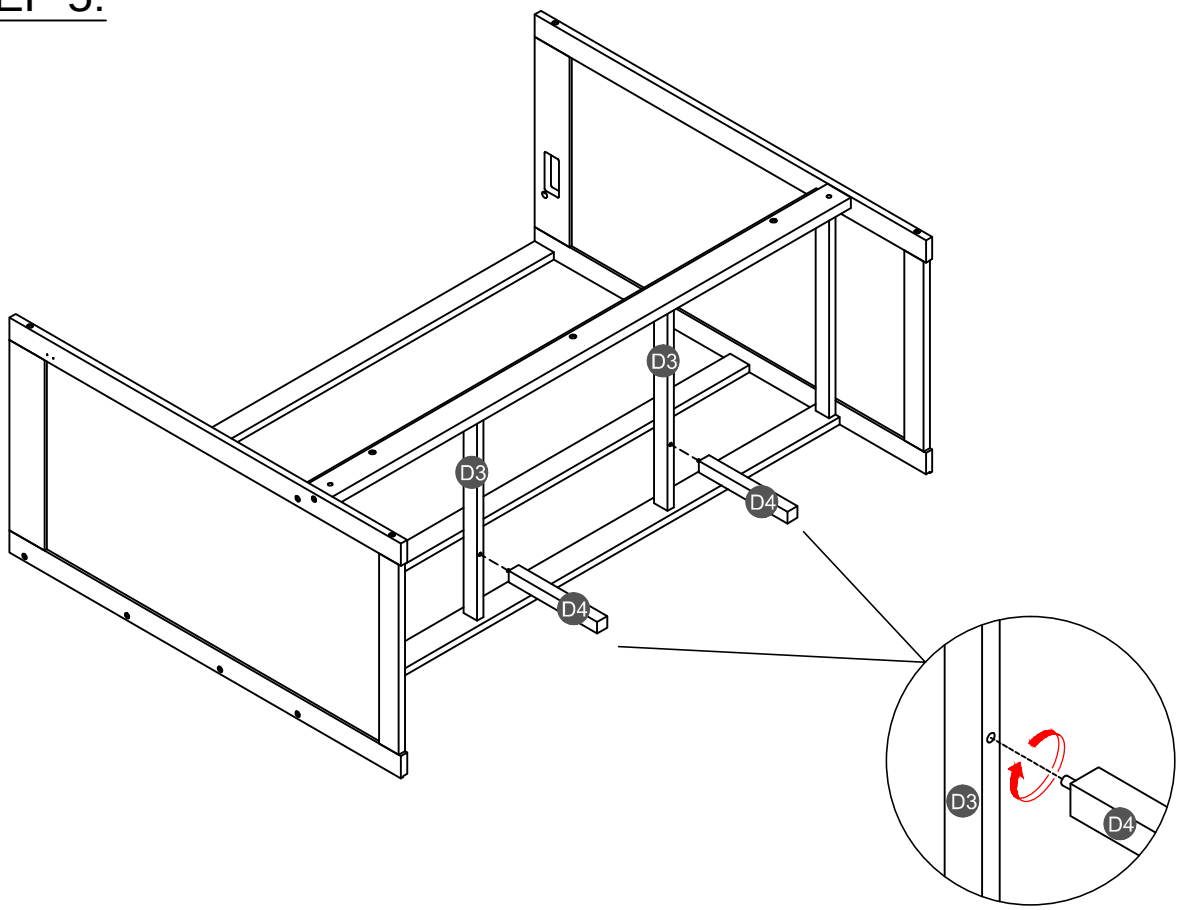

STEP 6:

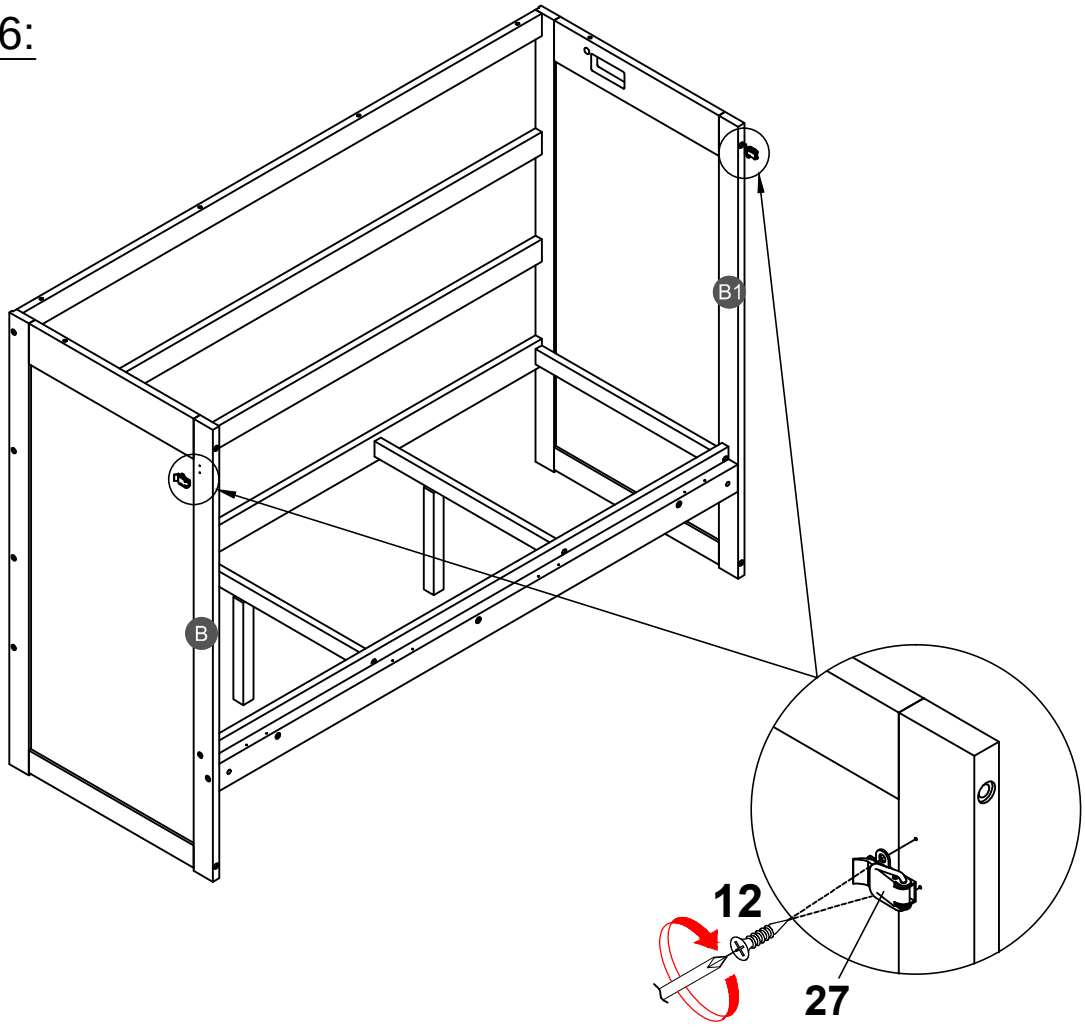

12	
4PCS	
27	
2PCS	

STEP 7:

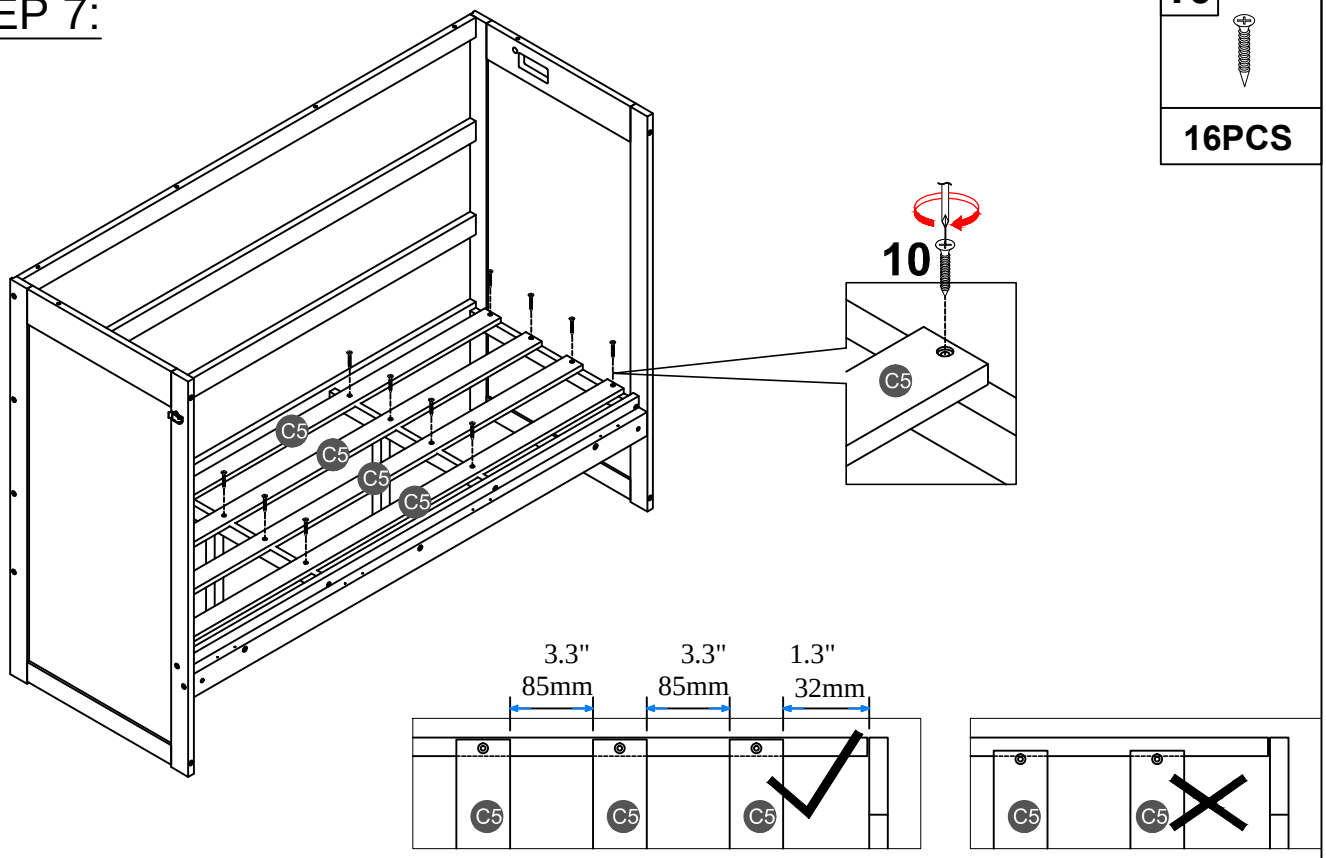

NOTE: Please make sure the bed slats close to the side rail before locking the screws to avoid breakage. This step is required for both the left and right sides. Moreover, please do not lock the screws of the bed slats at the outermost edge to avoid damaging.

STEP 8:

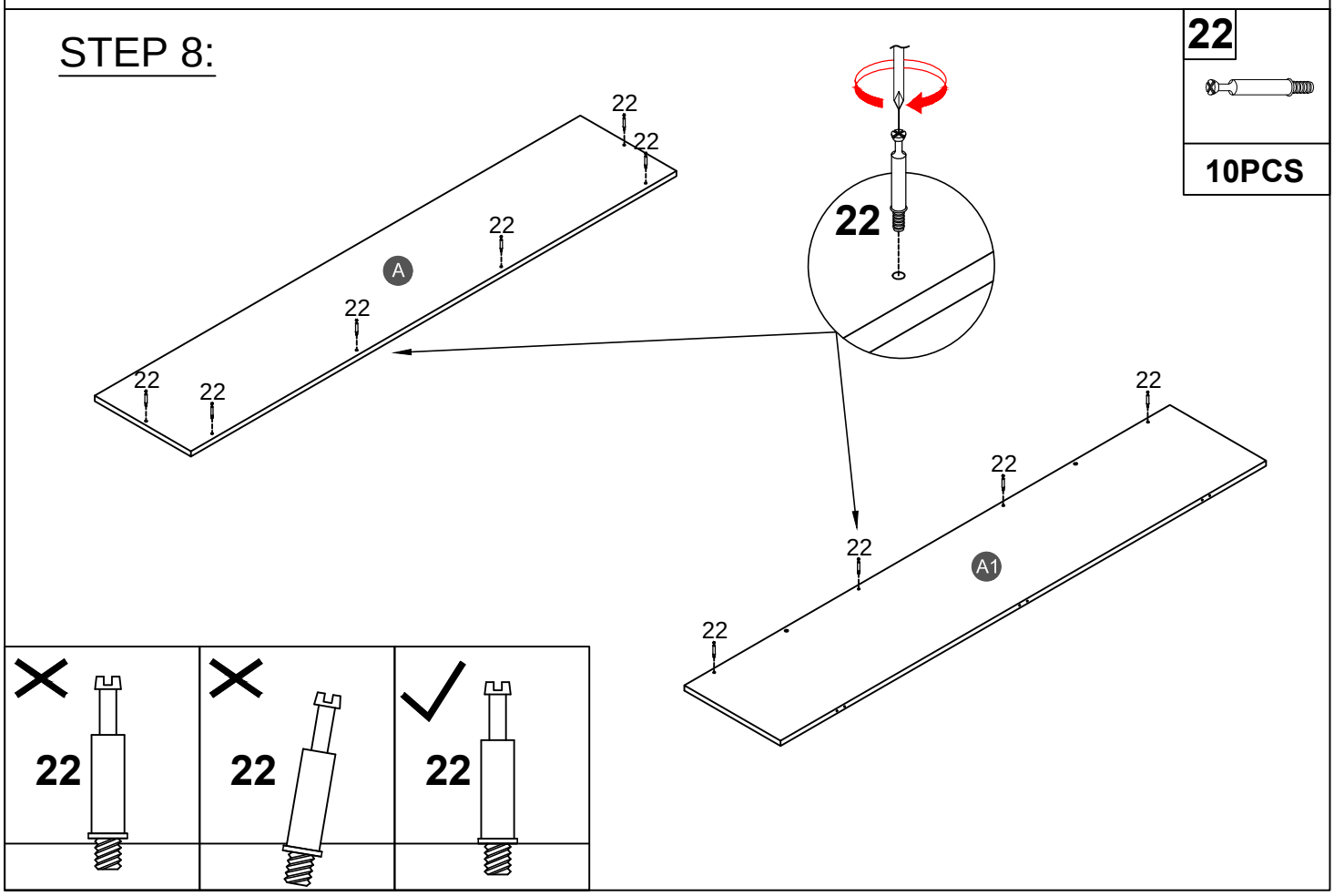

STEP 9:

1	23
2PCS	4PCS

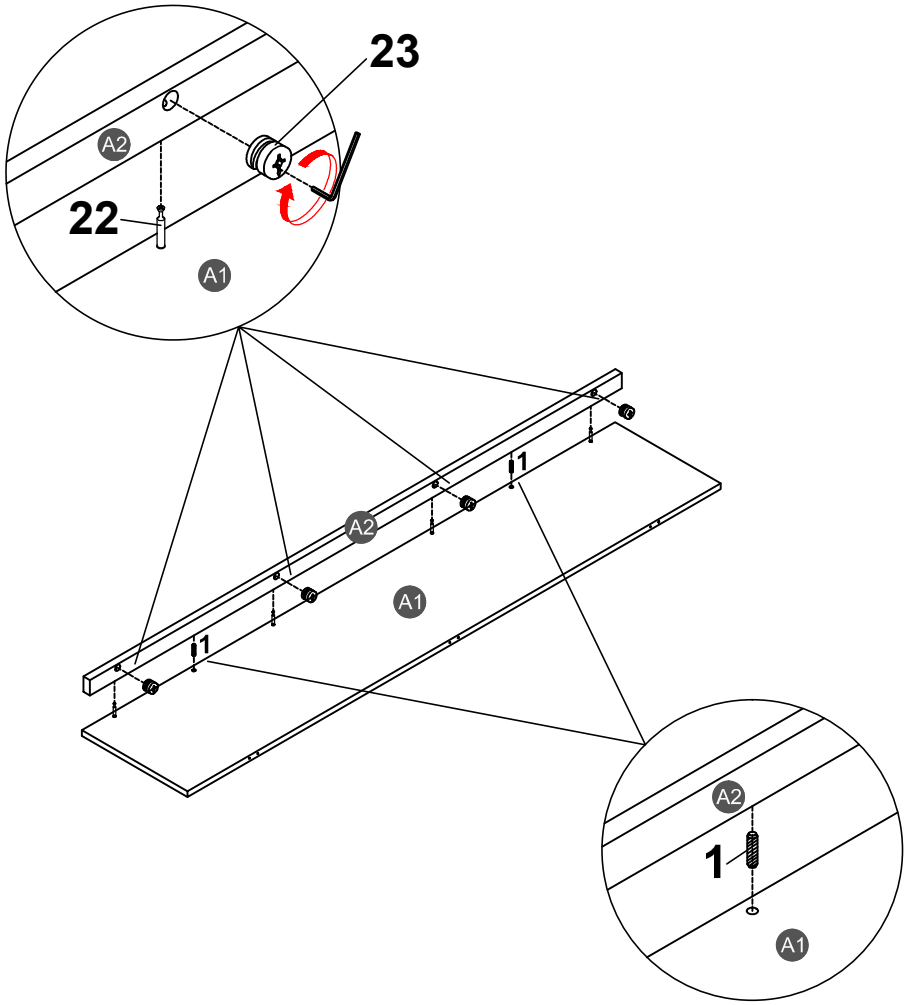

Note: Place hardware #23 with the "X" face outward,
and make sure that the arrowhead is upward. Then, place hardware #23 into the hole of hardware #22 and tighten it clockwise with a hand screwdriver.
(Please do NOT use an electric screwdriver.)

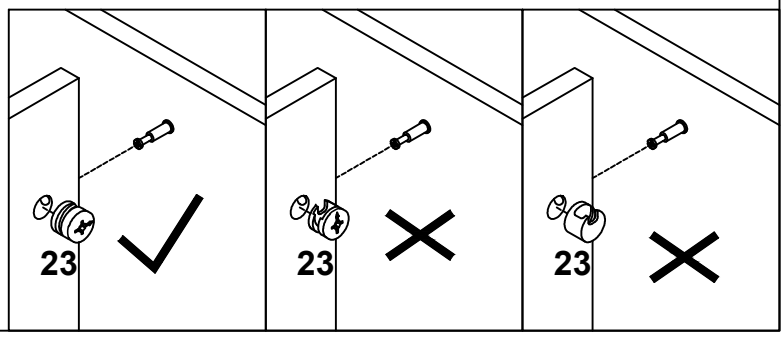

STEP 10:

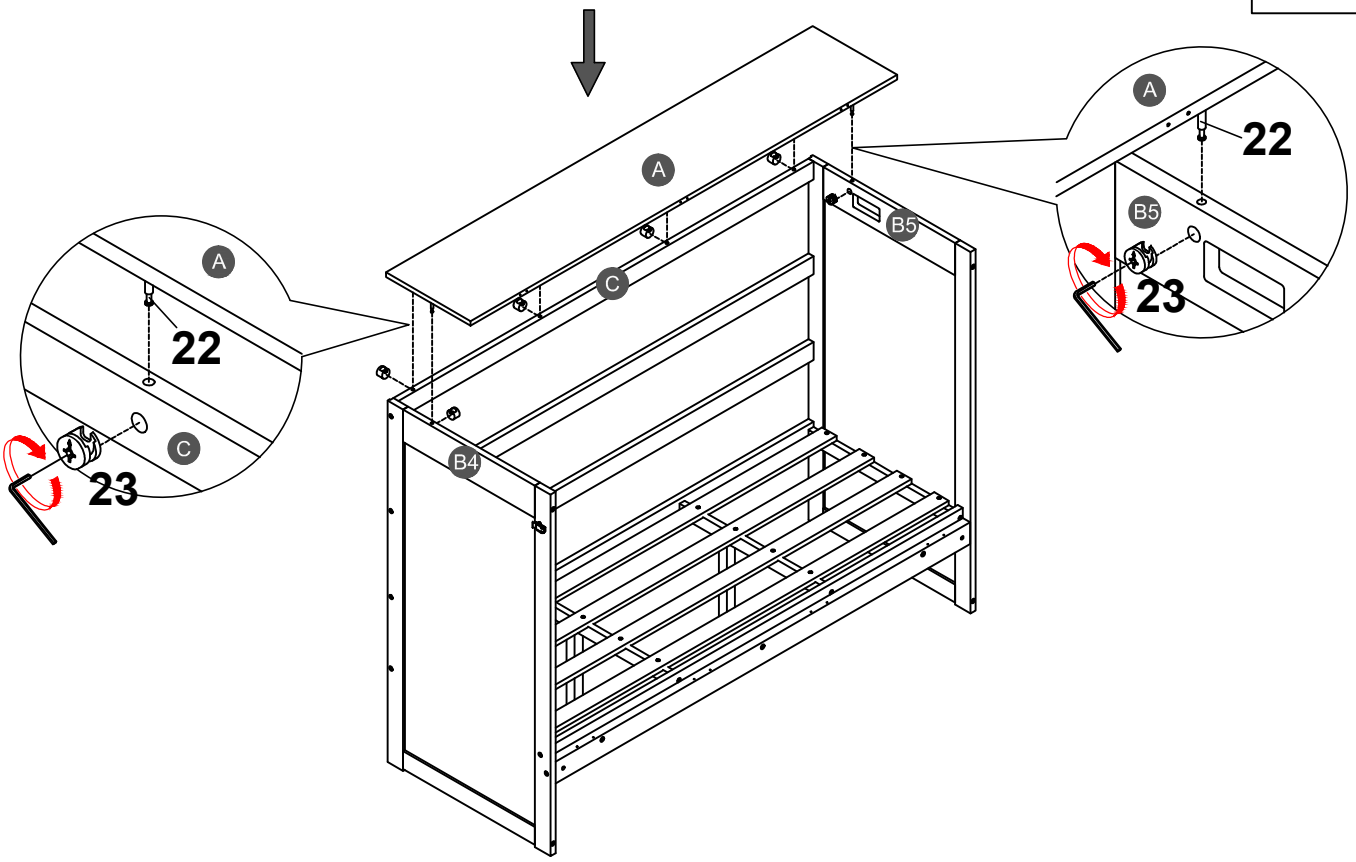

23

6PCS

STEP 11:

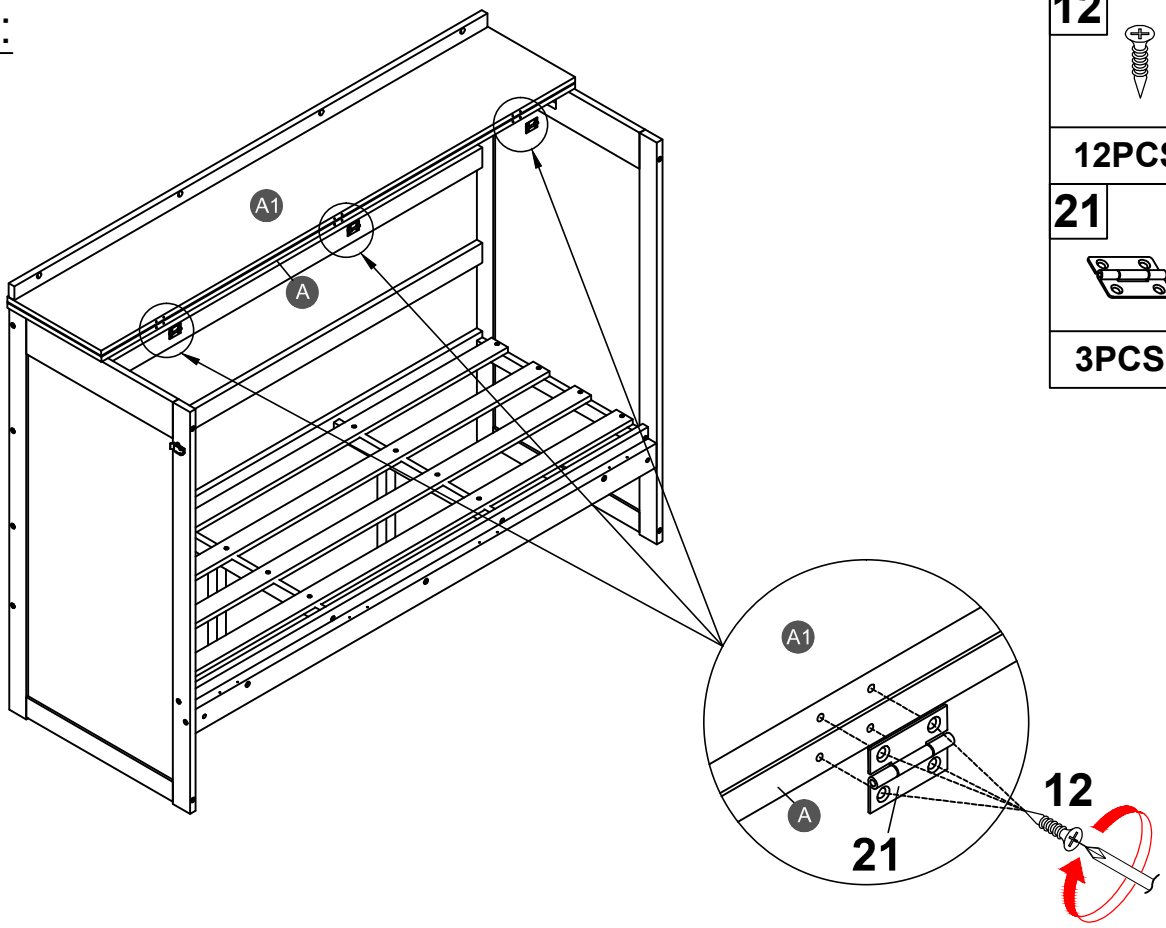

12

12PCS

21

3PCS

STEP 12:

12	29
2PCS	1PC

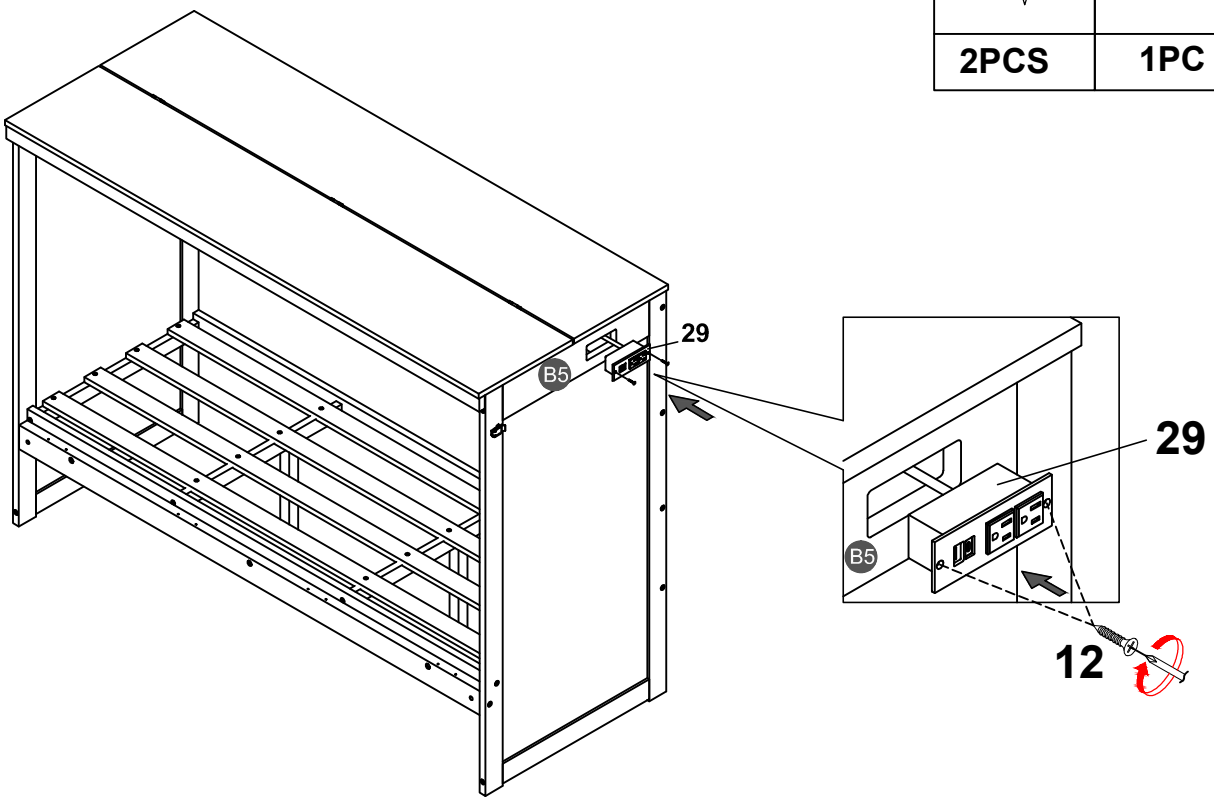

STEP 13:

13
36PCS

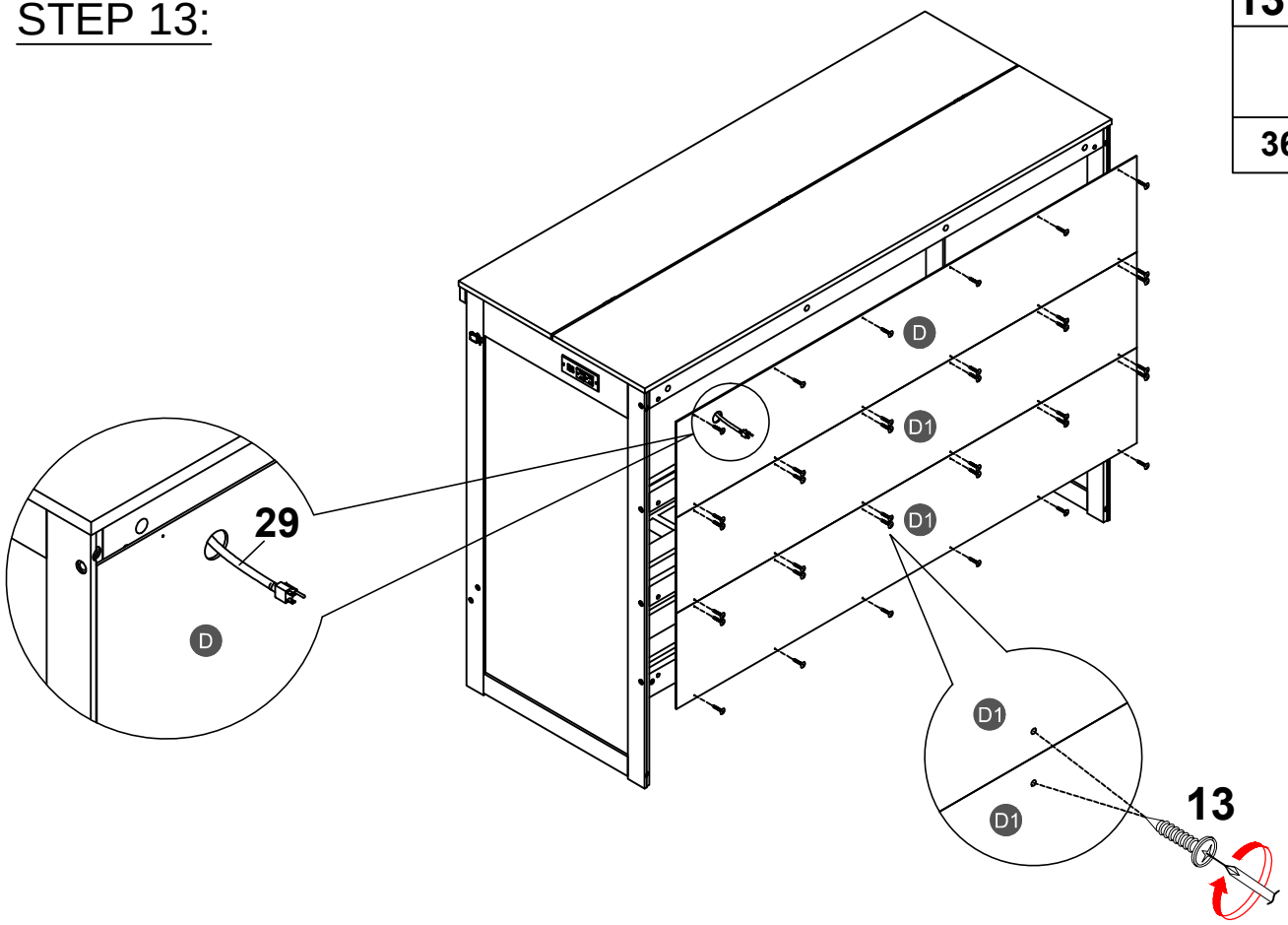

STEP 14:

1	5	9
8PCS	4PCS	4PCS

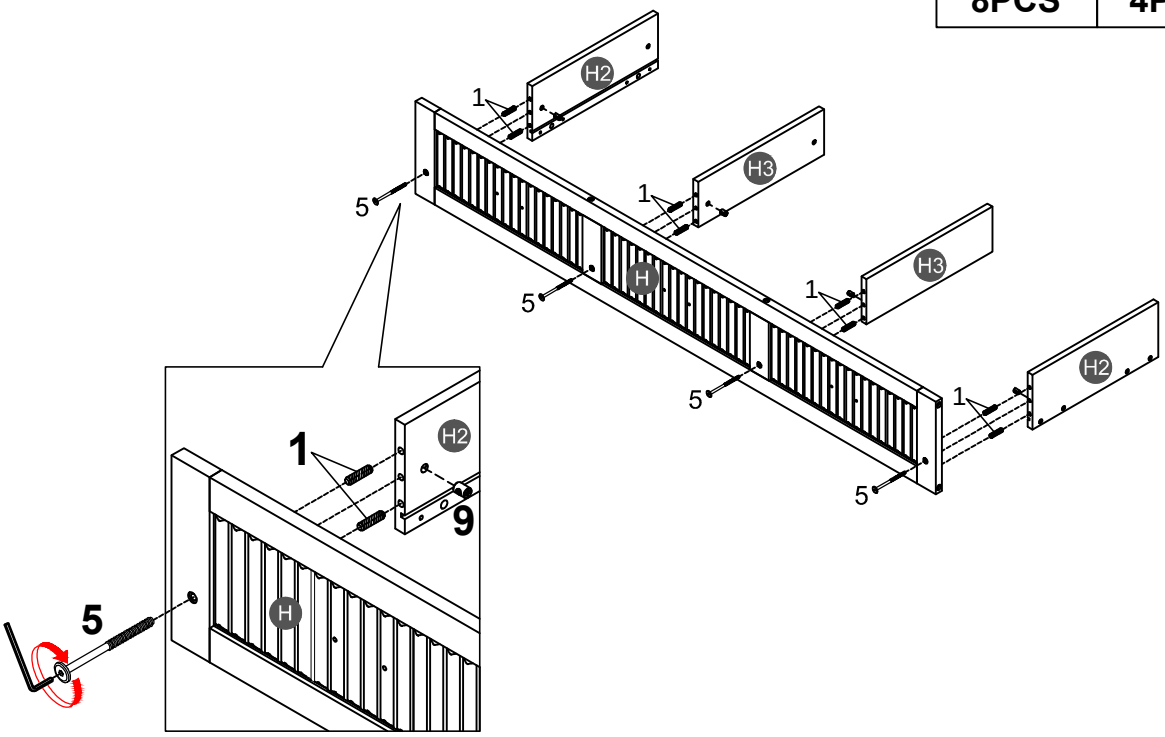

STEP 15:

1	5	9
16PCS	4PCS	4PCS

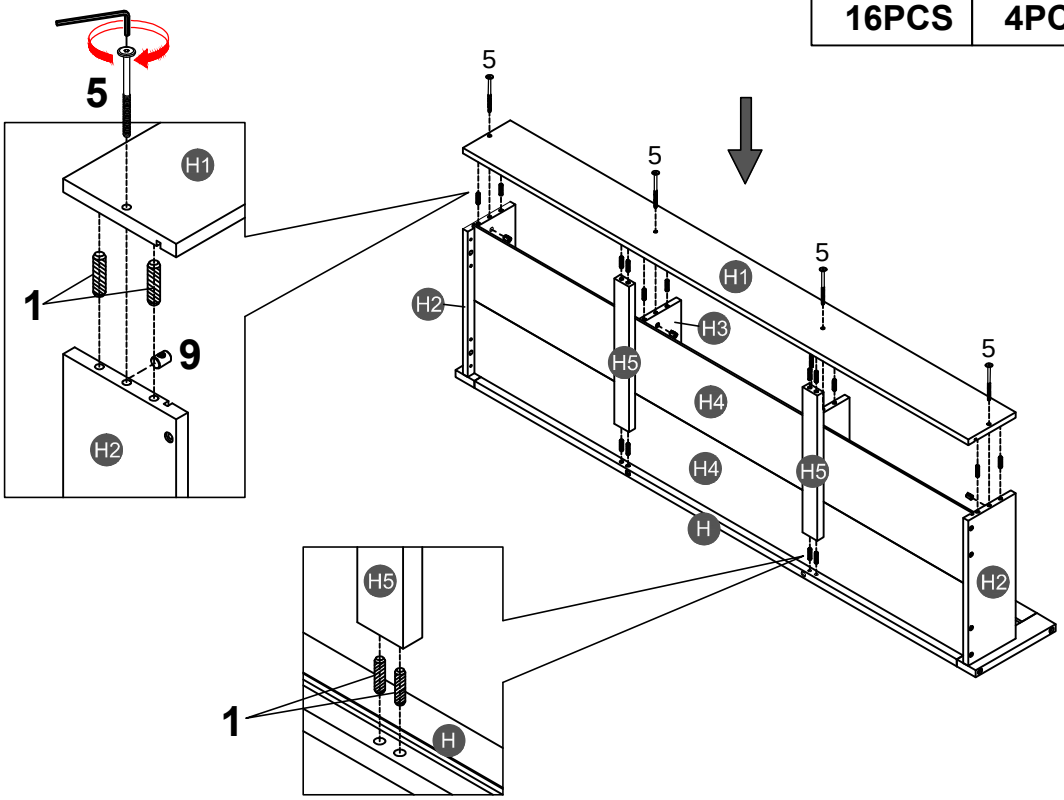

STEP 16:

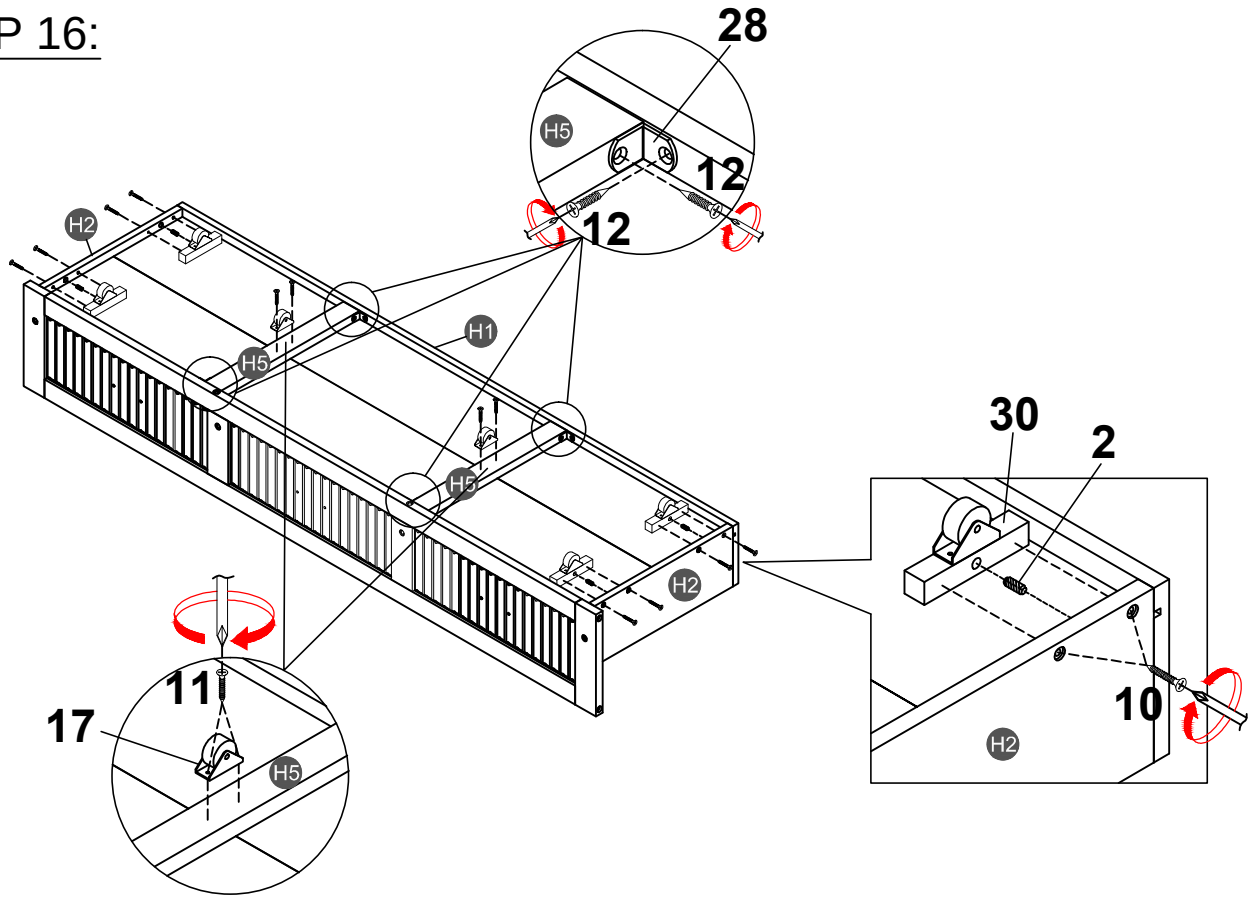

2	10	11	12	17	28	30
4PCS	8PCS	4PCS	8PCS	2PCS	4PCS	4PCS

14	15
6PCS	3PCS

STEP 17:

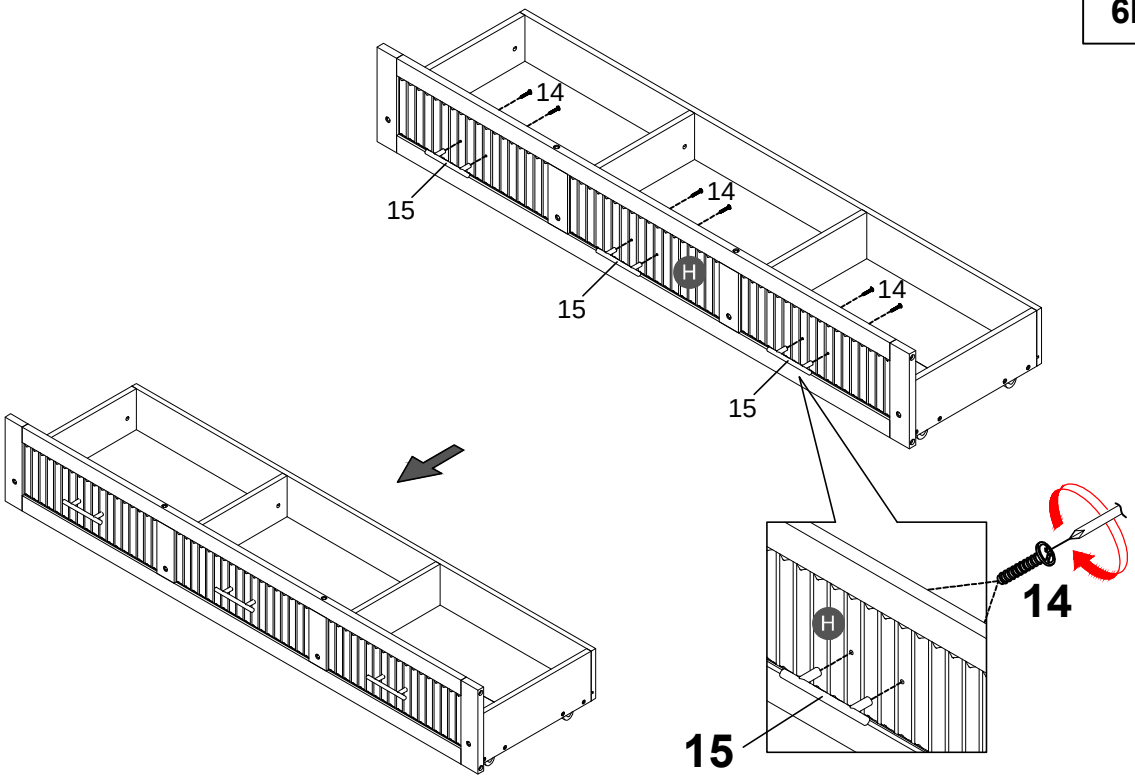

STEP 18:

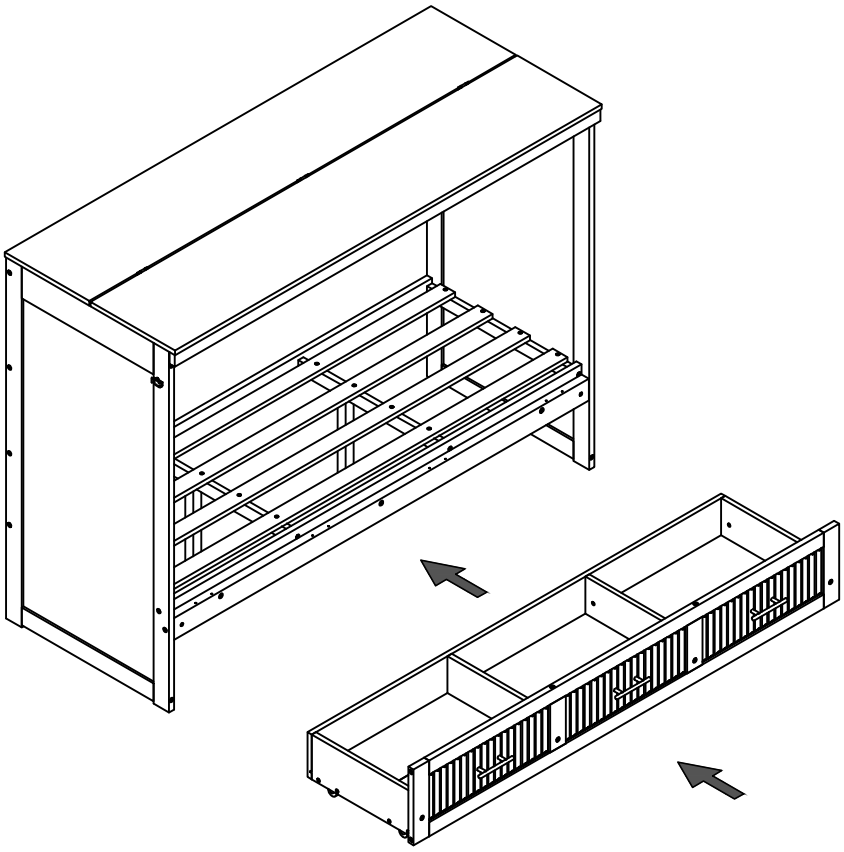

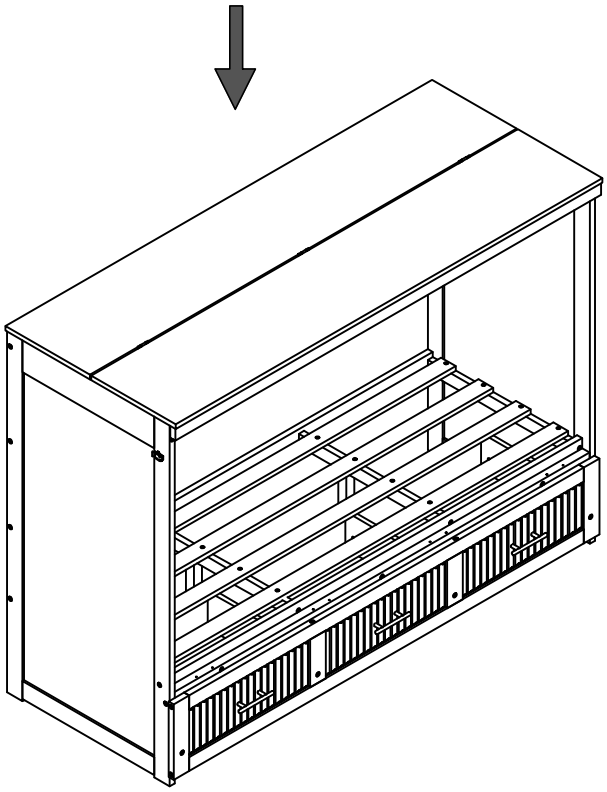

STEP 19:

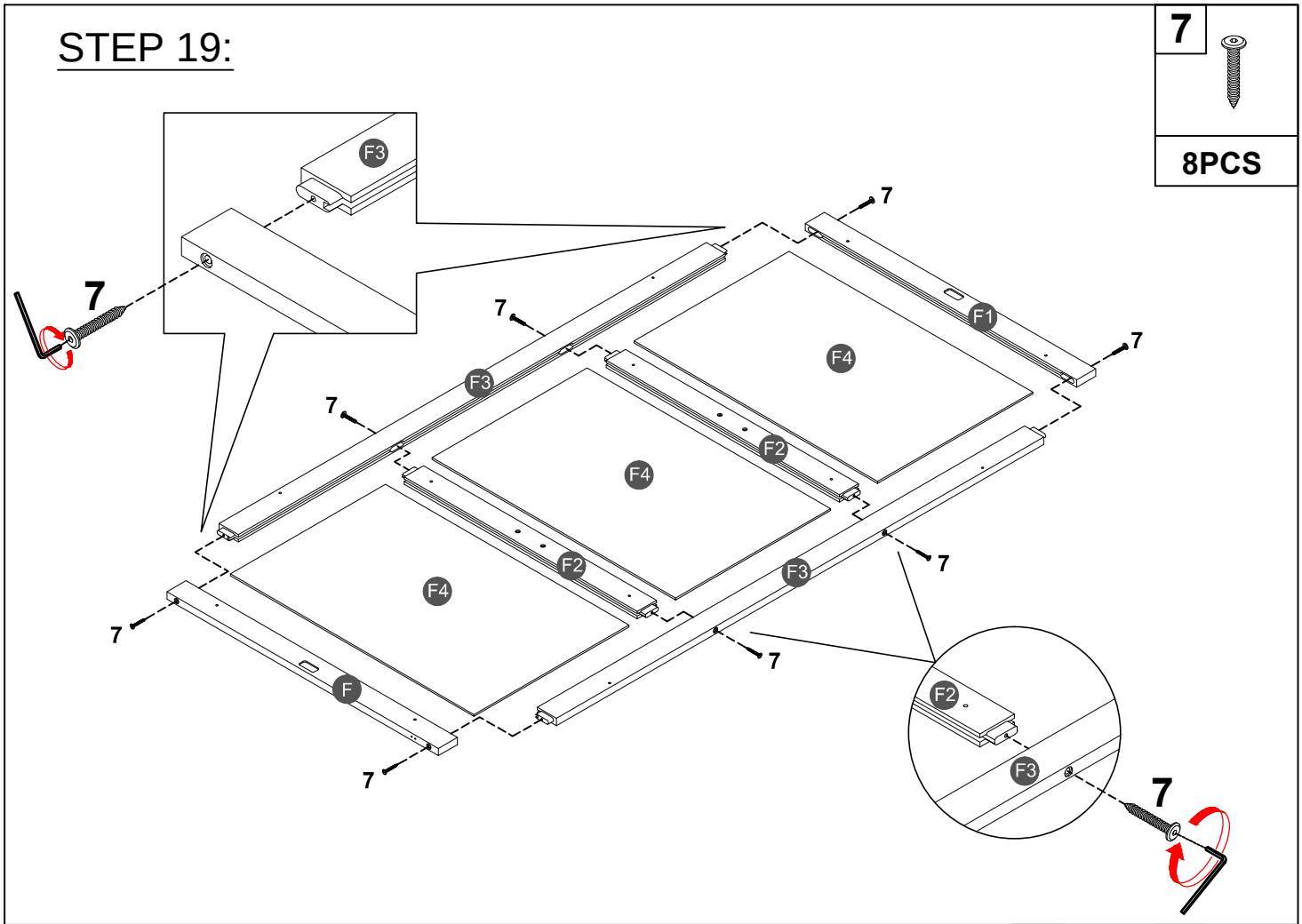

STEP 20:

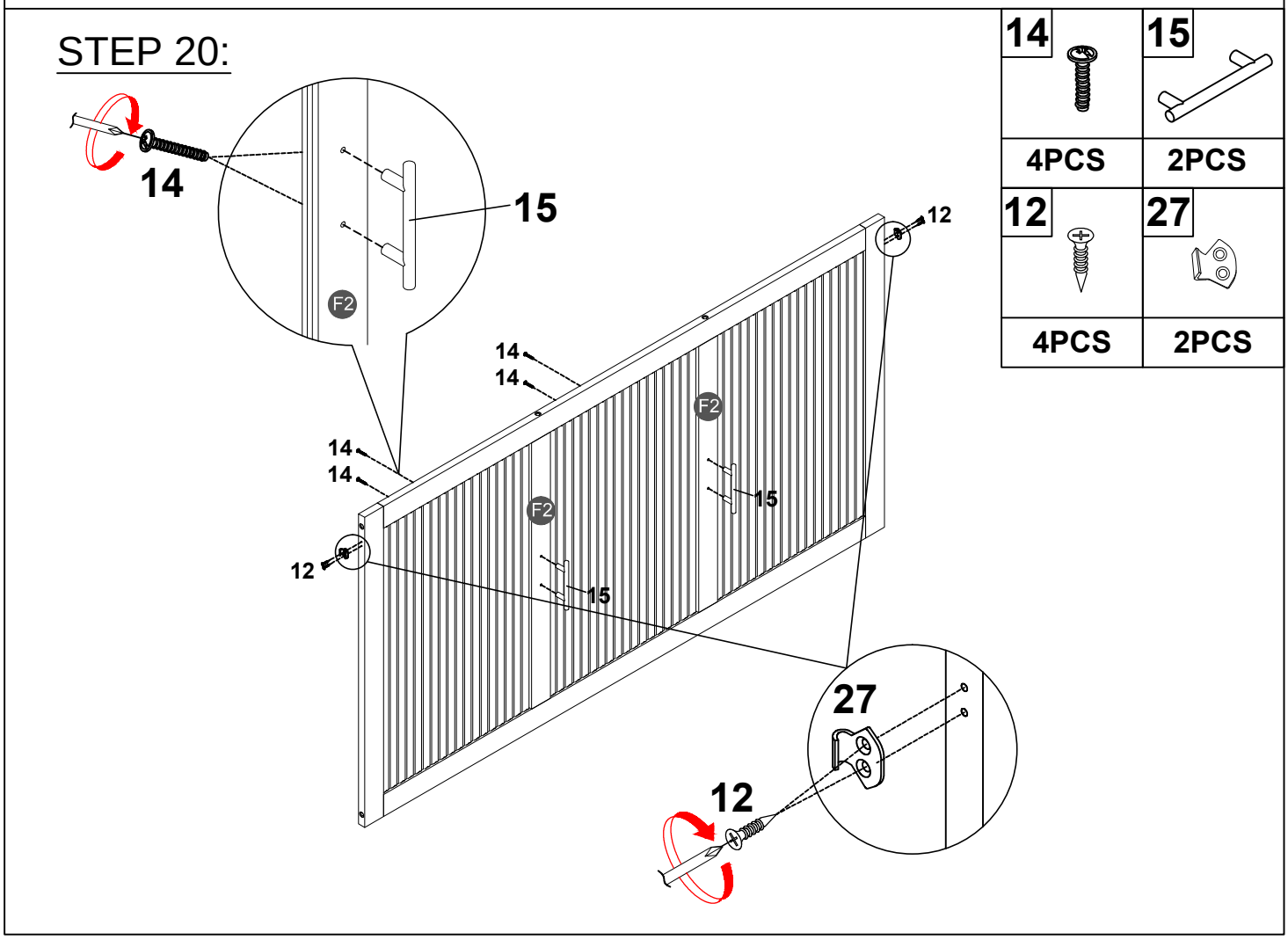

STEP 21:

3	4	9
4PCS	4PCS	8PCS

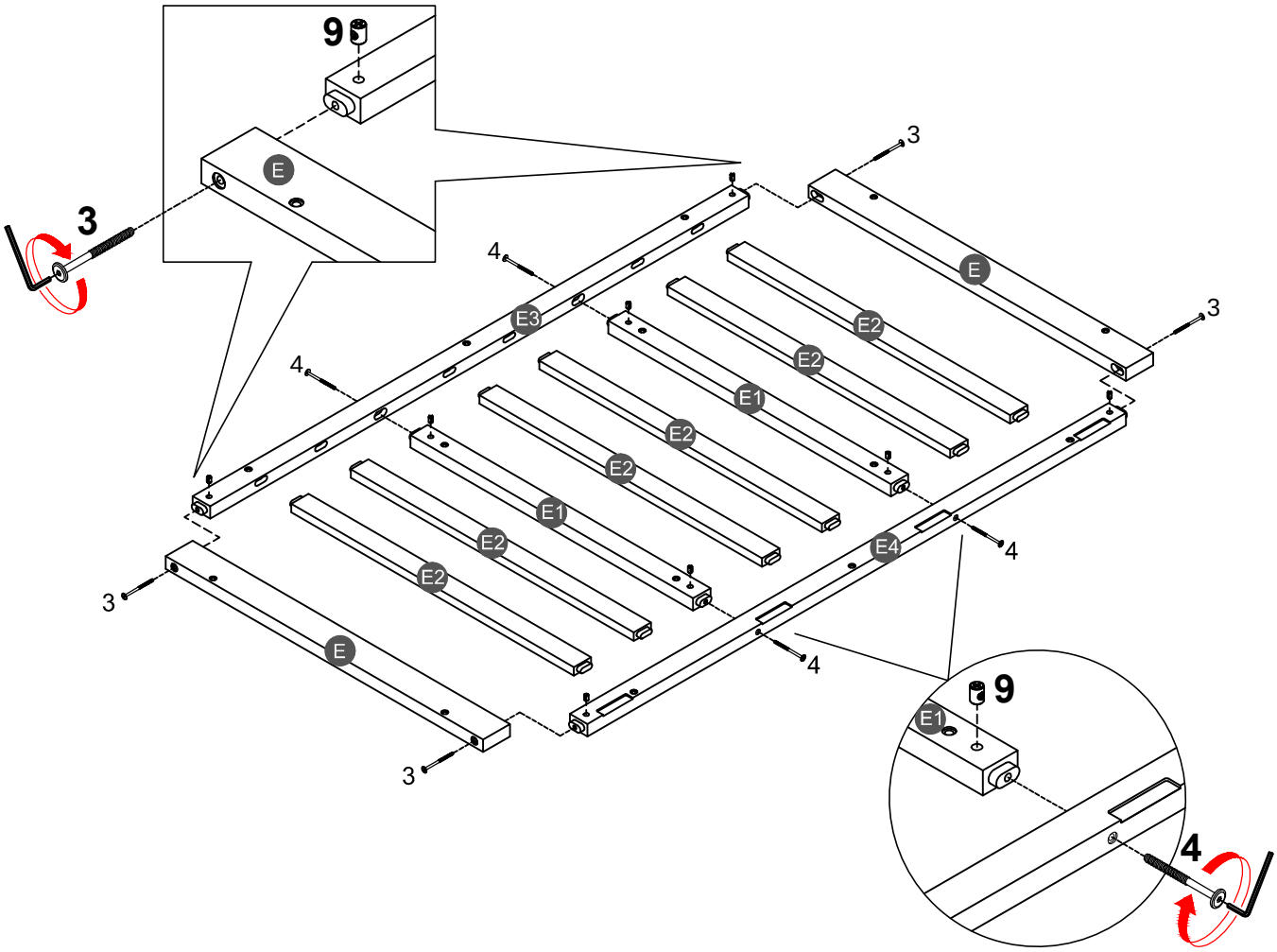

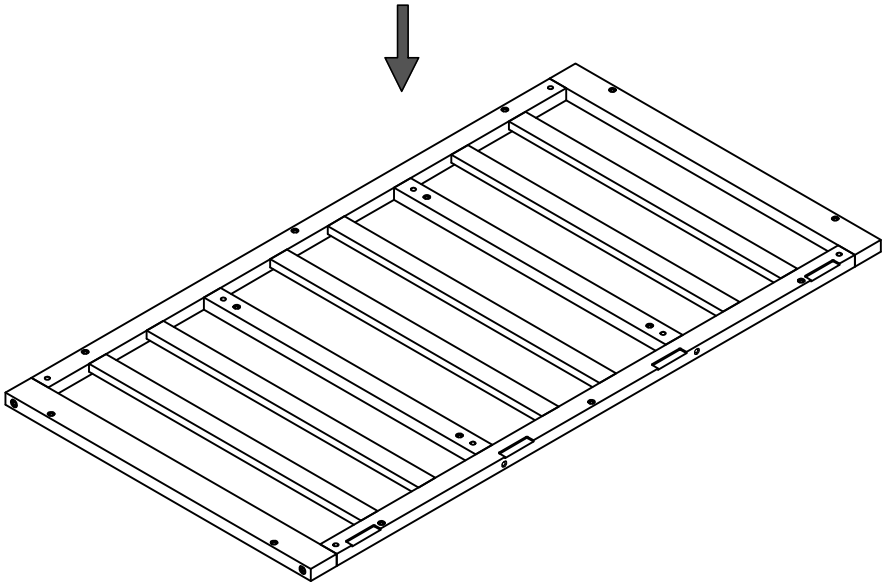

STEP 22:

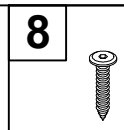

8

14PCS

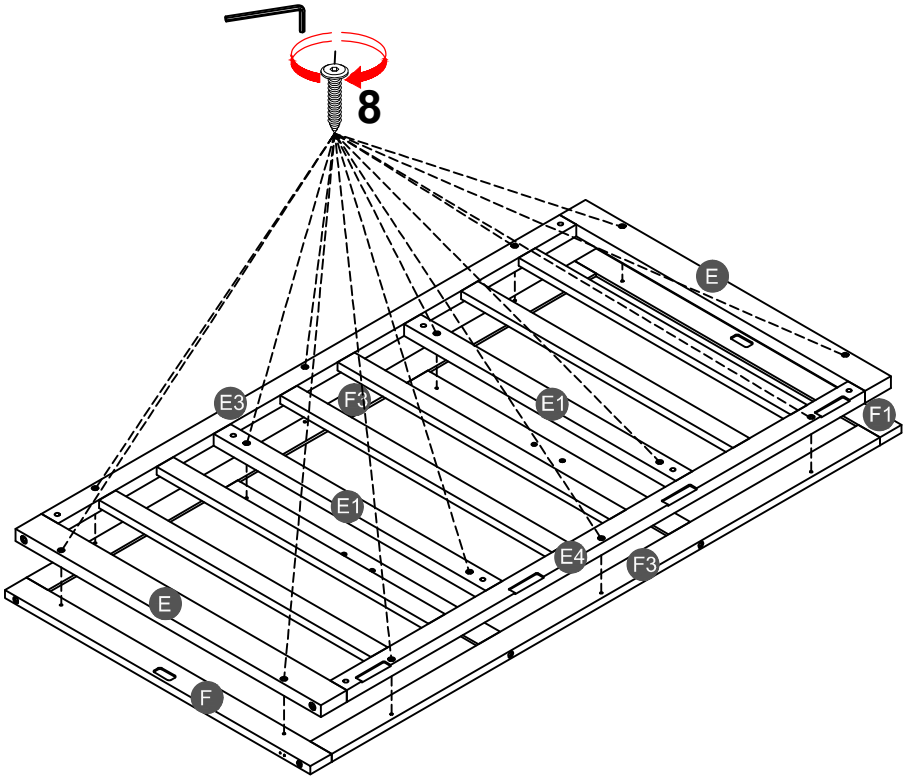

STEP 23:

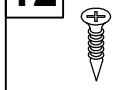

12

8PCS

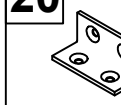

20

2PCS

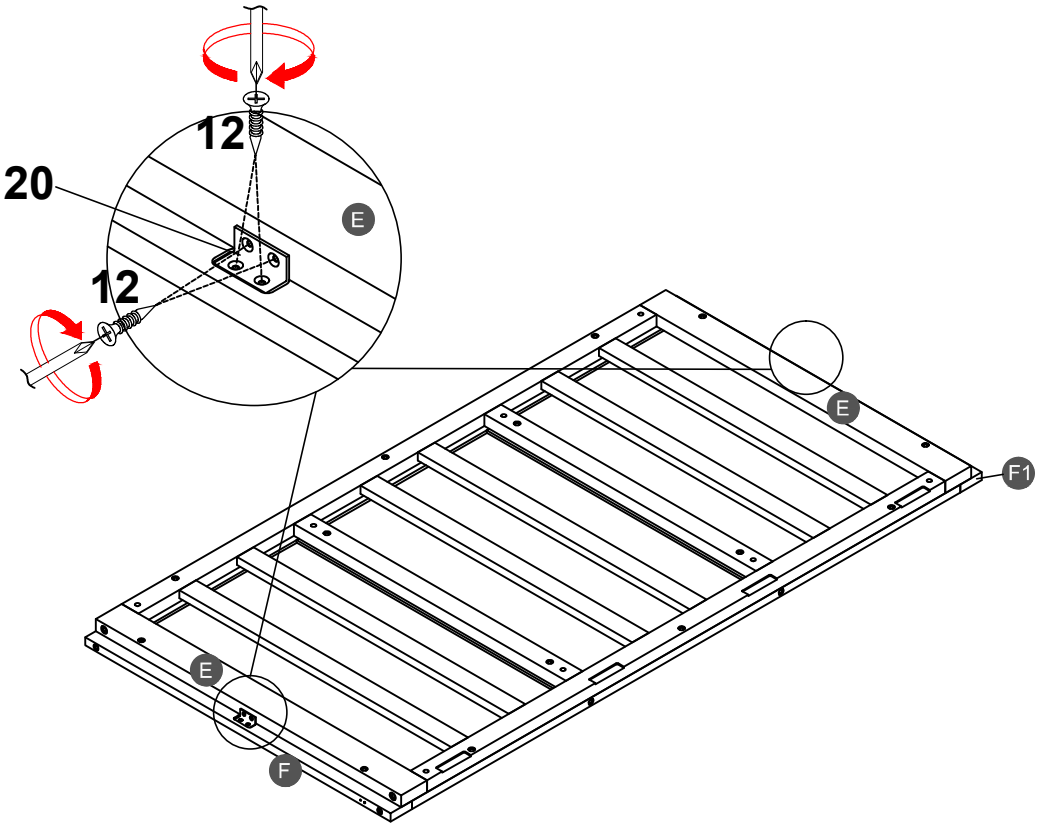

STEP 24:

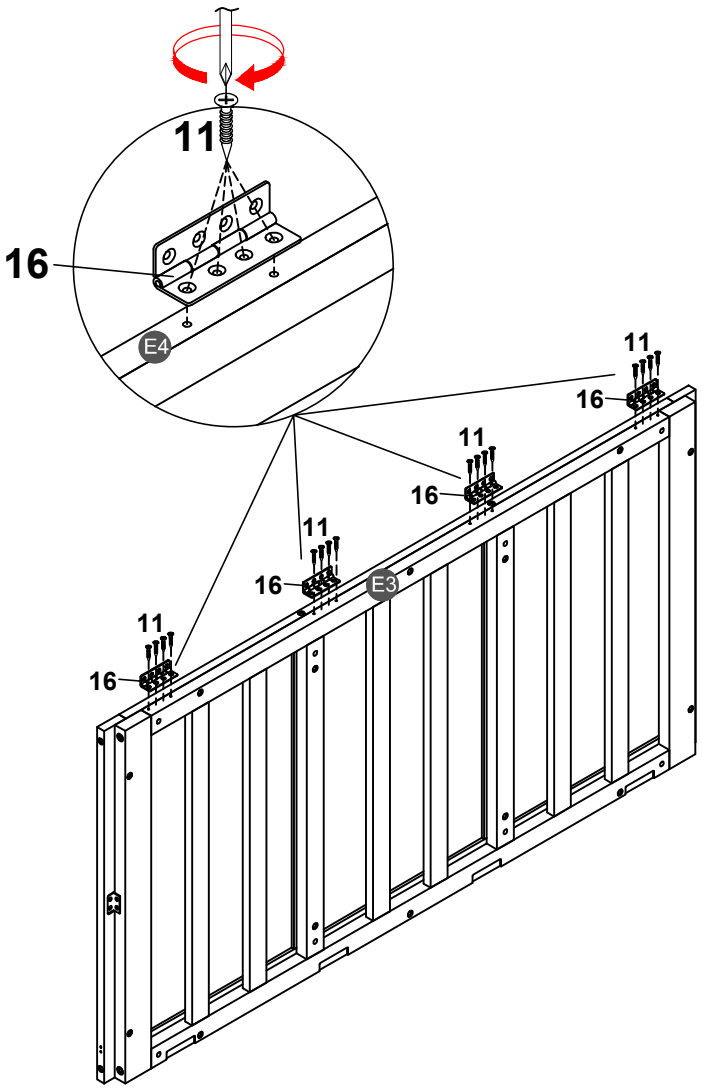

11	16
16PCS	4PCS

STEP 25:

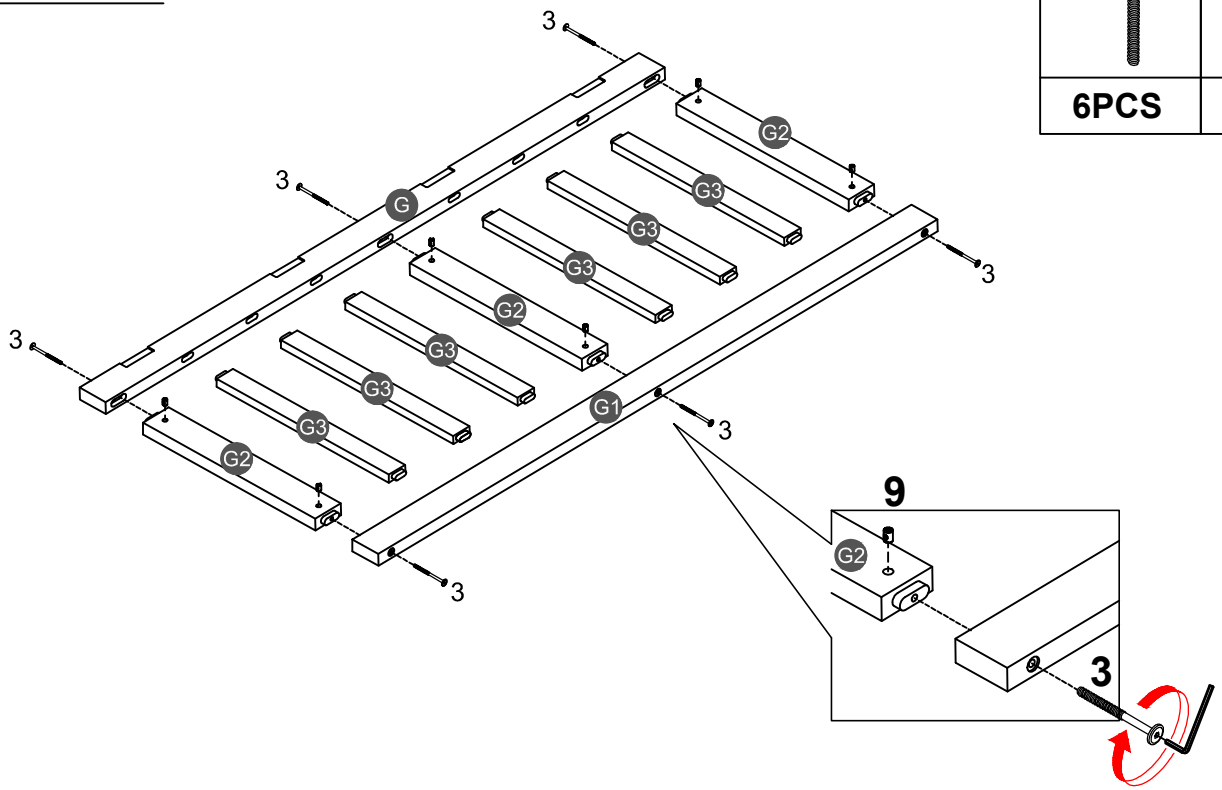

3	9
6PCS	6PCS

STEP 26:

11	16
	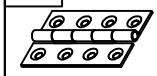
32PCS	4PCS

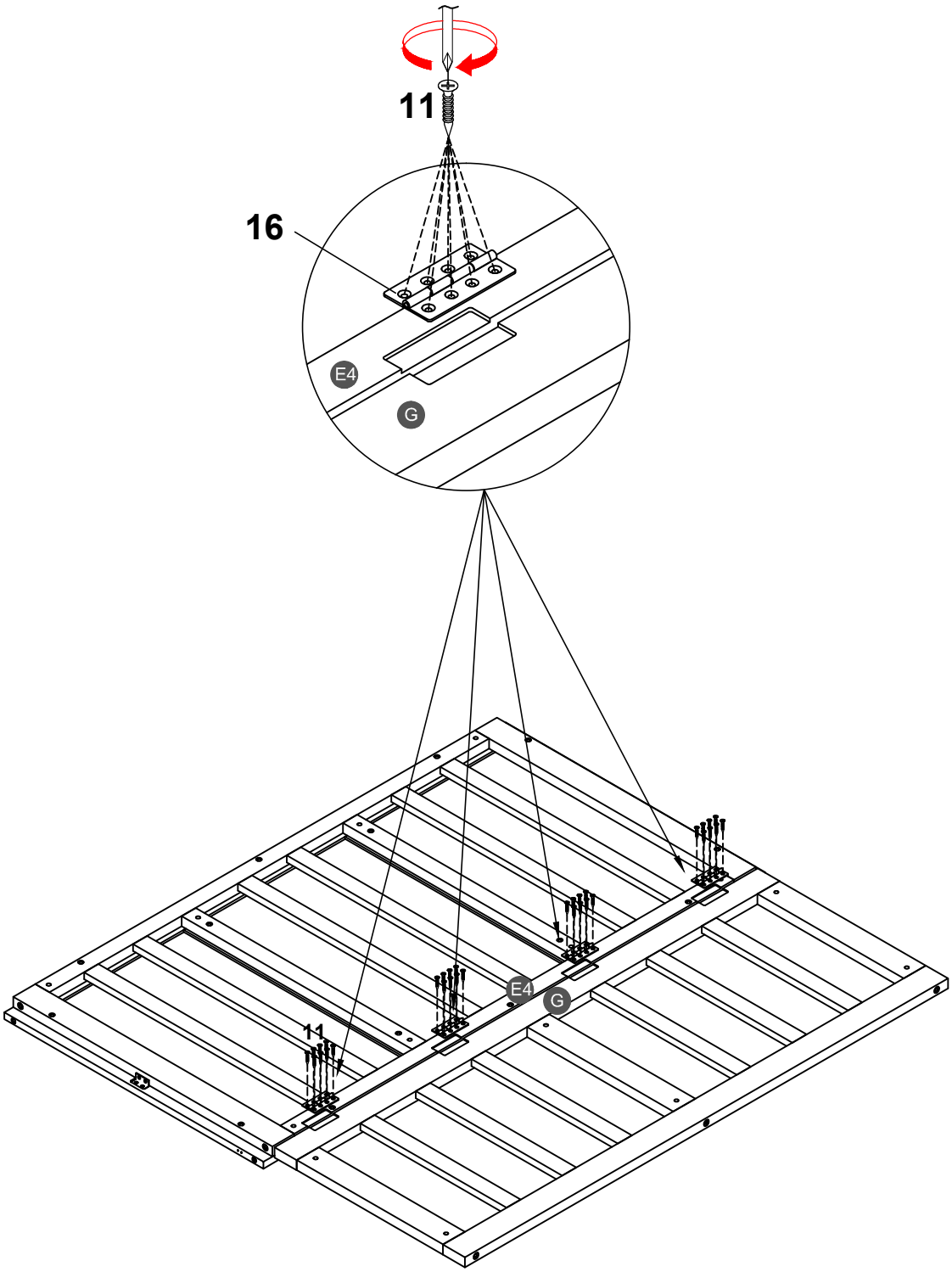

STEP 27:

4	9
2PCS	2PCS

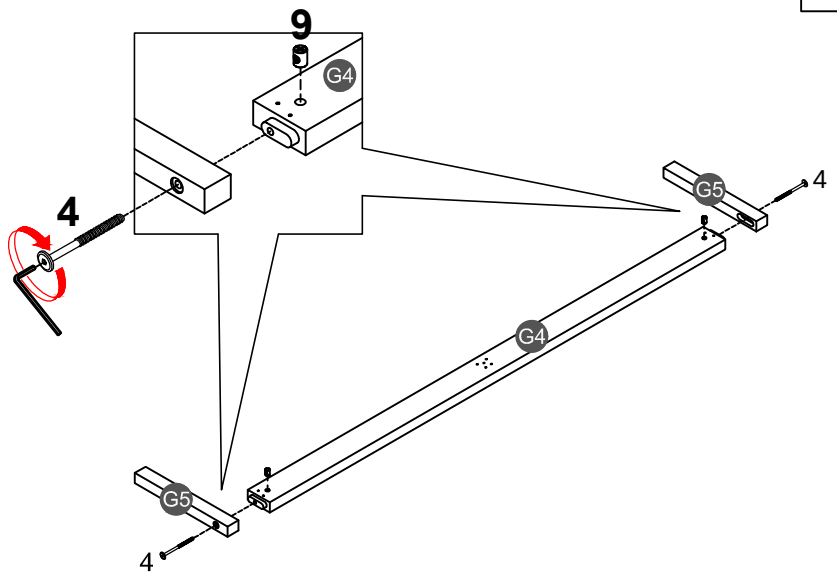

STEP 28:

11	18	19
13PCS	1PC	2PCS

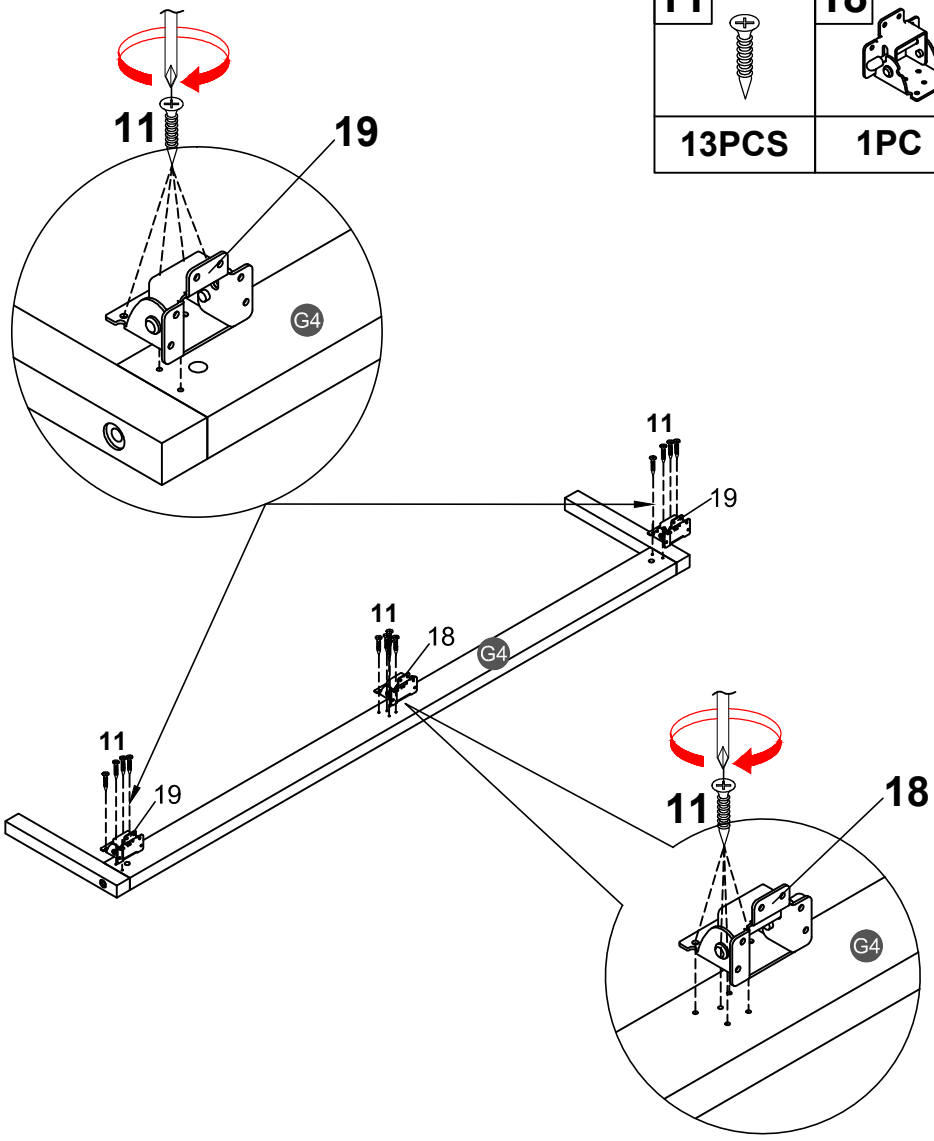

STEP 29:

11	18
15PCS	3PCS

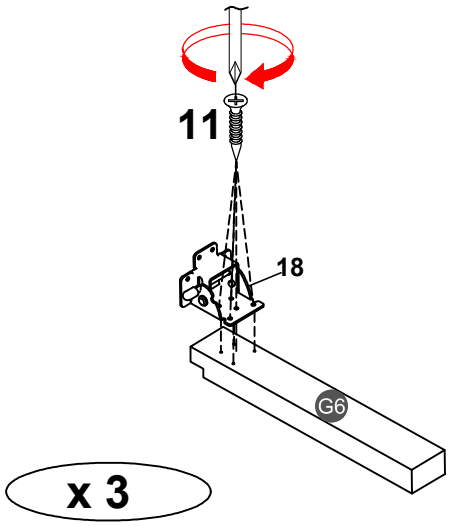

STEP 30:

11
36PCS

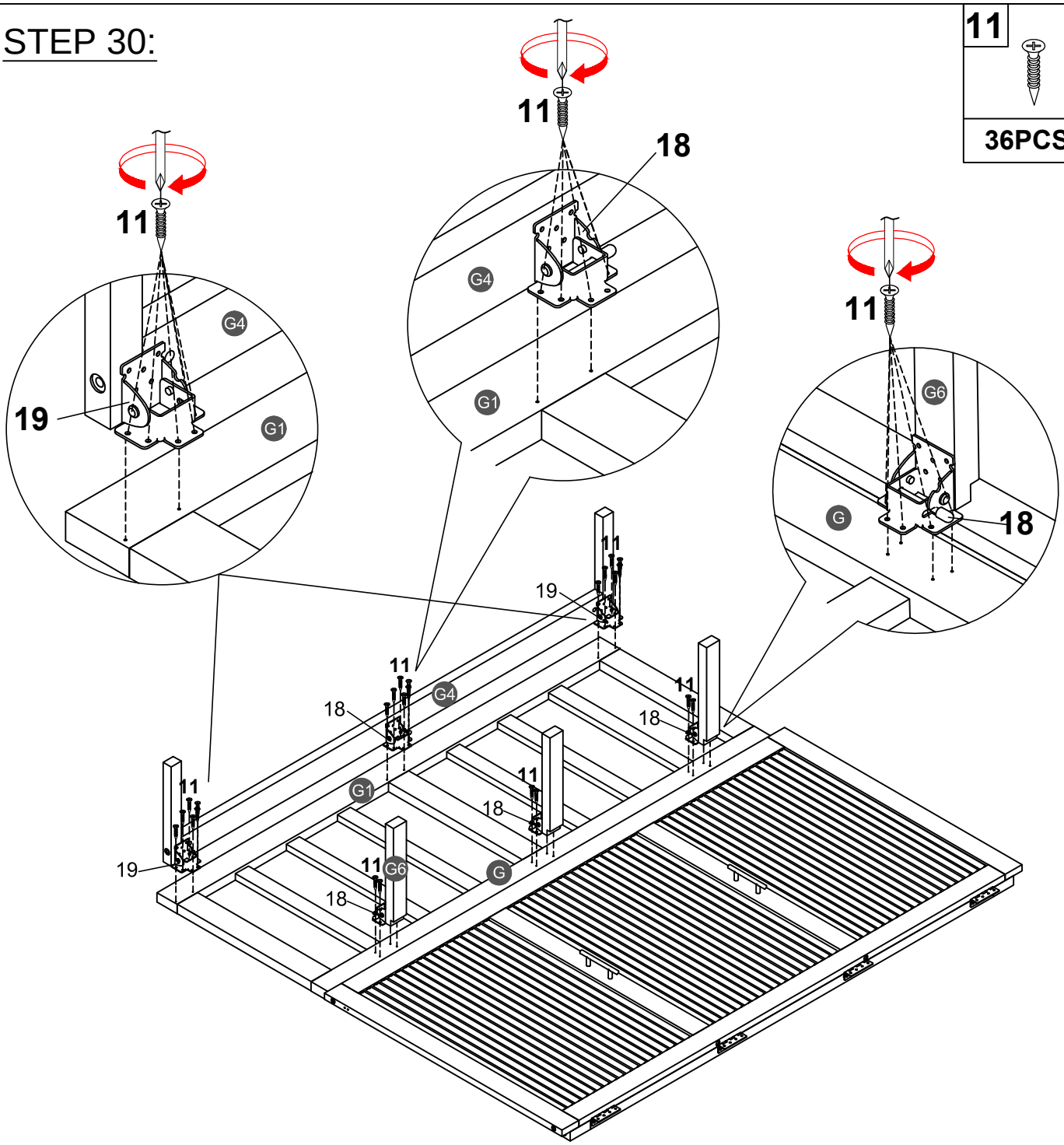

STEP 31:

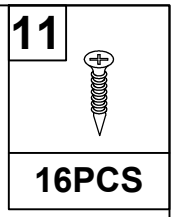

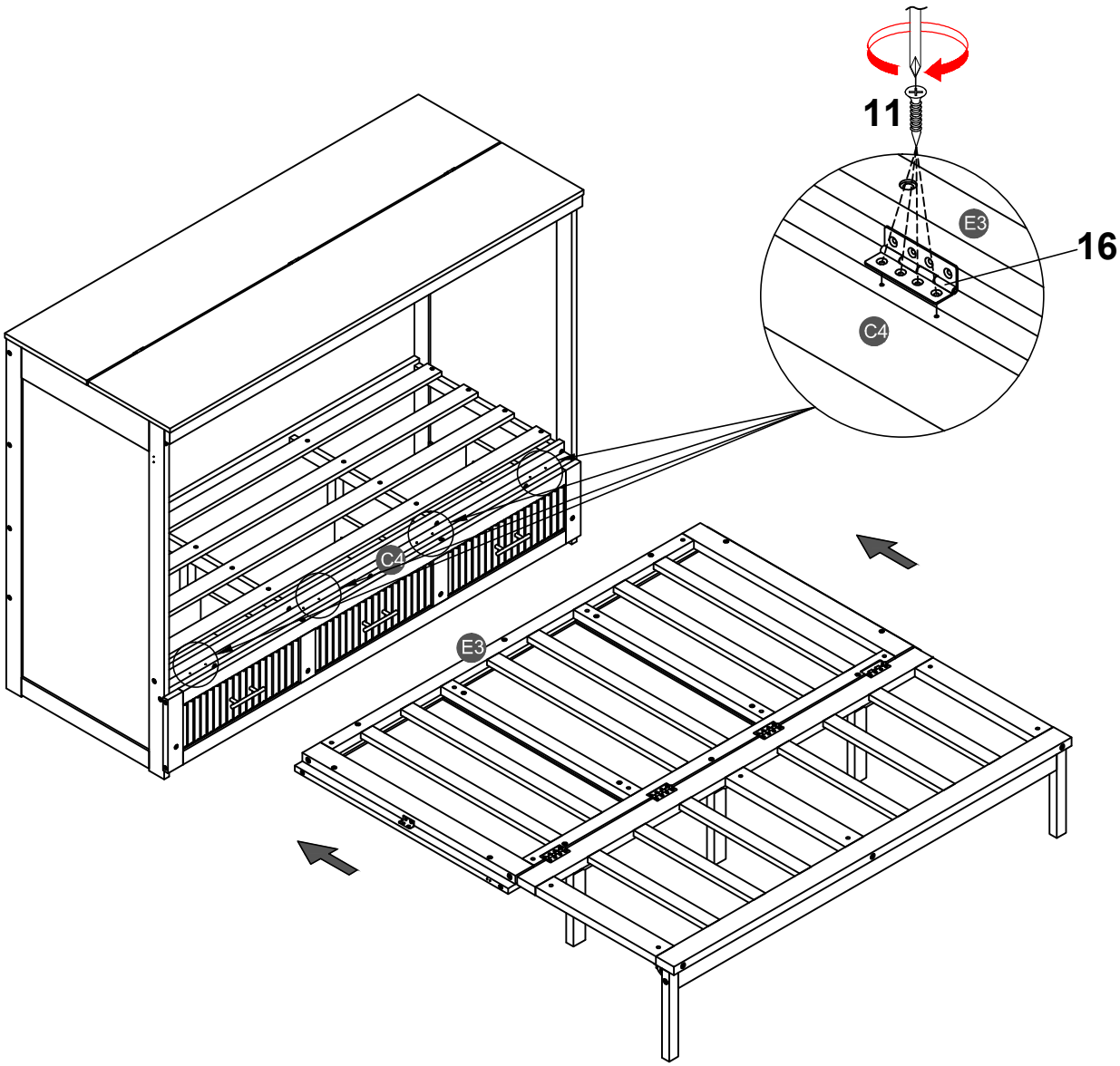

STEP 32:

TYPE 1

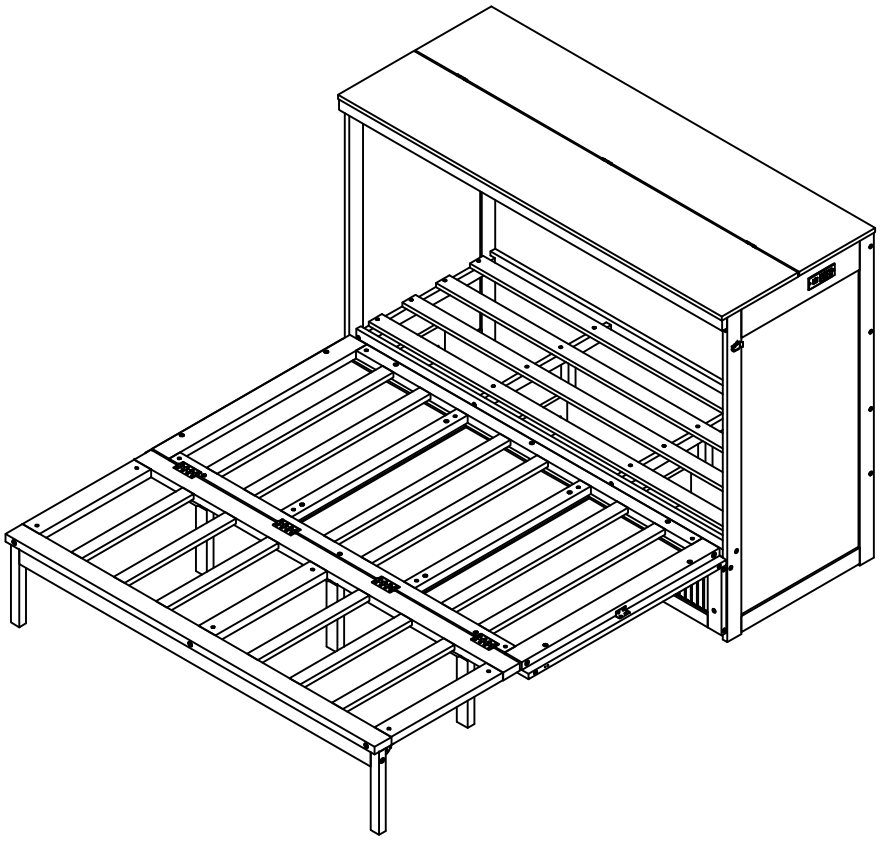

STEP 33:

TYPE 2

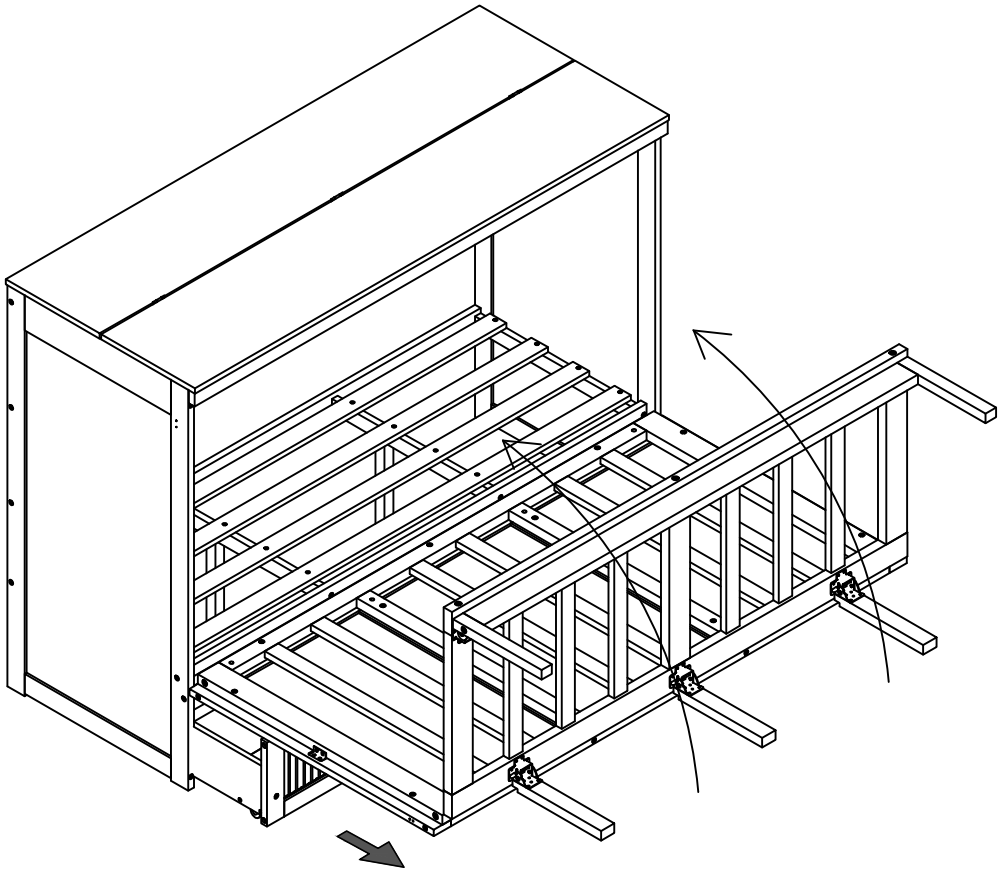

STEP 34:

TYPE 2

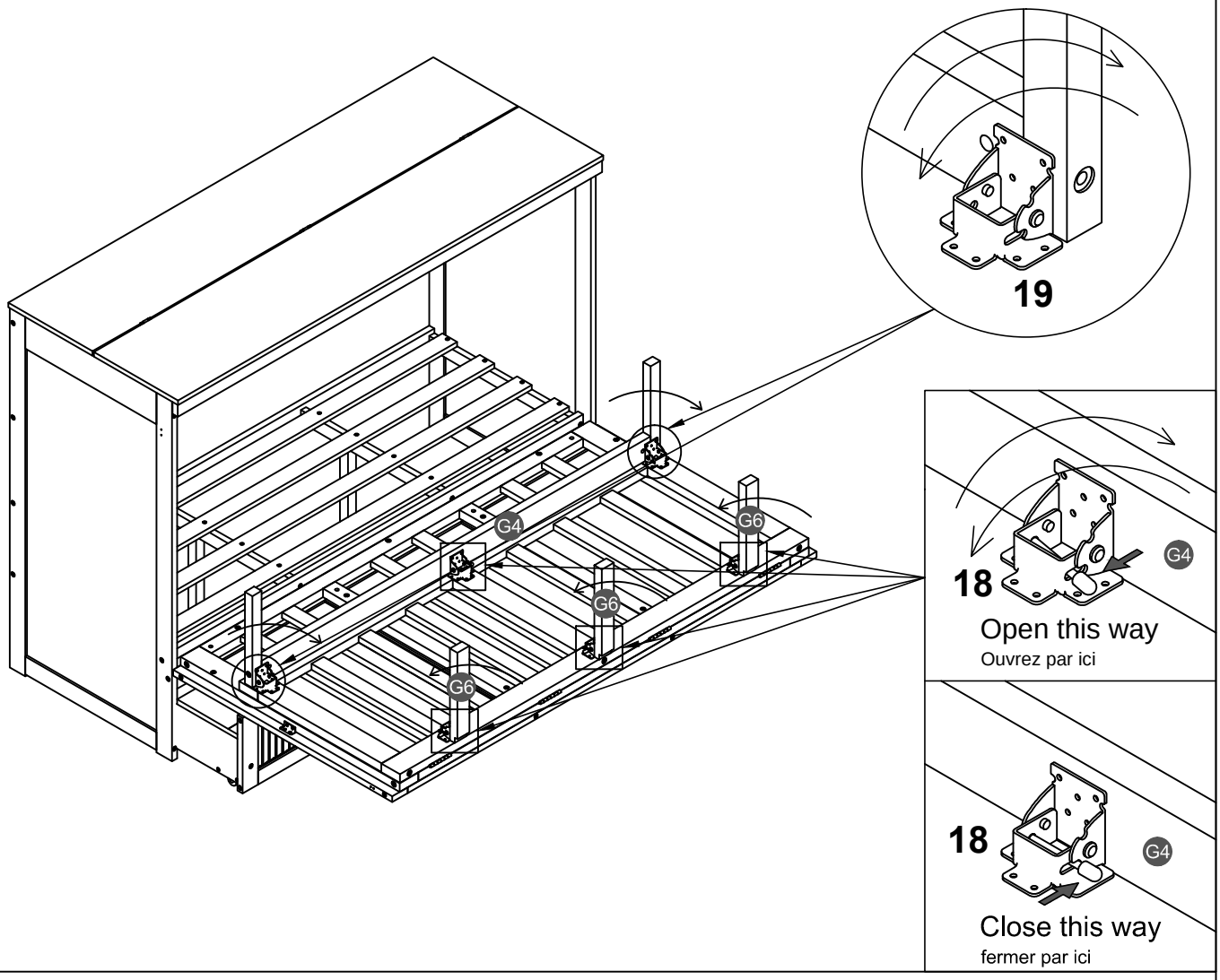

STEP 35:

TYPE 2

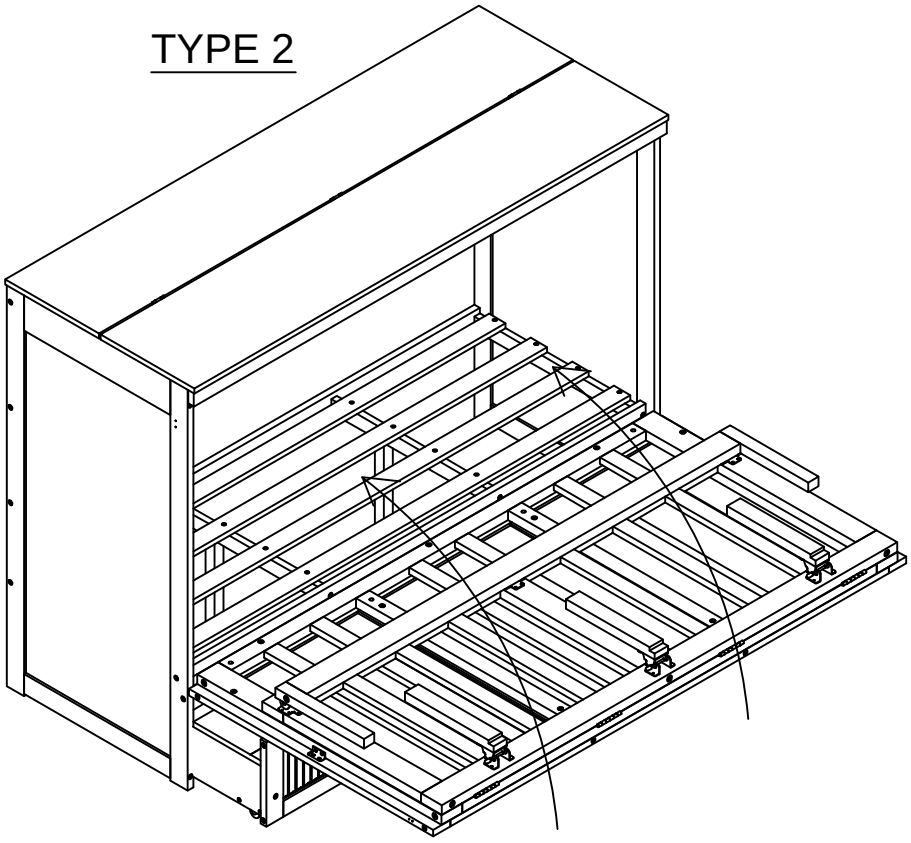

STEP 36:

TYPE 2

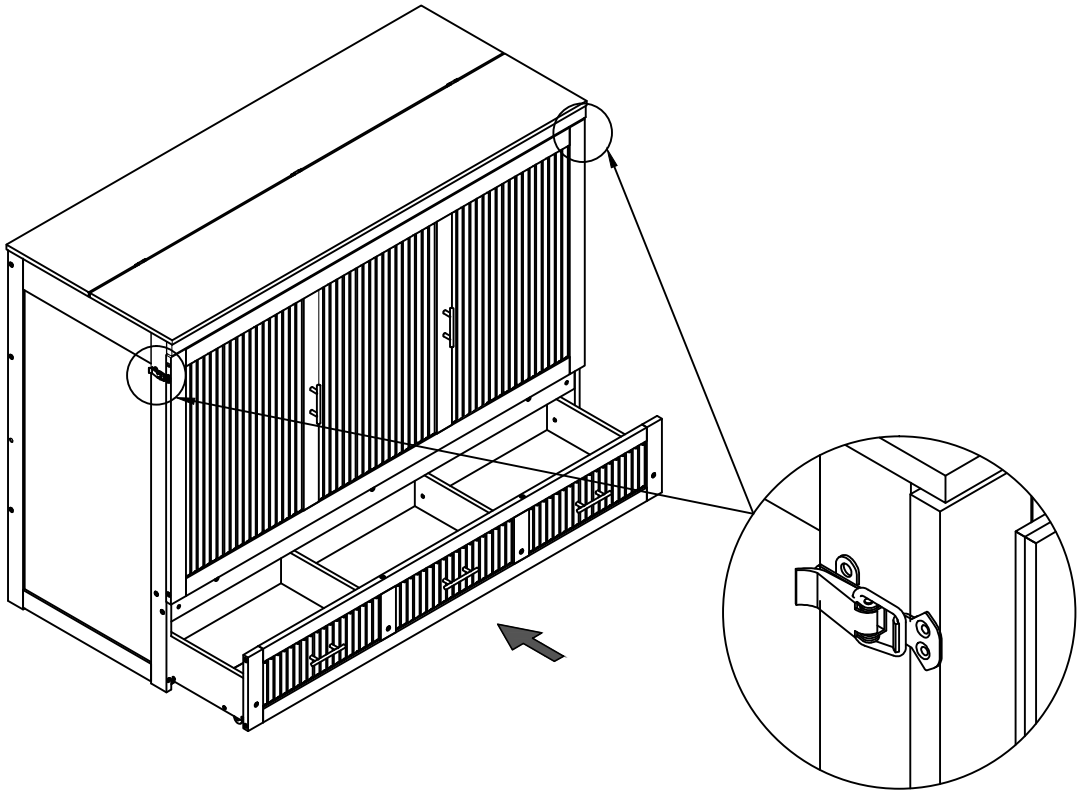

TYPE 2

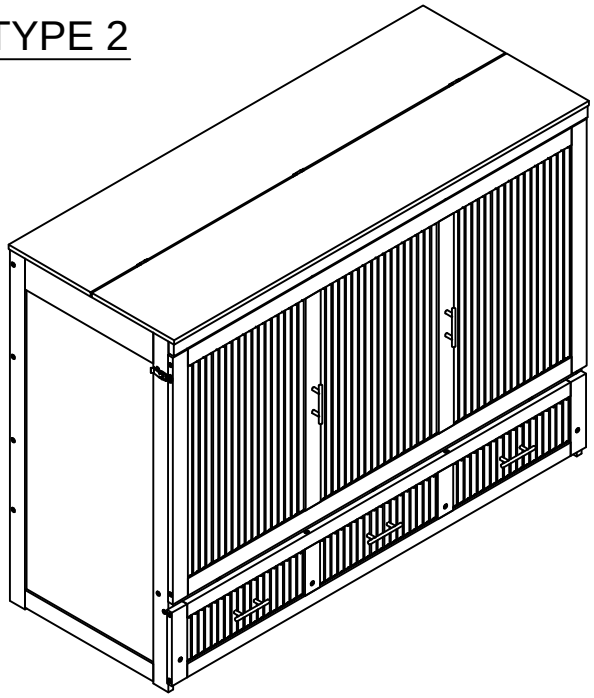

Make sure to tighten all the screws of the bed.

STEP A:

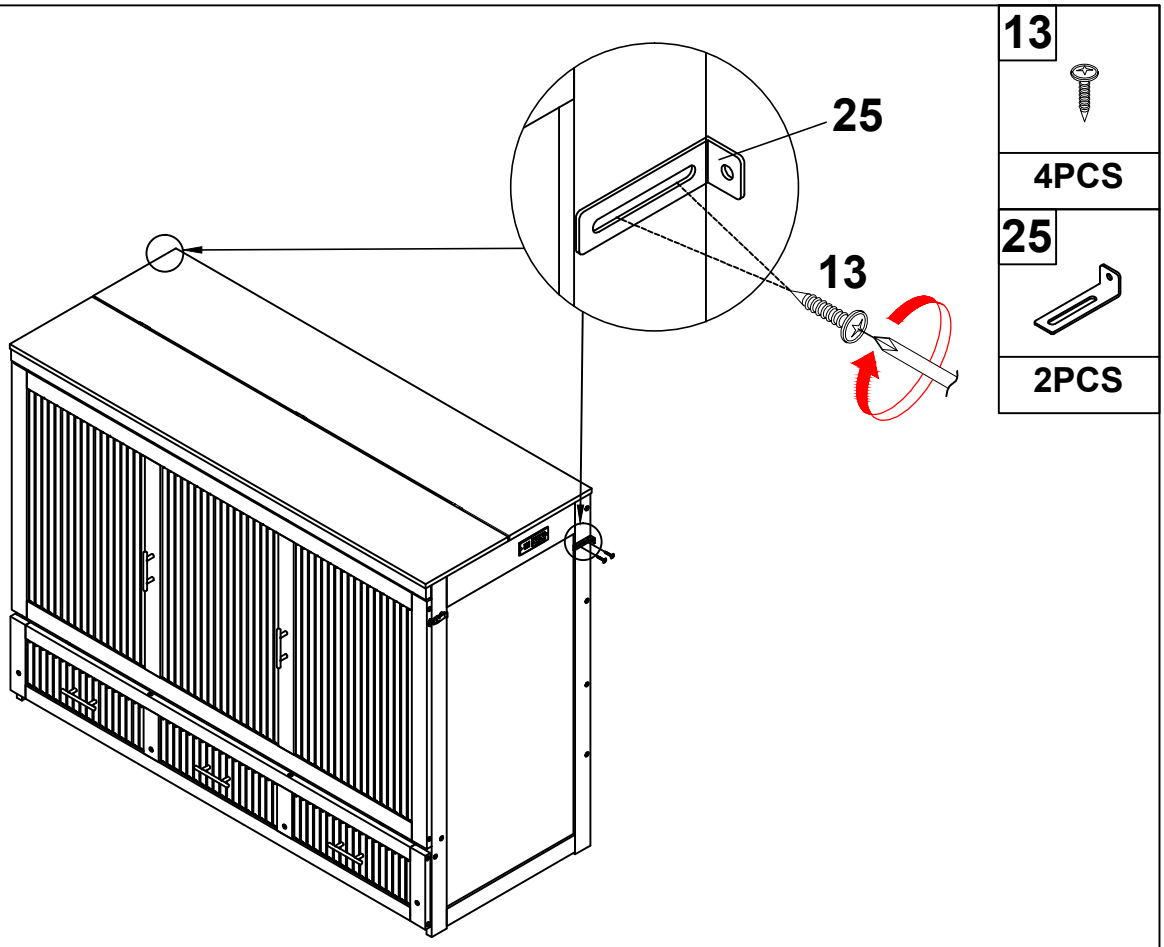

Installing the Anti-Tip Bracket.

STEP B:

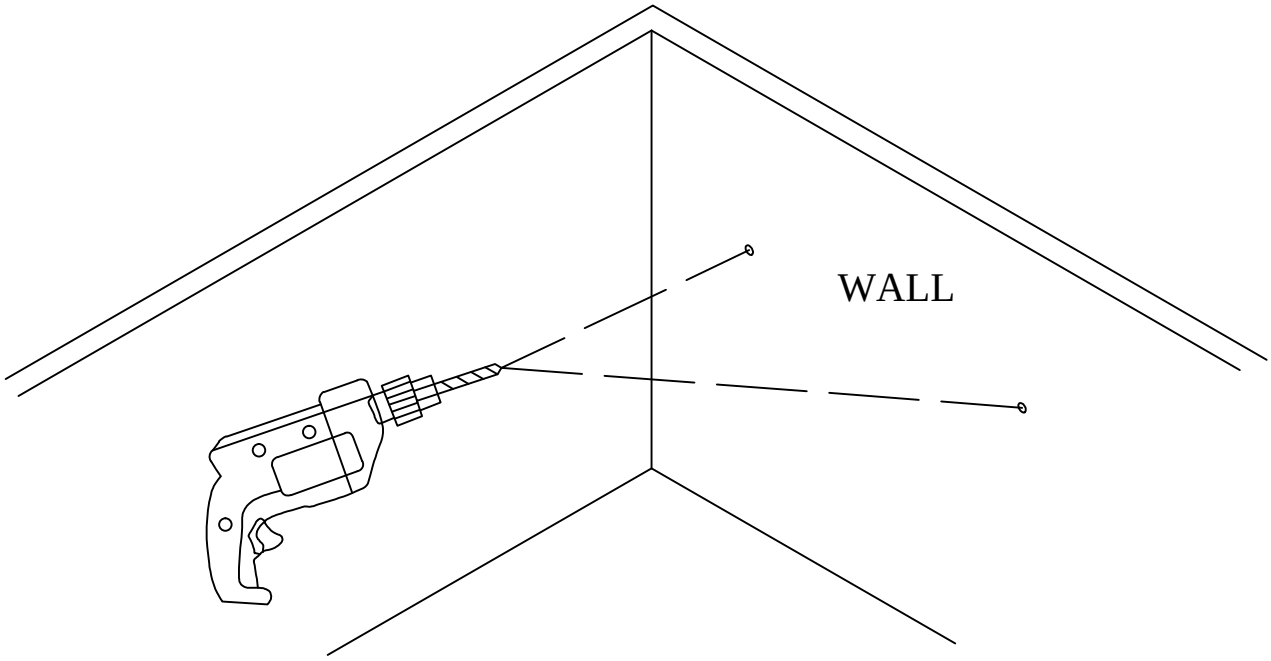

Drill holes in the wall.

STEP C:

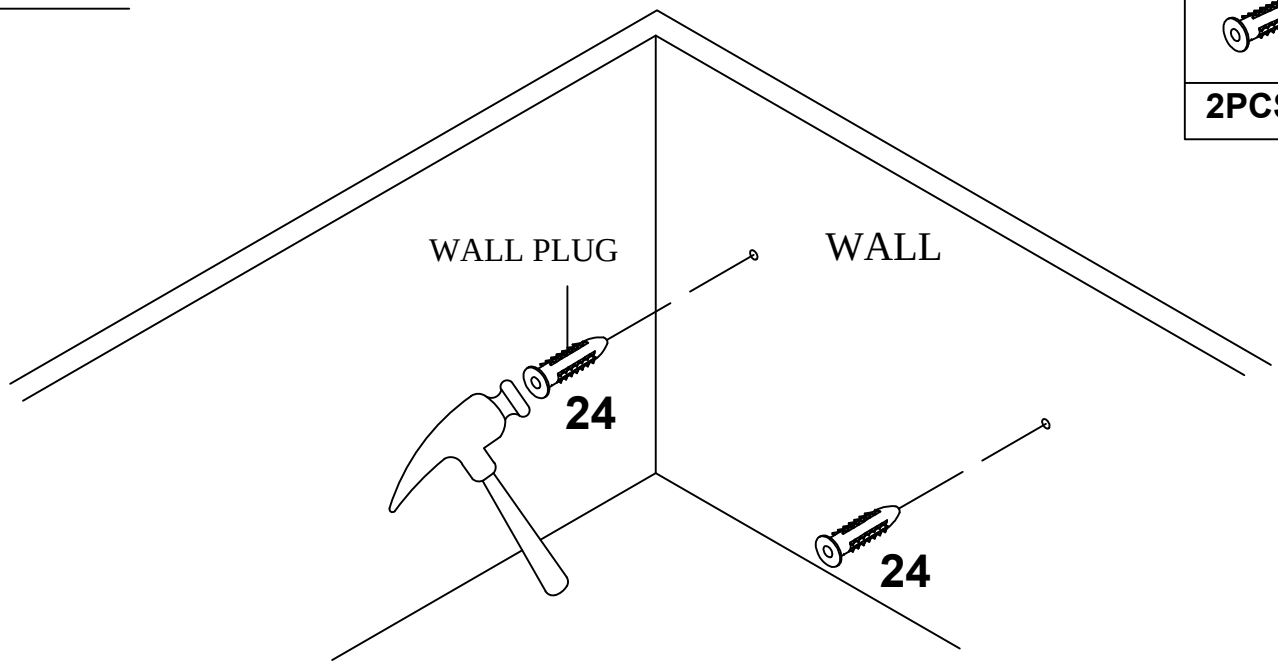

Tap plastic anchor in with a hammer or mallet.

STEP D:
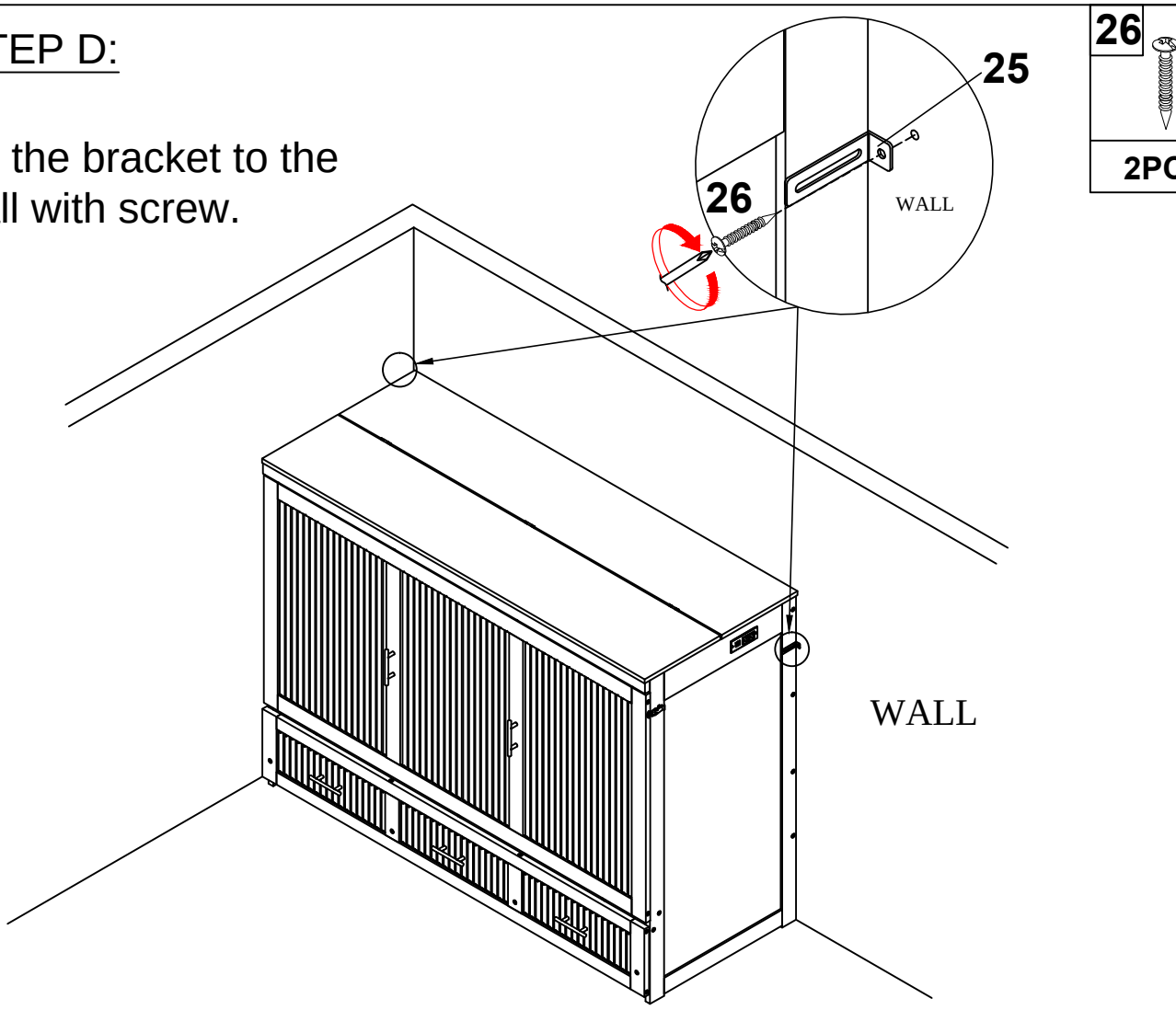
Fix the bracket to the wall with screw.