Accessories List

(1) Headrest

(2) Back

(3) Seat Cushion

(4) Split Base Tube

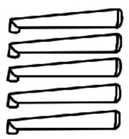

(5) Central Base Tube

(6) 2 Armrests

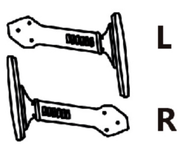

(7) Mechanism

(8) Keel

(9) 5 Castors

(10) Gas Lift

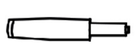

(11) Decorative Cover

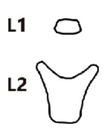

(12) 6 Flat Gaskets

(13) Allen Driver

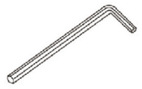

(14) 7 Screws
(M6×25mm)

(15) 3 Screws
(M8×35mm)

(16) 6 Screws
(M6×30mm)

(17) 12 Screws
(M6×20mm)

Notice [If any question, contact kerdom-service@outlook.com]

- This is a single chair, so please do not seat 2 or more persons, just seat only one person.
- Do not stand on the chair.
- Do not sit reverse or sit outside of the seat cushion.
- Check the screws once every 6 months, to make sure the screws are tight. Do not use the chair when the screws are loose.
- Please assemble according to the instructions.

Instructions for Use

Head Backrest adjustment

Tilt adjustment

Down Adjustment

Up Adjustment

Thanks for purchasing our products. Please read this manual before assembly.
And please assemble in order. After the assembly, keep the instruction properly.
Make sure all the narts are concluded (18 kinds in total)

Assembly Instruction

Please assemble in a wide and flat place.

Step 1

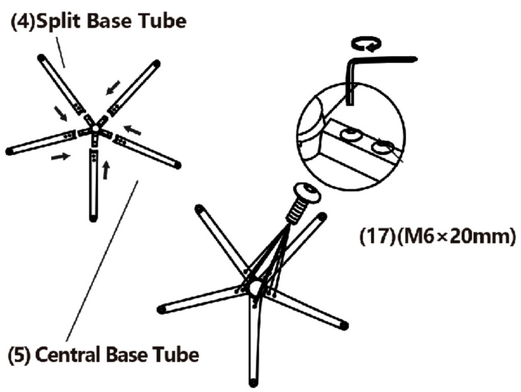

Take out Split Base Tube (4) and Central Base Tube (5). Insert Split Base Tube (4) into Central Base Tube (5) as shown. You can see there are two screw holes. Align with the holes, tighten Screws M6X20mm (17) with Allen Driver (13) to fix 5 Split Base Tube (4) to Central Base Tube (5). Repeat five times.

Step 2

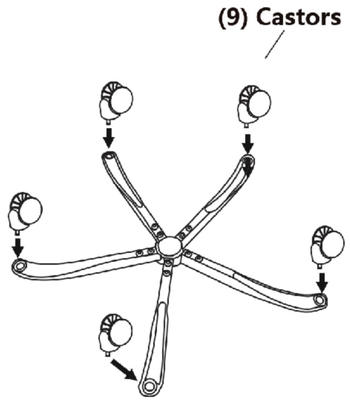

Take out Castors (9). Insert Castors (9) into part of Step 1 as shown. There are 5 Castors (9) need to be inserted.

∗ Caution: Confirm Castors (9) must be inserted deeply. Otherwise the casters could easily fall out and the chair could fall down.

Step 3

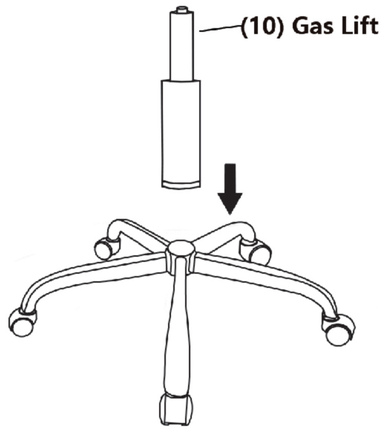

Take out Gas Lift（10）.Put Gas lift(10) into the hole of Central Base Tube(5)as shown. Put it aside and we'll use it in Step 8

Step 4

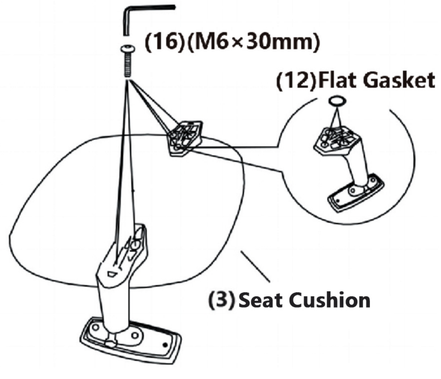

Take out the seat cushion (3). Place the armrest (6) under the seat cushion (3) as shown in the picture. Three screw holes can be seen. Align the holes, and tighten the screws M6X30mm (16) and Flat Gasket (12) with an Allen screwdriver of the seat cushion (3).

* Note: There is a FRONT sticker on the front of the seat cushion (3).

Step 5

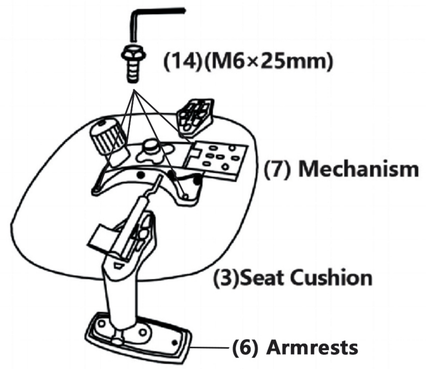

Take out Mechanism (7). Put Mechanism (7) on the bottom of Seat Cushion (3) as shown. You can see there are four screw holes. Align with the holes, tighten Screws M6X25mm (14) with Allen Driver (13) to fix Mechanism (7) to the bottom of Seat Cushion (3).

Step 6

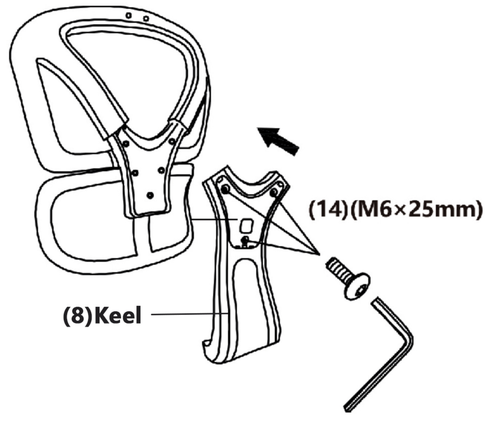

Take out Back (2). You can see there are three screw holes as shown. Align with the holes, tighten Screws M6X25mm (14) with Allen Driver (13) to fix Back (2) to Keel (8)

Step 7

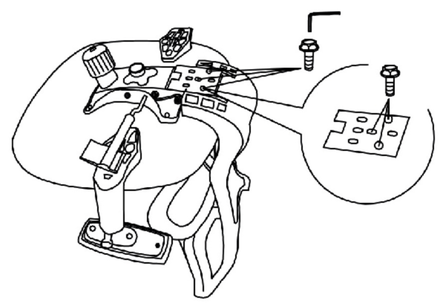

Turn the keel (8) and the back (2) assembled in step 6 over, align the 3 screw holes at the bottom with the screw holes of Mechanism (7), and tighten the M8*35mm (15).

Step 8

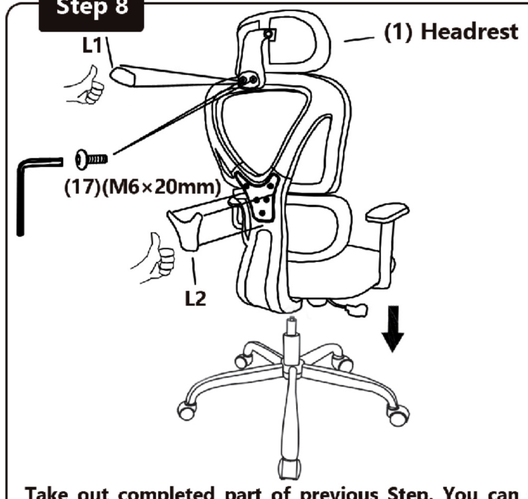

Take out completed part of previous Step. You can see there is a hole in the middle of Mechanism (7). Insert it into part of Step 2 as shown. At this time, you should use your whole strength to press the seat cushion hardly to make sure they combine with each other better.Then, align the headrest (1) with the screw holes on the top of the back (2), and tighten the M6*20MM (17) screws; finally, cover the screws with L1 and L2.

∗ Caution: If the Gas Lift (10) doesn't insert to Mechanism (7) firmly, it’ s likely to fall of when the chair raises up.