Compact Refrigerator

User Manual

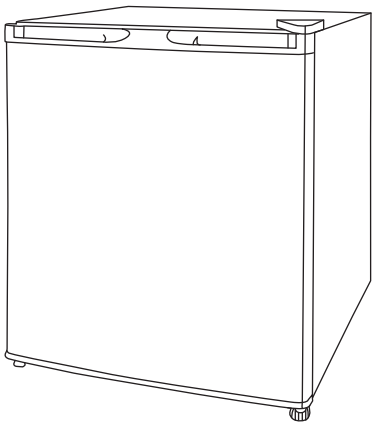

Model No.:BC-46-E

SAFETY PRECAUTIONS

Read all of the instructions before using this appliance. When using this appliance, always exercise basic safety precautions, including the following:

NOTE: If the refrigerator has been placed in a horizontal or tilted position for any period of time wait 24 hours before plugging the unit in.

1) Use this appliance only for its intended purpose as described in this use and care guide.

2) This refrigerator must be properly installed in accordance with the installation instructions before it is used. See grounding instructions in the installation section.

3) Never unplug your refrigerator by pulling on the power cord. Always grasp the plug firmly and pull straight out from the outlet.

4) Repair or replace immediately, all electric service cords that have become frayed or otherwise damaged. Do not use a cord that shows cracks or abrasion damage along its length, the plug or the connector end.

5) Unplug your refrigerator before cleaning or before making any repairs. **Note:** *If for any reason this product requires service, we strongly recommend that a certified technician performs the service.*

6) **DANGER** - Risk of Fire or Explosion. Flammable refrigerant used. Do not use Mechanical devices to defrost refrigerator. Do not puncture refrigerant tubing.

7) If your old refrigerator is not being used, we recommend that you remove the doors and leave the shelves in place. This will reduce the possibility of danger to children.

8) This refrigerator should not be recessed or built-in in an enclosed cabinet. It is designed for freestanding installation only.

9) Do not operate your refrigerator in the presence of explosive fumes.

SAVE THESE INSTRUCTIONS

PARTS AND FEATURES

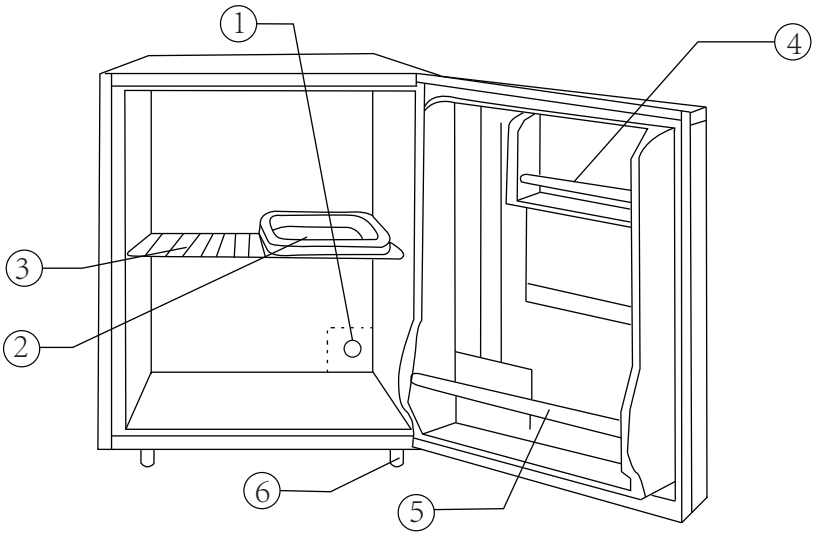

① Temperature Control Knob

② Drip Tray

③ Removable Shelf

④ Dairy Rack

⑤ Bottle Rack

⑥ Adjustable Legs

INSTALLING YOUR REFRIGERATOR

Unpacking Your Refrigerator

1. Remove all packaging material. This includes the foam base and all adhesive tape holding the refrigerator accessories inside and outside.
2. Inspect and remove any remains of packing, tape or printed materials before powering on the refrigerator.

Proper Air Circulation

- To ensure your refrigerator works at the maximum efficiency it was designed for, you should install it in a location where there is proper air circulation, plumbing and electrical connections.
- The following are recommended clearances around the refrigerator:
  Sides.....3/4" (19mm)
  Top.....2" (50mm)
  Back.....2" (50mm)

Electrical Requirement

- Make sure there is a suitable power outlet (115 volts, 15 amps outlet) with proper grounding to power the refrigerator.
- Avoid the use of three prong adapters or cutting off the third grounding prong in order to accommodate a two prong outlet. This is a dangerous practice since it provides no effective grounding for the refrigerator and may result in shock hazard.



DANGER – Risk Of Fire Or Explosion. Flammable Refrigerant Used. To Be Repaired Only By Trained Service Personnel. Do Not Puncture Refrigerant Tubing

CAUTION – Risk Of Fire Or Explosion. Flammable Refrigerant Used. Consult Repair Manual/Owner's Guide Before Attempting To Service This Product. All Safety Precautions Must be Followed

CAUTION – Risk Of Fire Or Explosion. Dispose Of Property In Accordance With Federal Or Local Regulations. Flammable Refrigerant Used

CAUTION – Risk Of Fire Or Explosion Due To Puncture Of Refrigerant Tubing; Follow Handling Instructions Carefully. Flammable Refrigerant Used

Use of Extension Cords

- Avoid the use of an extension cord because of potential safety hazards under certain conditions. If it is necessary to use an extension cord, use only a 3-wire extension cord that has a 3-blade grounding plug and a 3-slot outlet that will accept the plug. The marked rating of the extension cord must be equal to or greater than the electrical rating of the appliance.

Installation Limitations

- Do not install your refrigerator in any location not properly insulated or heated, e.g. garage, etc. Your refrigerator was not designed to operate in temperature settings below 55˚ Fahrenheit.
- Select a suitable location for the refrigerator on a hard even surface away from direct sunlight or heat source, e.g. radiators, baseboard heaters, cooking appliances, etc. Any floor unevenness should be corrected with the leveling legs located on the front bottom corners of the refrigerator.

Door Alignment (see fig. #1)

1. Remove the top hinge cover by using a flathead screwdriver. Place the head under the front edge of the cap and gently lift.
2. Loosen the top hinge screws using a Phillips head screw driver.
3. Adjust the door or put a spacer in between and tighten the screws.
4. Replace the top hinge cover by aligning the rear of the cover with the rear of the hinge. Press firmly on the front of the cover until it snaps in place.

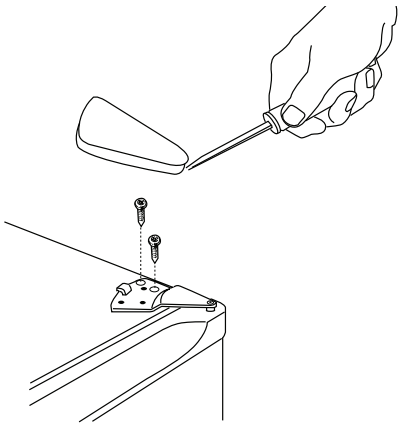

fig. 1

REFRIGERATOR FEATURES AND USE

General Features

Adjustable temperature dial:

Your refrigerator will automatically maintain the temperature level you select. The temperature control dial has 7 settings plus "0". 1 is the warmest. 7 is the coldest. At first, set the dial to 4 and allow 24 hours to pass before adjusting the temperature to your needs.

Note: If the refrigerator has been placed in a horizontal or tilted position for any period of time wait 24 hours before plugging the unit in.

Refrigerator Interior Shelves

To remove or replace a full-width slide-out shelf: (see fig. # 2)

1. Gently tilt the shelf up and slide forward until the shelf has been completely removed.
2. To replace the shelf, gently slide the shelf back.

fig. # 2

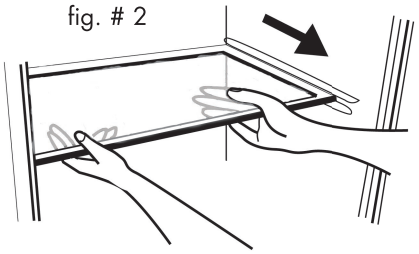

Defrosting Your Refrigerator

Heavy frost will effect the efficiency and performance of the refrigerator and can create increased energy consumption. If the frost inside of the freezer gets as thick as ¼ inch, you must defrost the refrigerator. Follow these steps to defrost the freezer:

1. Remove all food from the refrigerator and freezer.
2. Uninstall the drawers and shelves.
3. Unplug the power supply cord.
4. Open the doors and wait for the appliance to thaw completely.
5. Clean up the water with dry towels. Replace all parts, plug in and return thermostat dial to desired setting.

NOTE: DO NOT use any other equipment or method to force the defrost process. It may ruin the cooling system. DO NOT use sharp instruments to scrape off the ice/frost.

Normal Operating Sounds You May Hear

- Boiling water, gurgling sounds or slight vibrations that are the result of the refrigerant circulating through the cooling coils.
- The thermostat control will click when it cycles on and off.

PROPER REFRIGERATOR CARE AND CLEANING

Cleaning and Maintenance

Warning: To avoid electric shock, always unplug your refrigerator before cleaning. Ignoring this warning may result in death or injury.

Caution: Before using cleaning products, always read and follow manufacturer's instructions and warnings to avoid personal injury or product damage.

General: Prepare a cleaning solution of 3-4 tablespoons of baking soda mixed with warm water. Use sponge or soft cloth, dampened with the cleaning solution, to wipe down your refrigerator.

- Rinse with clean warm water and dry with a soft cloth.
- Do not use harsh chemicals, abrasives, ammonia, chlorine bleach, concentrated detergents, solvents or metal scouring pads. Some of these chemicals may dissolve, damage and/or discolor your refrigerator.

Door Gaskets: Clean door gaskets every three months according to general instructions. Gaskets must be kept clean and pliable to assure a proper seal.

- Petroleum jelly applied lightly on the hinge side of gaskets will keep the gasket pliable and ensure a good seal.

DANGER - Risk of Fire or Explosion due to puncture of refrigerant tubing. Flammable refrigerant used. Do not use metal instruments during cleaning process. Do not puncture refrigerant tubing.

Maintenance

Risk of Fire or Explosion. Flammable refrigerant used. Do not puncture refrigerant tubing. To be repaired only by trained authorized service personnel. Consult Repair Manual before attempting to service this product. All Safety Precautions Must be followed. Component parts shall be replaced with like components to minimize the risk of possible ignition due to incorrect parts or improper service.

Power Interruptions

- Occasionally there may be power interruptions due to thunderstorms or other causes. Remove the power cord from AC outlet when a power outage occurs. When power has been restored, replug power cord to AC outlet. If outage is for a prolonged period, inspect and discard spoiled or thawed food in refrigerator. Clean refrigerator before reusing.

Vacation and Moving Care

- For long vacations or absences, empty food from refrigerator, move the temperature dial to the "0" position and clean the refrigerator and door gaskets according to "General Cleaning" section. Prop doors open, so air can circulate inside.When moving, always move the refrigerator vertically. Do not move with the unit lying down. Possible damage to the sealed system could occur.

Energy Saving Tips

- The refrigerater should be located in the coolest area of the room, away from heat-producing appliances or heating ducts, and out of direct sunlight.
- Let hot foods cool to room temperature before placing in the refrigerator. Overloading the refrigerator forces the compressor to run longer and thus increases energy consumption. Foods that refrigerate too slowly may lose quality or spoil.
- Be sure to wrap foods properly, and wipe containers dry before placing in the refrigerator.
- The wire shelves should not be lined with aluminum foil, wax paper, or paper towels. Liners interfere with cold air circulation, making the refrigerator less efficient.
- Organize food to reduce door openings and extended searches. Remove as many items as needed at one time, and close the door as soon as possible.

TROUBLESHOOTING

Refrigerator does not operate:
- Check if thermostat control is not in the "OFF" position.
- Check if refrigerator is plugged in.
- Check if there is power at the AC outlet, by checking the circuit breaker.

Food temperature appears too warm:
- Frequent door openings.
- Allow time for recently added warm food to reach fresh food temperature.
- Check gaskets for proper seal.
- Adjust temperature control to colder setting.

Food temperature is too cold:
- If temperature control setting is too cold, adjust to a warmer setting and allow several hours for temperature to adjust.

Refrigerator runs too frequently:
- This may be normal to maintain constant temperature during high temperature and humid days.
- Doors may have been opened frequently or for an extended period of time.
- Check gasket for proper seal.
- Check to see if doors are completely closed.

Moisture build up on interior or exterior of the refrigerator:
- This is normal during high humidity periods.
- Prolonged or frequent door openings.
- Check door gaskets for proper seal.

Refrigerator has an odor:
- Interior needs cleaning.
- Foods improperly wrapped or sealed are giving off odors.

Refrigerator door does not shut properly:
- Level the refrigerator.
- Re-align refrigerator door.
- Check for blockages, e.g. food containers, crisper cover,shelves, bins, etc.

Popping or cracking sound when the compressor comes on:
- Check to ensure the refrigerator is level.
- The floor may be uneven or weak. The refrigerator rocks on the floor when it is moved slightly. Be sure the floor can adequately support the refrigerator. Level the refrigerator by putting wood or metal shims under part of the refrigerator.
- The refrigerator is touching the wall. re-level the refrigerator and move it from the wall. See the "Installing Your Refrigerator" section.