ASSEMBLY INSTRUCTION FOR
MODEL: MALIKA DINING TABLE

HARDWARE LIST				
A		Bolt	Ø8 x 35mm	12
B		Lock Washer	Ø9 x Ø13mm	12
C		Flat Washer	Ø8 x Ø20mm	12
D		Allen Key	4 x 110mm	1

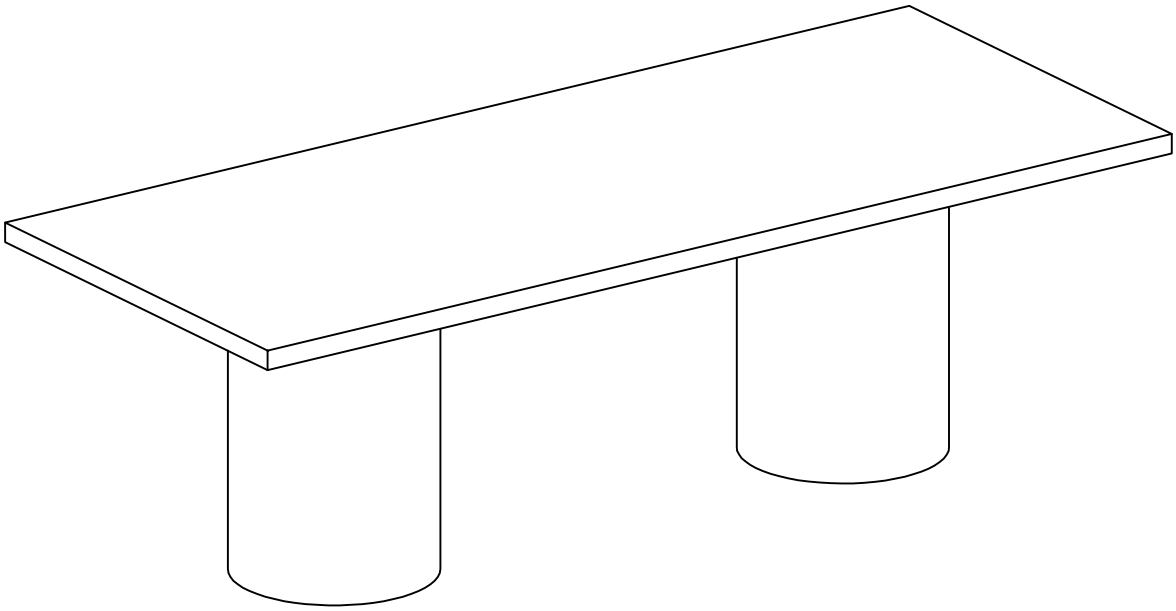

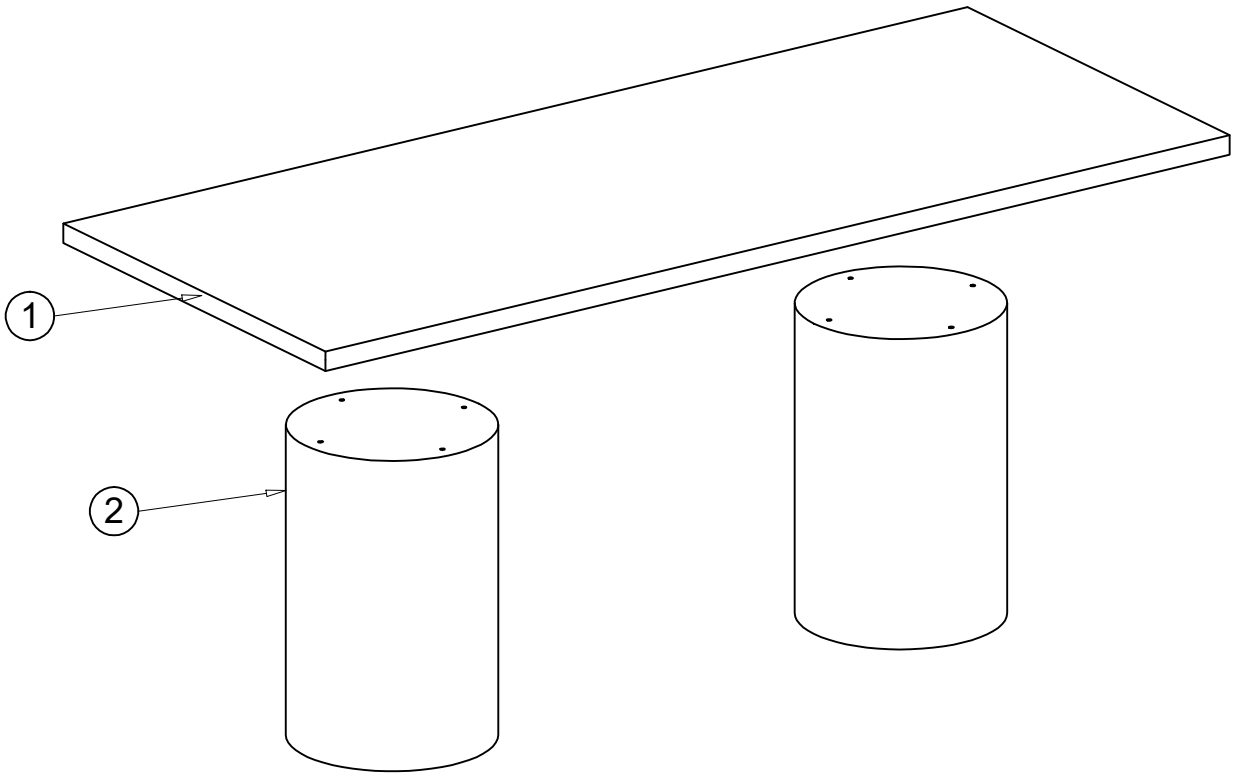

ASSEMBLY INSTRUCTION FOR
MODEL: MALIKA DINING TABLE

STEP 1

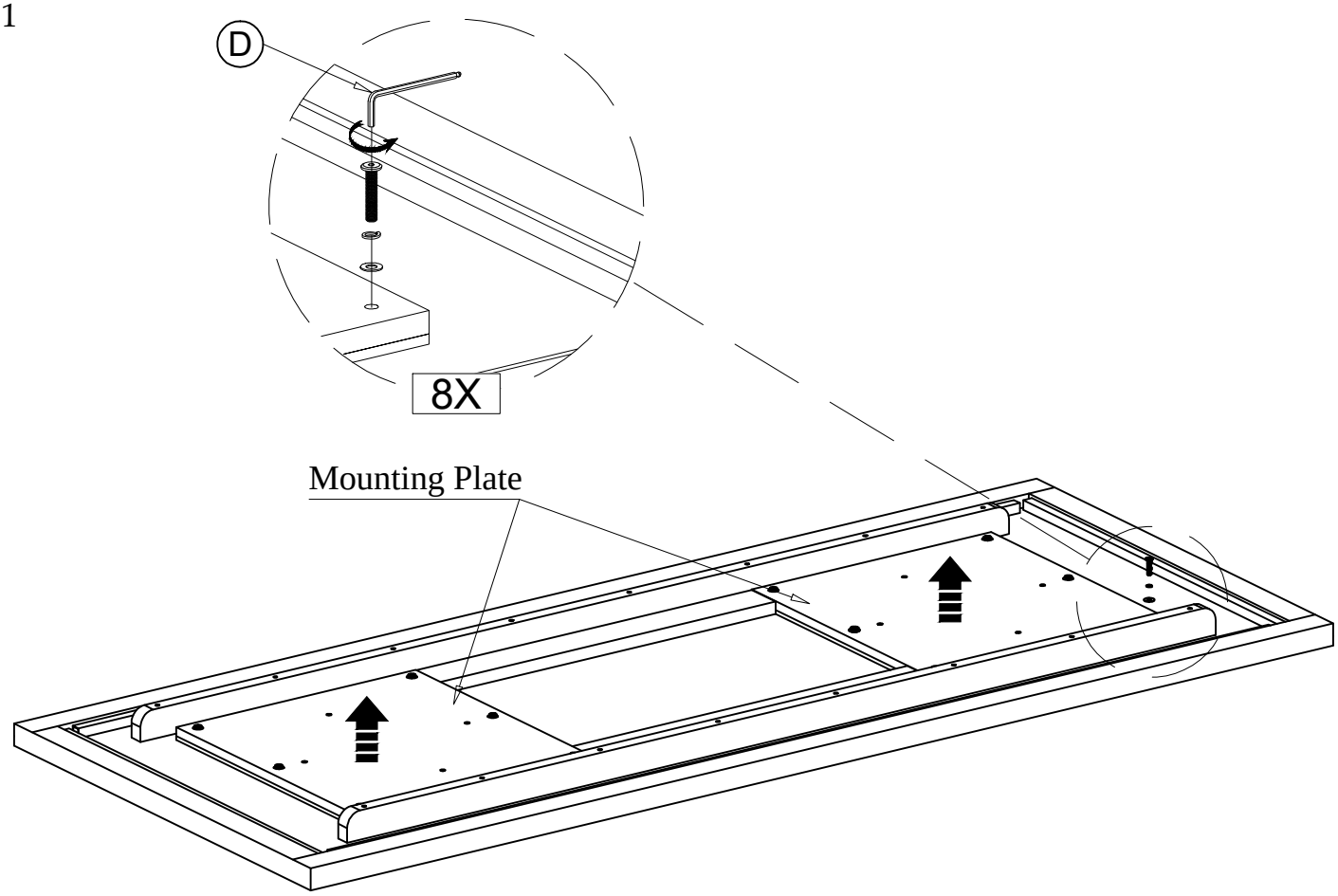

STEP 2

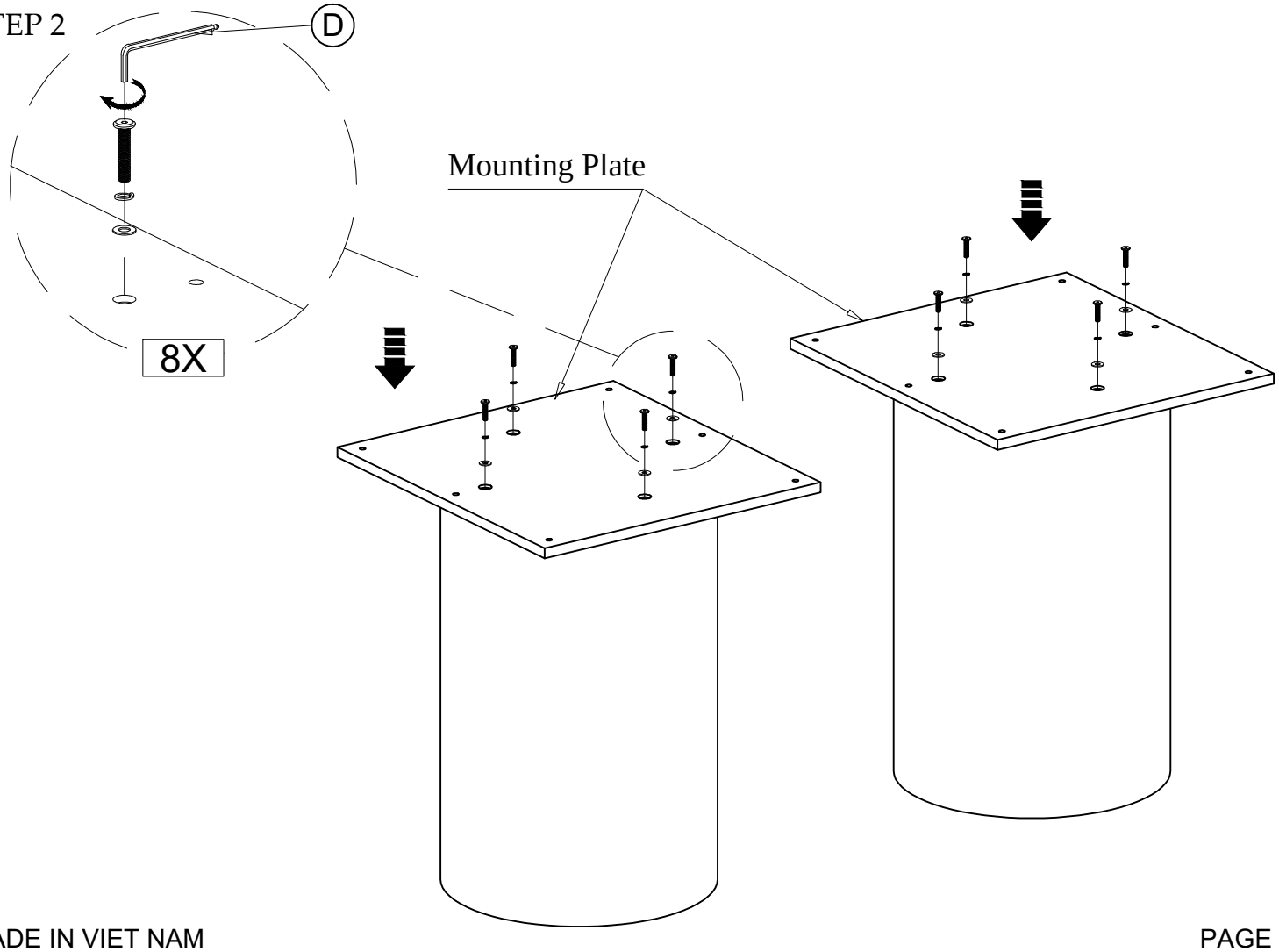

ASSEMBLY INSTRUCTION FOR
MODEL: MALIKA DINING TABLE

STEP 3

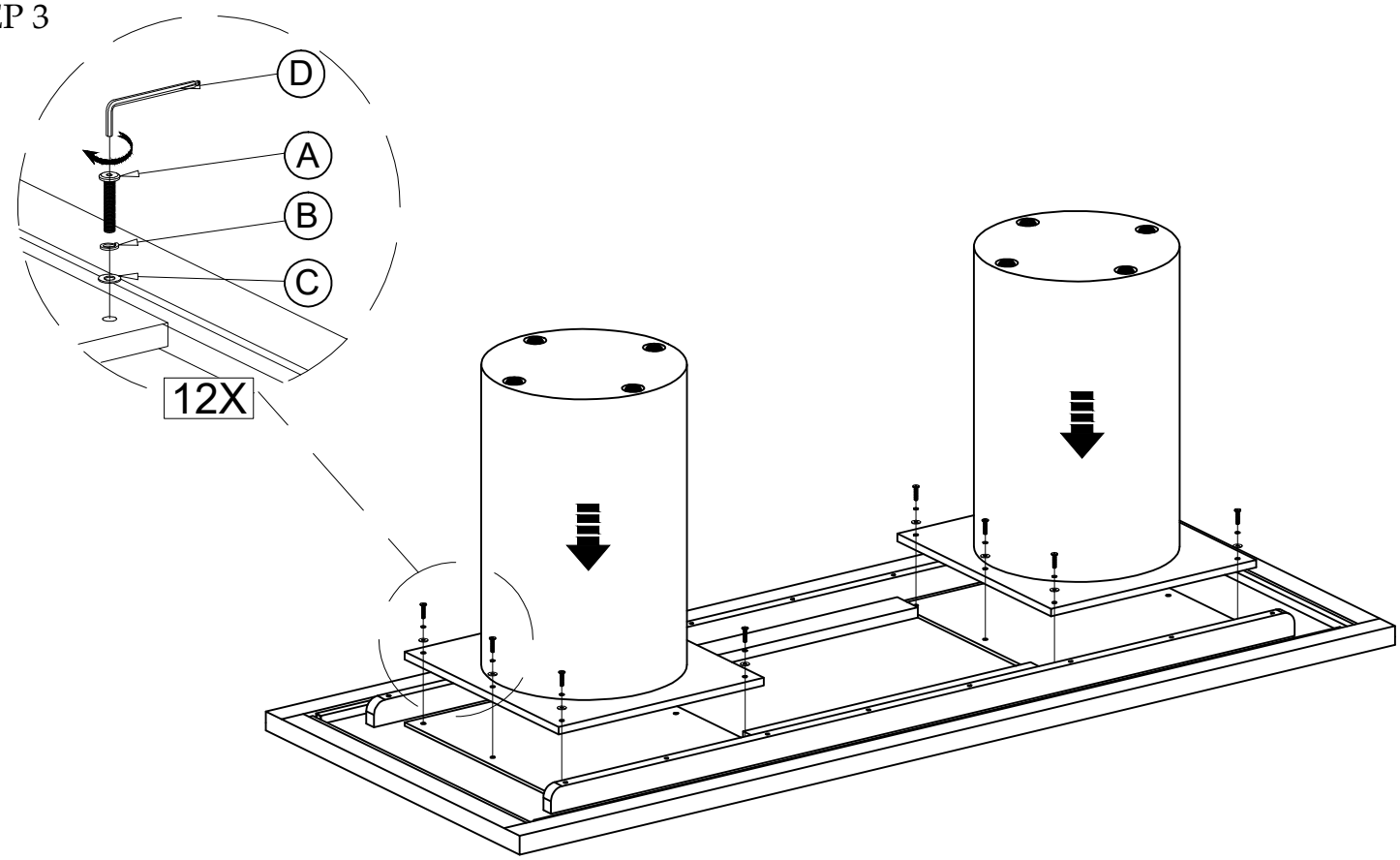

STEP 4

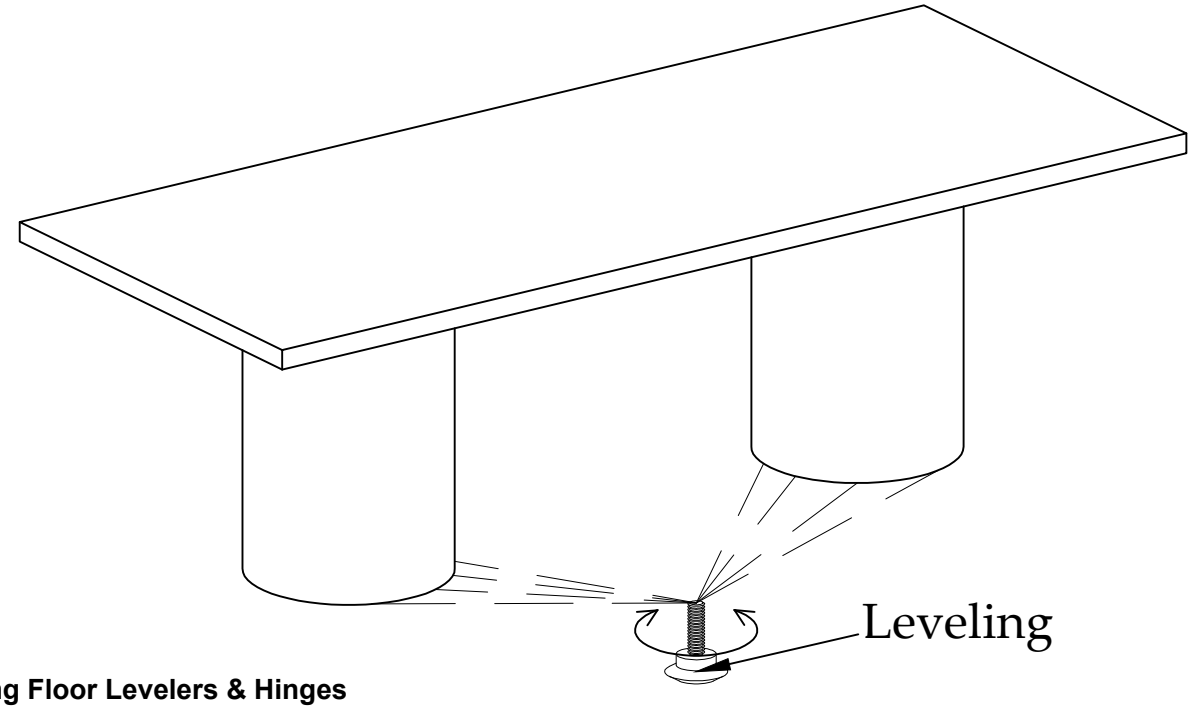

Adjusting Floor Levelers & Hinges

Your furniture has been expertly crafted and pre-adjusted by professionals. However, slight shifts can occur during transportation. If you notice that the doors are not perfectly aligned or the furniture wobbles, a quick adjustment can help ensure stability and a seamless look.

Adjust the Floor Levelers

Check for Stability - Place the furniture in its final position on a level surface. If it wobbles or doesn't sit evenly, the floor levelers need adjusting.

Locate the Levelers - These are small adjustable feet found at the bottom corners of your furniture.

Adjust as Needed - Using your hand or a wrench, turn the levelers clockwise to raise or counterclockwise to lower the furniture. Make small adjustments and check stability after each turn.