ASSEMBLY INSTRUCTIONS

1

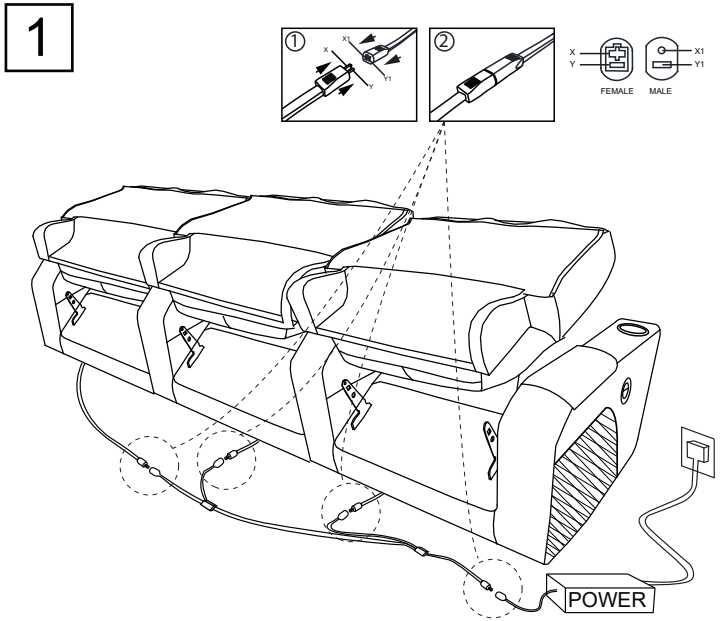

2

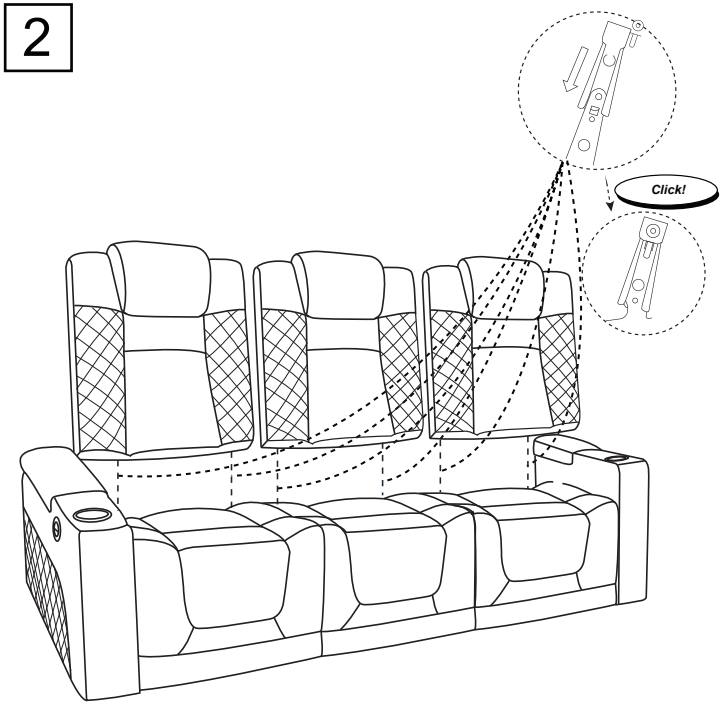

3

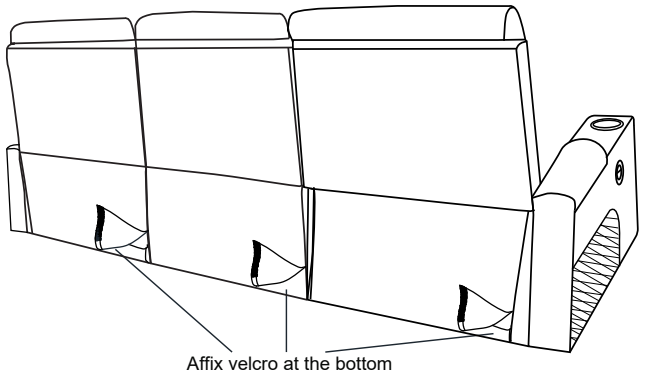

4

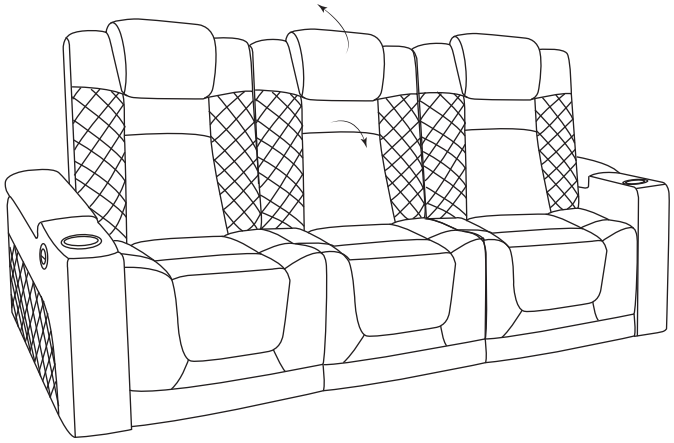

5

