ENJOY SMART LIFE

EPLO®

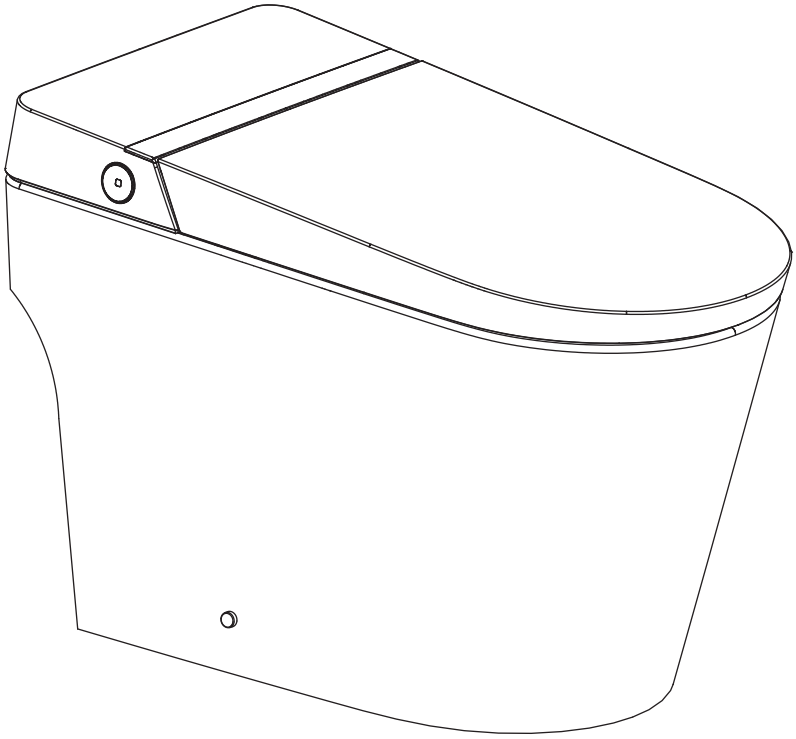

Installation Manual

■Model:G20/G27

Thank you for choosing our products. Please read the instructions carefully before installation and keep it available for future maintenance or reference.

E-mail:service@eplo.com

Content

Installation

Safety instructions 01
Technical specification 05
List of materials 07
Technical drawings 08
Parts identification 09
Toilet installation 10
Previous preparation 12
Auto lid open/close 13
Foot sensing 14

Maintenance

Daily maintenance 15
1. Main unit care and maintenance
2. Maintenance of filter net
3. Spray nozzle maintenance and care

Emergency troubleshooting 16
1. Electricity and water cut off
2. Failure of remote control
3. When the product is left unused for long time

Others

Description of the button function 17
Display LED description 18
Troubleshooting guide 19

IMPORTANT SAFEGUARDS

When using electrical products, especially when children are present, basic safety precautions should always be followed, including the following:

1. The appliance is not to be used by persons (including children) with reduced physical, sensory or mental capabilities, or lack of experience and knowledge, unless they have been given supervision or instruction.
2. This appliance can be used by children aged from 8 years and above and persons with reduced physical, sensory or mental capabilities or lack of experience and knowledge if they have been given supervision or instruction concerning use of the appliance in a safe way and understand the hazards involved.
3. Children shall not play with the appliance.
4. Cleaning and user maintenance shall not be made by children without supervision.

READ ALL INSTRUCTIONS BEFORE USING

DANGER – To reduce the risk of electrocution:

1. Do not use while bathing.
2. Do not place or store product where it can fall or be pulled into a tub or sink.
3. Do not place in or drop into water or other liquid.
4. Do not reach for a product that has fallen into water. Unplug immediately.
5. Do not wash the main unit or electrical plug with water or detergent.
6. Do not handle the electrical plug with wet hands.
7. Never block the outlet of the air dryer.
8. Never disassemble, repair or modify this product.
9. During installation, disassembly, repair and maintenance of the product, the power plug must be switched off and water supply be shut off.

DANGER – *Réduire le risque d'électrocution:*

1. Ne pas utiliser pendant le bain.
2. Ne pas placer ou stocker le produit dans un endroit où il pourrait tomber ou être tiré dans une baignoire ou un évier.
3. Ne pas placer ou laisser tomber le produit dans l'eau ou tout autre liquide.
4. Ne tendez pas la main pour obtenir le produit tombé dans l'eau. Débranchez immédiatement la prise.
5. Ne lavez pas l'unité principale ou les prises électriques avec de l'eau ou des détergents.
6. Ne pas manipuler la prise électrique avec les mains mouillées.
7. Ne jamais obstruer la sortie du sécheur d'air.
8. Ne jamais démonter, réparer ou modifier ce produit.
9. À l'occasion de l'installation, du démontage, de la réparation et de l'entretien du produit, la prise de courant doit être coupée et l'alimentation en eau doit être interrompue.

WARNING – To reduce the risk of burns, electrocution, fire, or injury to persons.

1. Close supervision is necessary when this product is used by, on, or near children or individuals with disabilities.
2. Use this product only for its intended use as described in this manual. Do not use attachments not recommended by the manufacturer.
3. Never operate this product if it has a damaged cord or plug, if it is not working properly, if it has been dropped or damaged, or dropped into water. Return the product to a service center for examination and repair.

4. Keep the cord away from heated surfaces.
5. Never use while sleeping or drowsy.
6. Never drop or insert any object into any opening or hose.
7. Do not use outdoors or operate where aerosol (spray) products are being used or where oxygen is being administered.
8. Connect this product to a properly grounded outlet only. See Grounding Instructions.
9. Do not throw cigarettes and other burning materials into toilet, otherwise it might cause fire.
10. This product is an electric appliance, so it must be placed far away from water and other liquid.
11. Do not lay the product on its side or upside down during the electrical circuit.
12. It is prohibited to use other electric appliances in the same socket.
13. It is forbidden to use the power extension or unstable loose outlet.
14. Do not reuse any existing water supply hoses, otherwise it might cause leakage, fire or electrical shock. Installation should include specified components and a new water supply hose.

⚠ ***AVERTISSEMENT –*** *Pour réduire les risques de brûlure, d'électrocution, d'incendie ou de blessure.*

1. Ce produit doit être surveillé de près lorsqu'il est utilisé par, sur ou à proximité d'enfants ou de personnes handicapées.
2. N'utilisez ce produit que pour l'usage auquel il est destiné, tel qu'il est décrit dans ce manuel. N'utilisez pas d'accessoires non recommandés par le fabricant.
3. N'utilisez jamais ce produit si le cordon ou la fiche est endommagé, ne fonctionne pas correctement, tombe ou est endommagé, ou tombe dans l'eau. Retourner le produit au centre de service pour inspection et réparation.
4. Gardez le cordon loin des surfaces chaudes.
5. Ne jamais utiliser pendant le sommeil ou la somnolence.
6. Ne laissez jamais tomber ou n'insérez jamais d'objet dans une ouverture ou un tuyau.
7. Ne pas utiliser à l'extérieur ou dans des endroits où des aérosols (sprays) ou de l'oxygène sont utilisés.
8. Connectez ce produit uniquement aux prises correctement mises à la terre. Voir les instructions de mise à la terre.
9. Ne jetez pas de cigarettes et autres substances brûlées dans les toilettes, sinon cela pourrait provoquer un incendie.
10. Ce produit est un appareil électrique et doit donc être placé loin de l'eau et d'autres liquides.
11. Dans le circuit, ne pas allonger le produit sur le côté ou à l'envers.
12. L'utilisation d'autres appareils électriques dans la même prise est interdite.
13. Il est interdit d'utiliser des rallonges d'alimentation ou des prises lâches instables.
14. Ne réutilisez pas les tuyaux d'alimentation existants, car ils pourraient provoquer une fuite, un incendie ou une électrocution. L'installation doit inclure les composants spécifiés et un nouveau tuyau d'alimentation en eau.

IMPORTANT SAFETY INSTRUCTIONS

CAUTION – Indicates that failure to follow the instruction may cause body injury or property damage.

1. Do not install or use the product in wet places as steam room etc.
2. It is recommended to use water-proof electrical outlet which should be installed in a place where is not easily to get wet.
3. This product should be used with 110V-120V, 60Hz electrical current only, load current is at least 15A. Power plug must be equipped with ground fault circuit interrupter or ground fault electrical leakage protector or similar high sensitive, rapid type leakage switch (Rated sensitive current under 6mA).
4. When it thunders, it is strongly recommended to pull out the power plug.
5. Do not stand on ceramic toilet.
6. Ceramic toilet must install floor fixing bolts.
7. Do not stand on product unit, seat and lid.
8. Do not lean against the seat lid when using the product, to avoid damage.
9. This product is equipped with a soft-closing seat lid. Do not push the toilet seat closed, or damage may occur.
10. Do not use any caustic chemicals or scrubbing brush to clean this product.
11. Exposure to direct sunlight is prohibited.
12. Only use tap water or potable water, otherwise it may cause chafing.
13. Do not connect water supply to heater outlet. Make sure inlet water temperature is between 3~35°C/37.4~95°F.
14. When the room temperature is under zero degree, please drain the water tank, to avoid freezing.
15. Raise room temperature to prevent the toilet from damage due to freezing.
16. When moving the product from cold or wet environment into normal room temperature, wait for 2 hours until the condensation water is fully volatilized. Doing so can prevent the product from electrical short-circuit.
17. When not using the product over three(3) days, drain the water out of the toilet and pull the electrical plug from the wall outlet.
18. Stop using the product and shut off the power when product malfunctions. Call for professional service.

ATTENTION – *Indique que le non-respect de l'instruction peut entraîner des blessures corporelles ou des dommages matériels.*

1. N'installez pas ou n'utilisez pas le produit dans un endroit humide, tel qu'une chambre à vapeur, etc.
2. Il est recommandé d'utiliser une prise de courant étanche, qui doit être installée dans un endroit où elle ne risque pas d'être mouillée.
3. Ce produit doit être utilisé avec un courant électrique de 110V-120V, 60Hz uniquement, le courant de charge étant d'au moins 15A. La fiche d'alimentation doit être munie d'un disjoncteur de défaut de mise à la terre ou d'un protecteur de fuite de défaut de mise à la terre ou d'un interrupteur de fuite de type rapide de haute sensibilité similaire (courant sensible nominal inférieur à 6 ma).
4. En cas de tonnerre, il est fortement recommandé de débrancher la prise électrique.
5. Ne vous tenez pas debout sur les toilettes en céramique.
6. Les toilettes en céramique doivent être équipées de boulons de fixation au sol.
7. Ne pas se tenir debout sur l'unité de produit, le siège et le couvercle.
8. Ne vous appuyez pas sur le couvercle du siège lorsque vous utilisez le produit, afin d'éviter de l'endommager.
9. Le produit est équipé d'un couvercle de siège à fermeture douce. Ne fermez pas le siège de toilette, il pourrait causer des dommages.
10. N'utilisez pas de produits chimiques agressifs ou de brosses pour nettoyer ce produit.

11. L'exposition directe au soleil est interdite.
12. Utilisez uniquement de l'eau du robinet ou de l'eau potable, sinon vous risquez de causer des éraflures.
13. Ne raccordez pas l'alimentation en eau à la sortie de l'appareil de chauffage. S'assurer que la température de l'eau d'entrée est comprise entre 3~35℃/37.4~95℉.
14. Lorsque la température ambiante est inférieure à zéro degré, veuillez vidanger le réservoir d'eau afin d'éviter le gel.
15. Augmentez la température de la pièce pour éviter que les toilettes ne soient endommagées par le givrage.
16. Lorsque le produit passe d'un environnement froid ou humide à une température ambiante normale, attendre 2 heures jusqu'à ce que l'eau de condensation soit entièrement volatilisée. Ce faisant, vous évitez les courts - circuits électriques du produit.
17. Lorsque le produit n'est pas utilisé pendant plus de trois (3) jours, videz l'eau des toilettes et débranchez la prise électrique de la prise murale.
18. Cessez d'utiliser le produit et éteignez l'alimentation lorsque le produit tombe en panne. Appel à un service professionnel.

GROUNDING INSTRUCTIONS

This product should be grounded. In the event of an electrical short circuit, grounding reduces the risk of electric shock by providing an escape wire for the electric current. This product is equipped with a cord having a grounding wire with a grounding plug. The plug must be plugged into an outlet that is properly installed and grounded.

⚠ **DANGER –** Improper use of the grounding plug can result in a risk of electric shock.

If repair or replacement of the cord or plug is necessary, do not connect the grounding wire to either flat blade terminal. The wire with insulation having an outer surface that is green with or without yellow stripes is the grounding wire.
This product is factory equipped with a specific electric cord and plug to permit connection to a proper electric circuit. Make sure that the product is connected to an outlet having the same configuration as the plug. No adapter should be used with this product. Do not modify the plug provided — if it will not fit the outlet, have the proper outlet installed by a qualified electrician. If the product must be reconnected for use on a different type of electric circuit, the reconnection should be made by qualified service personnel.

⚠ ***DANGER -*** *une mauvaise utilisation de la prise de terre peut entraîner un risque d'électrocution.*

Si vous avez besoin de réparer ou de remplacer un fil ou une fiche, ne connectez pas le câble de mise à la terre à une borne de type lame plate. Les fils avec une couche isolante dont la surface extérieure est verte et avec ou sans bandes jaunes sont des fils de terre.
Ce produit est équipé en usine d'un cordon électrique et d'une fiche spécifiques permettant de le connecter à un circuit électrique approprié. Assurez-vous que le produit est branché sur une prise ayant la même configuration que la fiche. Aucun adaptateur ne doit être utilisé pour ce produit. Ne modifiez pas la fiche fournie — si elle n'est pas adaptée à la prise, faites installer la prise adéquate par un électricien qualifié. Si le produit doit être reconnecté pour être utilisé sur un autre type de circuit, il doit être reconnecté par un personnel de service qualifié.

SAVE THESE INSTRUCTIONS

Technical specification

Model		EP-G20
Main Unit	Rated voltage	110V-120V, 60Hz
	Rated power	865W
	Overall unit Waterproof	IPX4
	Electrical wire	Length is about 2.2m
Toilet	Flush volume	1.6/1.1Gpf（full flush6.0L/half flush4.1L）
	Flushing mode	Siphonic jet
	Rough-in distance	305mm
	Outlet outside diameter	≤100mm
	Drainage method	Down-drain
	Water pressure range	0.09MPa (dynamic water pressure, flow rate 3.96Gal/min (15.0L/min) or more)--0.8MPa (static water pressure)
Cleaning device	Heating mode	Instant heated
	Heating power	120V/1400W
	Water temperature	6 different level adjustment
	Water volume	3 different level adjustment
	Cleansing mode	Rear washing / Moving washing, Front washing / Moving washing
	Spray cleansing location	5 different level adjustment
	Water pressure protector	Pressure stabilizer, Automatic pressure discharging
	Anti-fouling device	Automatic cleansing nozzle, Anti-syphon device, Anti-backflow device, Filter device
	Safety device	Thermal fuse, Water temperature senor, Over temperature protection, Ground protection, Thermostat, Leakage protection plug
Drying device	Warm air volume	Over 0.2m^3/min
	Warm wind temperature	6 different level adjustment
	Heating power	250W
	Safety device	Thermal fuse, Temperature senor, Thermostat

Model		EP-G20
Deodorization	Deodorization Method	Lightless catalyst
Heated seat	Surface temperature	6 different level adjustment
	Heating power	50W
	Heated burning protection	The seat temperature will automatically lower to level 1 in 10 minutes after using
	Safety device	Sensed area, Temperature senor, Thermal fuse, Over temperature protection, Leakage protection plug
Caring device	Night light assembly	Intelligent, Normally-off, Normally-on
	User ID setting	To avoid disturbance from remote controls by multi-user
	Automatic flushing	Toilet will automatically flush as user walks away from bowl
	Foot-sensing flushing function	Enables foot-sensing flushing function
	Lid open function	Lid auto-open
Antibacterial position		Seat, Spray nozzle

Rated power: Under the condition of ambient temperature 23°C/73°F, water static pressure 0.18MPa±0.02MPa, water temperature 15°C/59°F, power toilet on, set water pressure, seat temperature, water temperature to the highest level in turn and perform one rear washing cycle.

List of materials

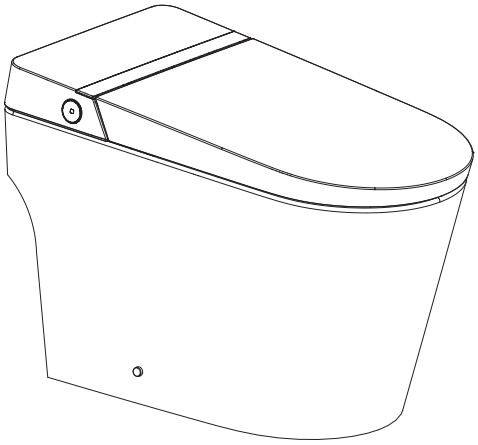

Main Unit



Remote controller components



Sealing Flange



Installation Cardboard



Installation Manual



Braided hose
(Installed)

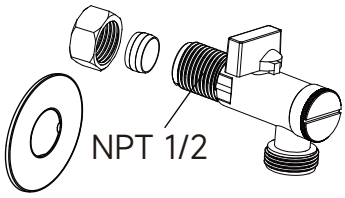

Angle Valve option 1

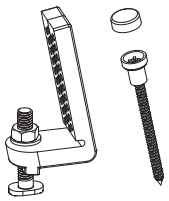

Mounting accessory kit

Technical drawing

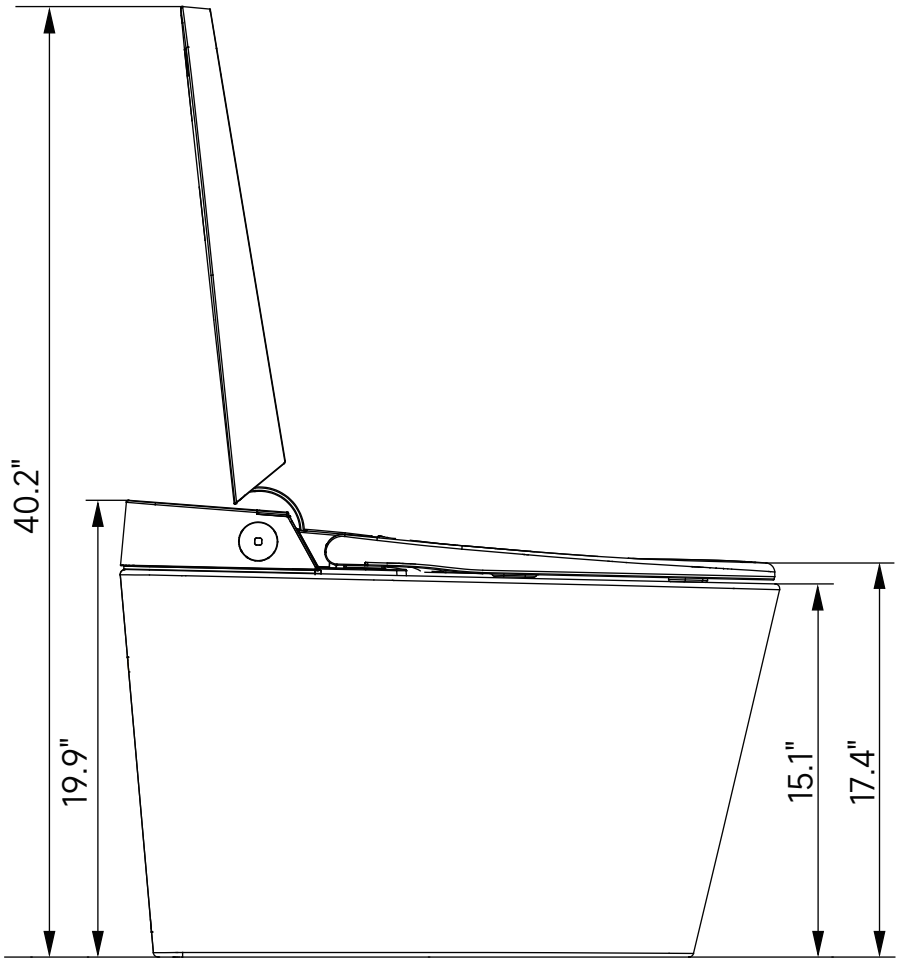

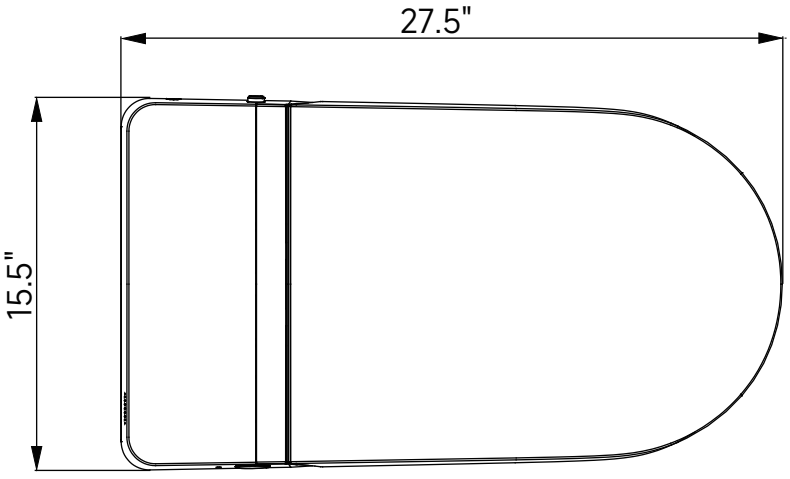

1. The product drawing is for reference only, and we reserve the right to modify the appearance of the product.
2. If the appearance of the product is changed, the actual product shall prevail.

Parts identification

Left side

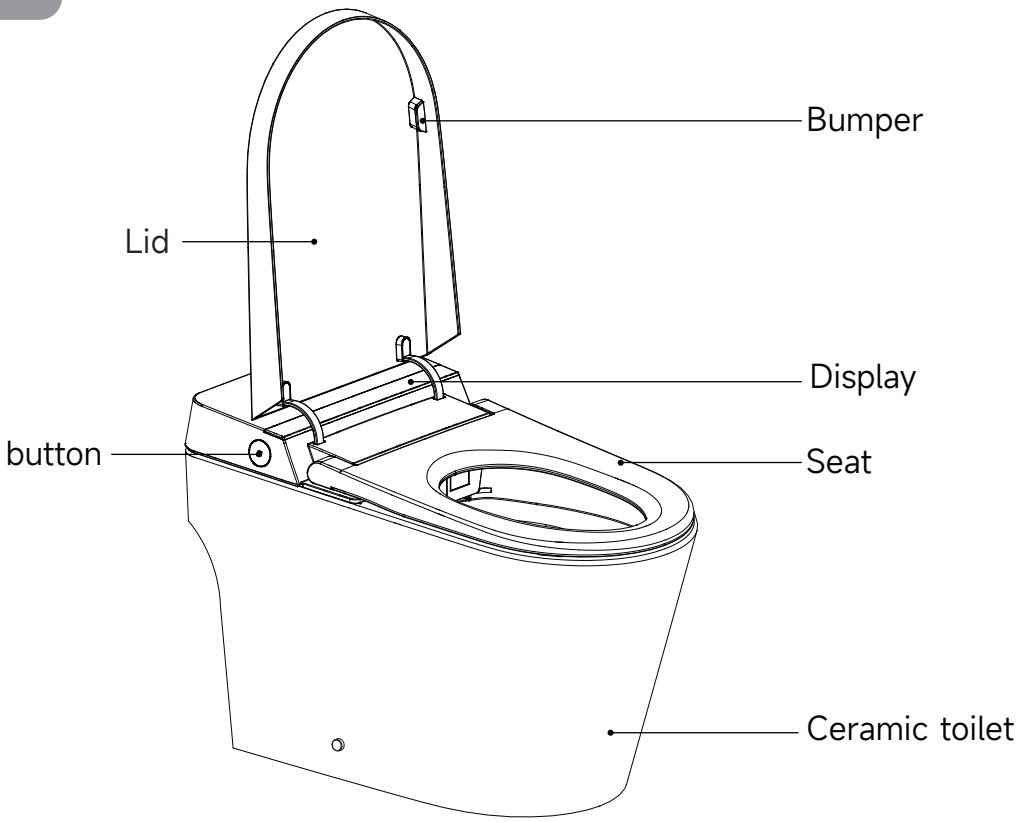

Right side

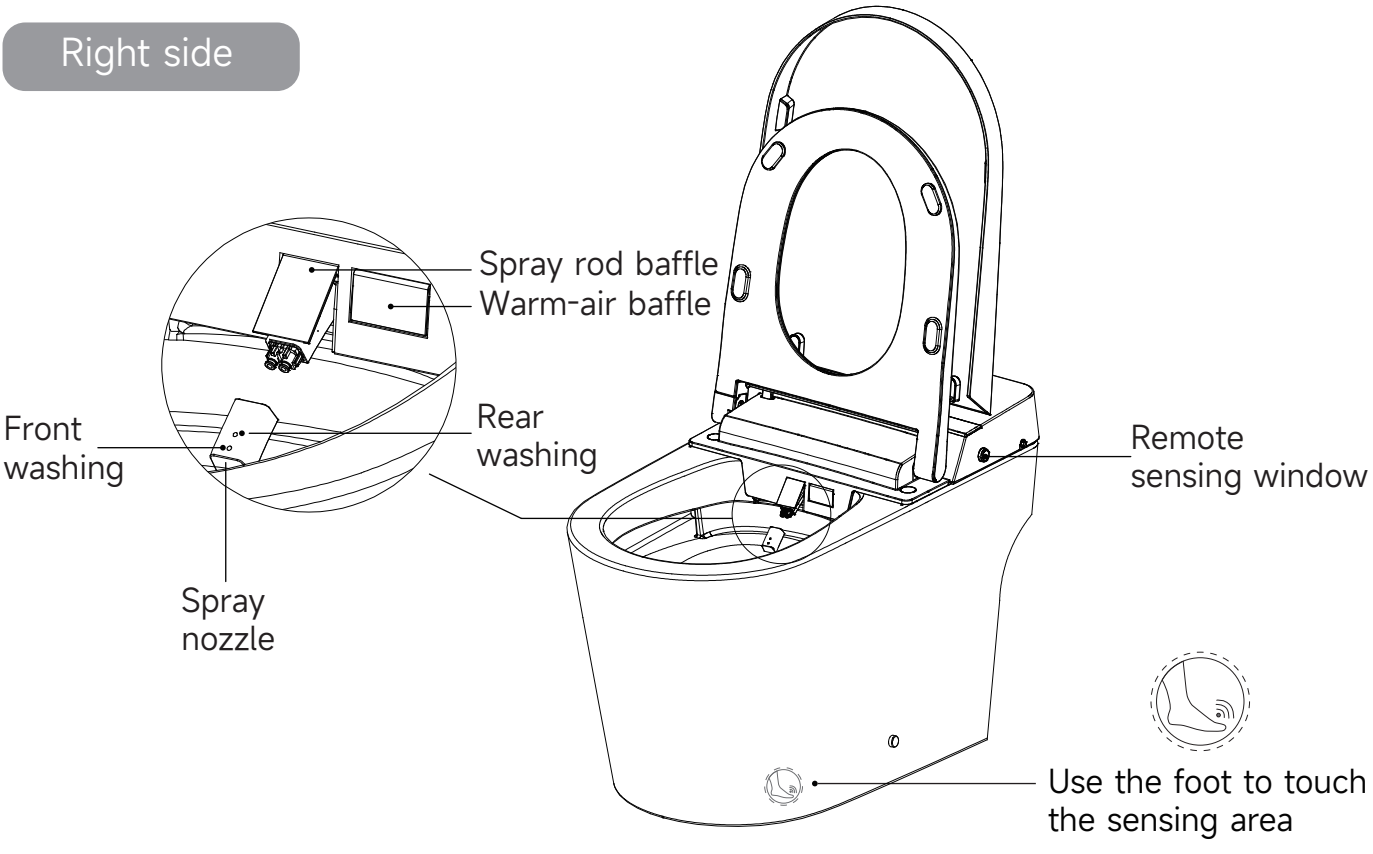

Toilet installation

⚠Precaution before installing

- Minimum dynamic working water pressure: 0.09MPa or more (3.96Gal/min(15L/min) or more), failure to meet this pressure will not achieve the best flushing effect.

  Remark: Apply the methods below if you don't have water pressure testing device.

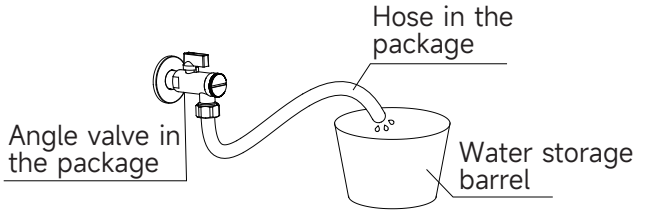

Open the angle valve and connect water inlet for 10s, once the water volume is above 0.66Gal (2.5L), the minimum water pressure of the product is ensured.

1. Installation of mating angle valve

- Draw drain outlet centerline on the floor, Install angle valve at proper position on wall according to dimension of toilet.

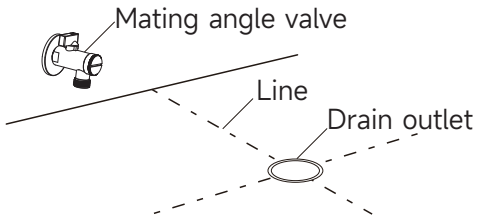

Note:
1. Please use the supplied angle valve when installing this toilet. Use of another angle valve not including a filter may result in blockages in the toilet and bidet waterways.
2. If replacing an existing angle valve, please contact a professional for installation.

Installation Method 1:

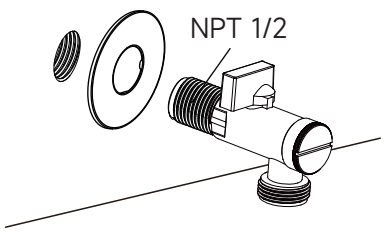

Installation Method 2:

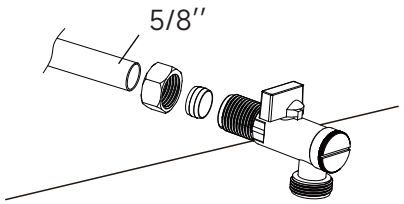

2. Cardboard installation

- Align cardboard with the centerline of drain outlet;
- Draw contour line according to cardboard;

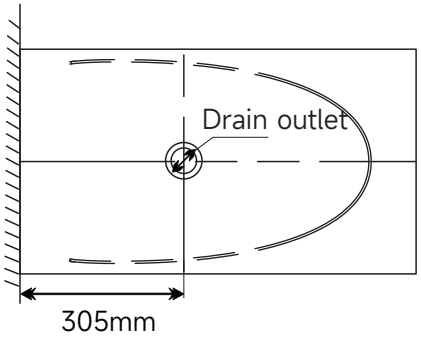

3. Hose

- Connect the water inlet and angle valve of the toilet with the matching hose and tighten it.

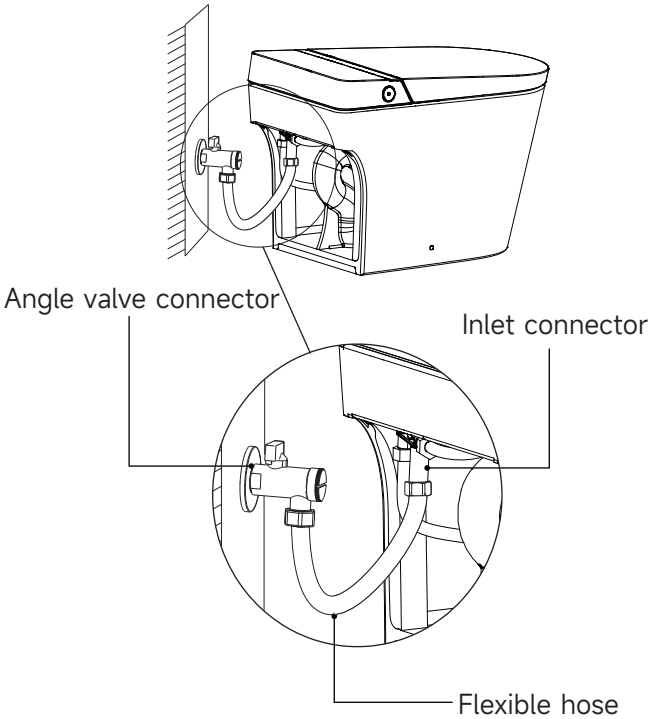

Note:
Please use this supplied water supply hose, to ensure optimal flushing performance.

4. Mounting bracket installation

- Assemble the mounting bracket with bolts and then secure them to the pre-installed flange on the ground and tighten with nuts.

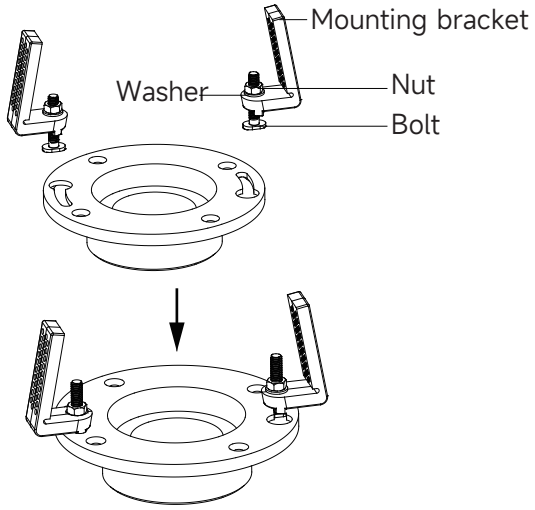

5. Ceramic toilet installation

- Install sealing flange on drain outlet;
- Install ceramic toilet on corresponding position according to contour line.

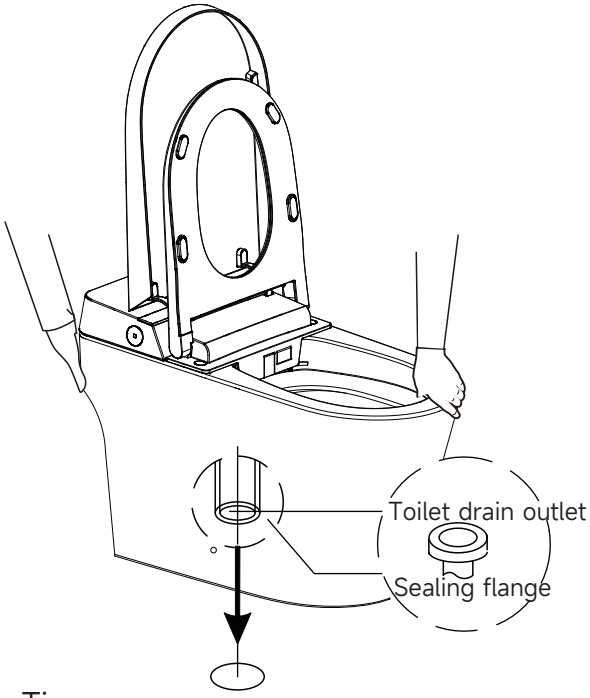

Tips:

1. The toilet is heavy, a it needs to open the seat cover and carry by 2 adults.
2. Clean drain outlet before installation.
3. Make sure ceramic toilet outlet sits perfectly on drain outlet.

6. Screw installation

- Put the screw through the fixing sleeve and then install it through the holes (on both sides of the toilet ceramic) to the mounting bracket on the ground, and lock tight with a tool.
- Put the decorative cap on the fixing sleeve.

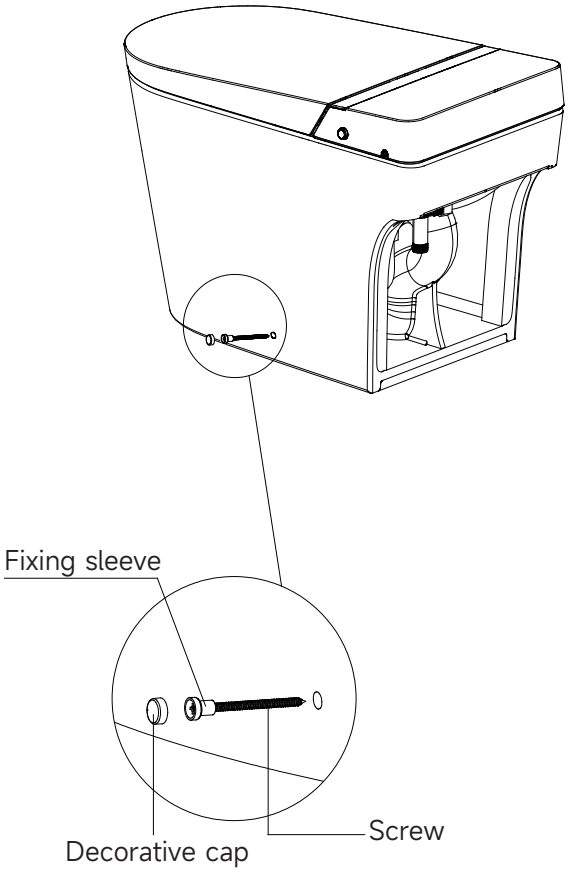

Previous preparation

1. Turn on the angle valve

- Check thread connection, make sure no leakage is found, unscrew angle valve anticlockwise to maximum opening.
  (Tips: When opening for the first time, the angle valve handle has a larger torque)

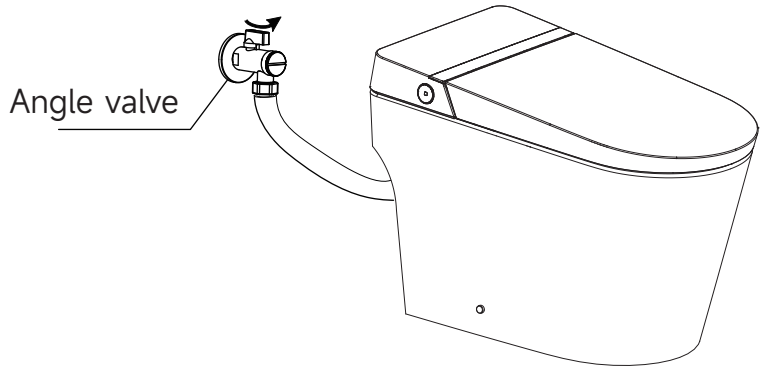

2. Power Connection

- Insert power line leakage protection plug into the power socket, press the reset switch, plug indicator lights on indicating that the power is on.

Tips:

Press electric leakage test button prior to usage, the reset switch pops up indicating that the leakage protection function is normal.

Press the TEST button (then RESET button) every month to assure proper operation.

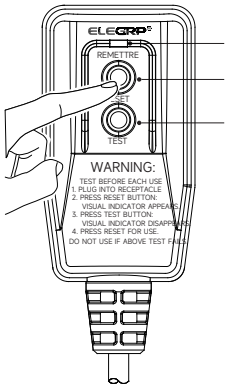

Indicator light

Reset switch

Electric leakage test button

* Only for models with leakage protection plug.
* Please refer to the actual product.

3. Safety self-inspection

1. When the host buzzer beeps, the button lights up white, and all the indicator icons on the display light up to start the self-inspection;
2. The host buzzer will beep again. After the self-inspection, the button will light up white, and the indicator lights of intelligent night light, water temperature and ECO icon will be off. And seat temperature icon will be on.
3. Turn on the function and use it normally.

Auto lid open/close

The intelligent toilet can achieve the function of auto lid open/close. on closed situation, so please function the auto lid open/close function by using remote controler.

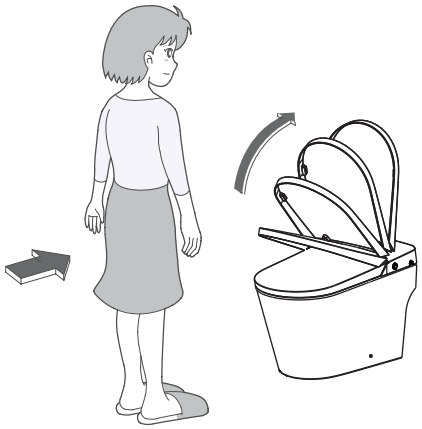

1. Approaching the toilet

When approaching the toilet, the mechanism will detect the movement and the lid will open automatically.

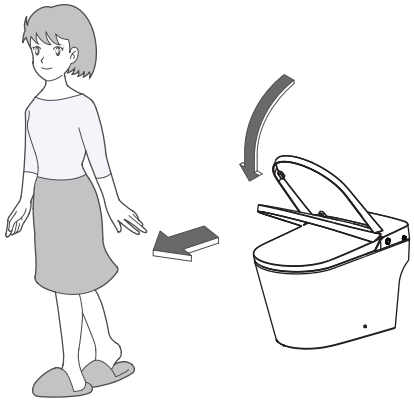

2. Leaving the toilet

After about 180 seconds when leaving the toilet, the lid will close automatically.

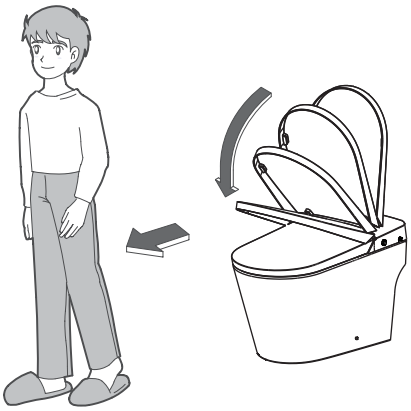

3. Men urinate when standing

1. Use the remote control to open the seat or do it manually.
2. After using and leaving the toilet, the toilet lid and seat will automatically close after 180 seconds.

Foot sensing

The toilet is equipped with foot sensor lid-open function, it can make lid auto-open by sensing foot movement.

1. When the lid and seat are both closed, put the foot within the sensing area and then lid opens automatically.

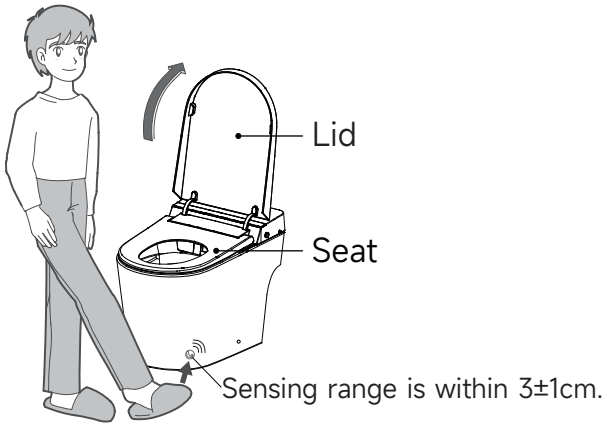

2. When the lid is open and seat closed, put the foot within the sensing area and then seat opens automatically.

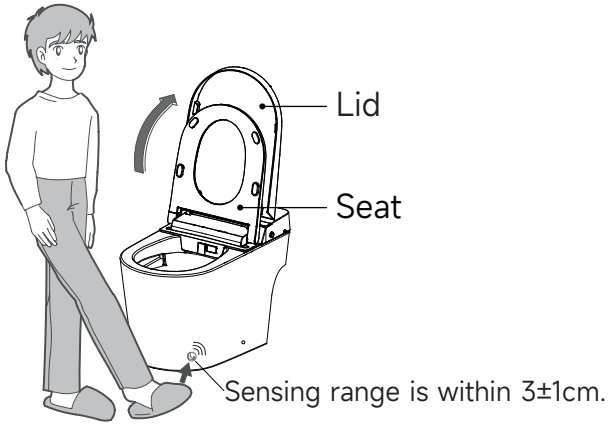

3. When the seat and lid are open, touch the sensing area with feet, close the seat and lid and then make the half flushing.

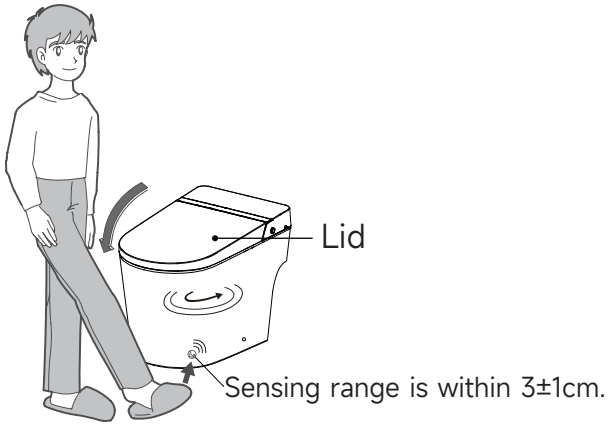

Daily maintenance

Main unit care and maintenance

1. Shut off power supply before doing maintenance.
2. Wipe the stain with a soft damp cloth.

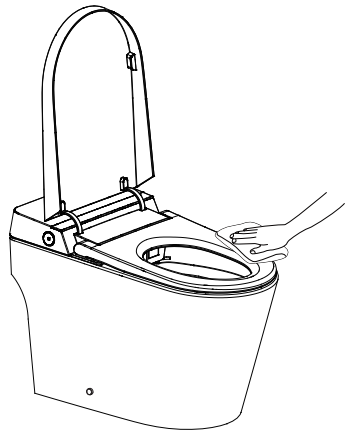

3. Safety self-inspection
   - After cleaning, re-connect the toilet with the power supply.

Maintenance of filter net

Time for maintenance: It is under normal water pressure but poor flush performance occurs.

1. Turn off power and the angle valve
2. Unscrew angle valve nut
3. Remove filter net

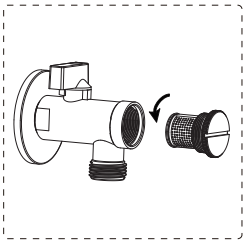

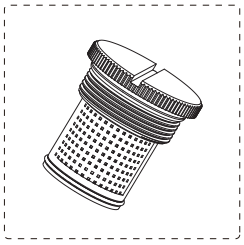

4. Use the brush to clean filter net
5. Reinstall filter net and angle valve nut
6. Turn on the angle valve and connect power, then it can work normally after self inspection.

Spray nozzle maintenance and care

1. Nozzle self-cleaning
   - While not sitting on the unit, short press the “REAR/MOVE” Button on the main unit, the spray nozzle will extend outward and water will flow out.
2. Spray nozzle disassemble
   - When the nozzle moves forward, the nozzle can be disassembled to clean.

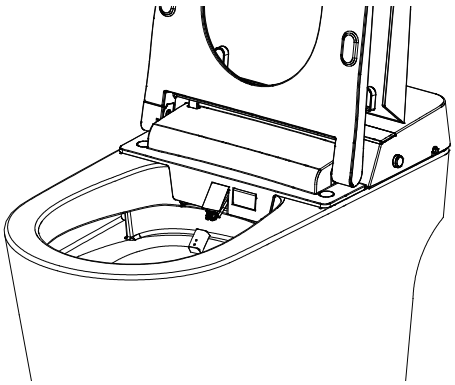

3. Use soft cloth or soft brush to clean
   - Do not pull or push the rod, to avoid damage.



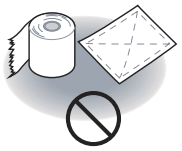

4. Nozzle retraction
   - Put the nozzle back to the front of the boom and press the “Stop” button to automatically retract the nozzle.

Emergency troubleshooting

Electricity and water cut off

- Put around 2.1Gal (8L) water into a barrel and flush the bowl of ceramic.

Note: Avoid water spilling from bowl.

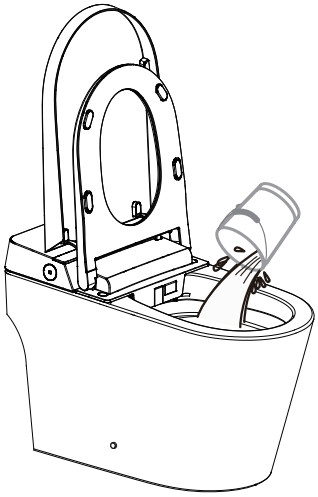

Failure of remote control

1. Operate through the toilet body button

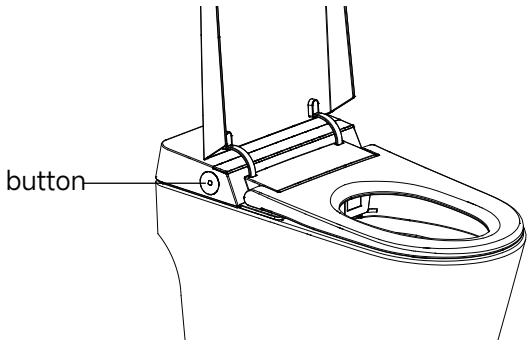

2. Battery replacement method

- Remove the remote control from rack
- Open the battery cover and replace the battery.
- Put the remote control back on the rack

Tips:
when the battery is replaced, the setting of automatic function and power saving device will be cancelled and need to be reset.

When the product is left unused for long time

Especially in winter when no one at home for a long time, please drain out the water inside tank and pipe to prevent freezing.

To discharge water

1. Drain out the water inside tank
   - Activate flushing, and then turn off angle valve to prevent water inlet.
2. Unplug and cut off the electricity
3. Drain out the water inside pipe
   - Unscrew the hose connector off angle valve, drain the water in the pipe and reinstall.

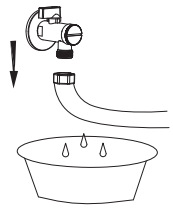

4. Handle the remaining water in bowl
   - It is suggested to put some antifreeze into water inside the bowl.

Tips: Make sure to turn on water supply and power when you use the toilet again.

Note: Before water discharging, the power must be cut off!

Description of the button function



Stop	1. Press and hold the “Stop” button on the unit, the unit enters the shutdown mode (white light off), press the “Stop” button again, the unit returns to the working mode (White light normally on).[In the shutdown mode, except for the “Stop” button on the main unit, any button (including the unit and the remote control) is invalid]. 2. When the user is seated, press the “Stop” button on the main unit to stop the feminine washing, rear washing or drying function. When the user is not seated, press the “Stop” button on the main unit repeatedly. The main unit switches over between working mode (White light normally on) and power save mode (white light flash).
Rear washing/ Moving washing	1. When people is seated, press "Rear washing" button, to wash the rear portion of body; Press "Rear washing" button repeatedly, then turn on/off mobile function; Press "Stop" button to stop. When one circle cleaning is finished and the body remains seated, the dry function will be automatically turn on and will stop after one cycle. 2. When no one is seated, press "Rear washing" button, the rod will stretch out, people can wash the nozzle and rod manually, press "Stop" button, the rod will retracts.
Front washing/ Moving washing	When people is seated, press "Front washing" button, to wash the front portion of body; Press "Front washing" button repeatedly, then turn on/off mobile function; Press "Stop" button to stop. When one circle cleaning is finished and the body remains seated, the dry function will be automatically turn on and will stop after one cycle.
Flush	1. When the user is seated, long press the “Flush” button on the main unit to turn on the drying function. After drying for one cycle, it will stop automatically. During the drying process, press the “Stop” button to stop the drying function. 2. In the non-off mode, short press the “Flush” button on the main unit to turn on the flush function. [Under the rear wash or the femail wash function, the flush function is invalid; when the nozzle is manually cleaned, the flush function is activated after the nozzle is fully extended and retracted into position].

Tips:
The default setting of all function is on middle level, after using controller, shift to the level setted last time.

Display LED description

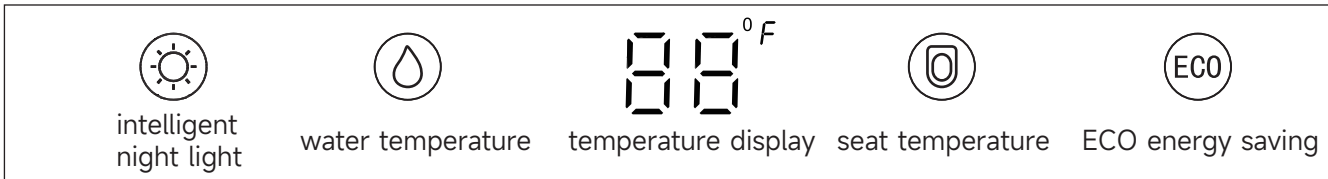

intelligent night light | water temperature | temperature display | seat temperature | ECO energy saving

Description of display LED light:

1. During the power on self-test stage, the icons of intelligent night light, water temperature, seat temperature and ECO are all on, and the temperature is displayed at 88 °F. After the self-test, the icons of intelligent night light, water temperature and ECO go out, and the seat temperature icon lights up to display the seat temperature of the current grade and the neutral position displays "--".
2. When the device is in non power saving state, the seat temperature icon lights up to display the current seat temperature in default and the neutral position displays "--". When adjusting the water temperature, the seat temperature icon goes out, the water temperature icon lights up to display the water temperature of the current grade, and the neutral position displays "--". The water temperature icon goes out after 10s to restore the seat temperature display.
3. In the process of cleaning, the seat temperature icon goes out and the water temperature icon lights up to display the water temperature of the current grade, and the neutral position displays "--".
4. When the intelligent night light function is on, the icon will be on otherwise it will be off.
5. In the power saving state, the ECO icon is on, neutral grade of the seat temperature shows neutral, and the non neutral shows first grade.
6. When the power is off, all the screen displays are off.
7. When the toilet is not in use, all the screen displays will go out after 30 seconds. When someone is sitting or operating any key of the product, the screen will return to the current state of the display device.
8. When it detects person approaching, if the screen is in the off state, the current state of the display device will be restored. When it detects person leaving, all the screen displays will be off after 30 seconds (only applicable to the toilet with sensor cover auto-open function).

Troubleshooting guide

Problem	Cause	Solution
No flushing	Water supply hose buckling causes block	Solve the buckling
	Angle Valve is off	Turn on the angle Valve
	Water supply is cut off	Connect water supply and wait for the water
Poor flushing	Water supply hose buckling causes partial block	Solve the buckling
	Angle Valve is not fully turned on	Turn on the angle Valve fully
	Filter is dirty and causes block	Clean the filter
Low water temperature	The water temperature is setted on normal temperature level	Reset the water temperature
Low seat temperature	The seat temperature is setted on normal temperature level	Reset the seat temperature
	In standby mode or power save mode	Switch to functional mode and use it after 3 minutes of use
Low wind temperature	The wind temperature is setted on normal temperature level	Reset the wind temperature
No wind out	In standby mode	Shift to function mode to use dry function
Spray rod cannot retracted	Power off	Push back the rod lightly and wait for the power
	Get stuck by impurities	Clear away the impurities
Spray rod cannot stretch out	Power off	Push back the rod lightly and wait for the power
	Do not sit in sensing area	Sit right in the sensing area
Remote control cannot display	Reverse the polarity of battery	Reload the battery
Malfunction of deodorization	User doesn't reach the sensing area in seat	Adjust to reach the sensing area
	Deodorization function keeps working after user leaves	It's a normal phenomenon if deodorization function keeps working after user leaves to ensure eliminating smell entirely
⚠ Caution	If the problems cannot be solved as per above methods, please shut-off the power, and contact service providers for maintenance.	
	If the leakage circuit breacker often trips off, it means the products has electricity leakage, so please shut-off the power, and contact service provider for maintenance.	

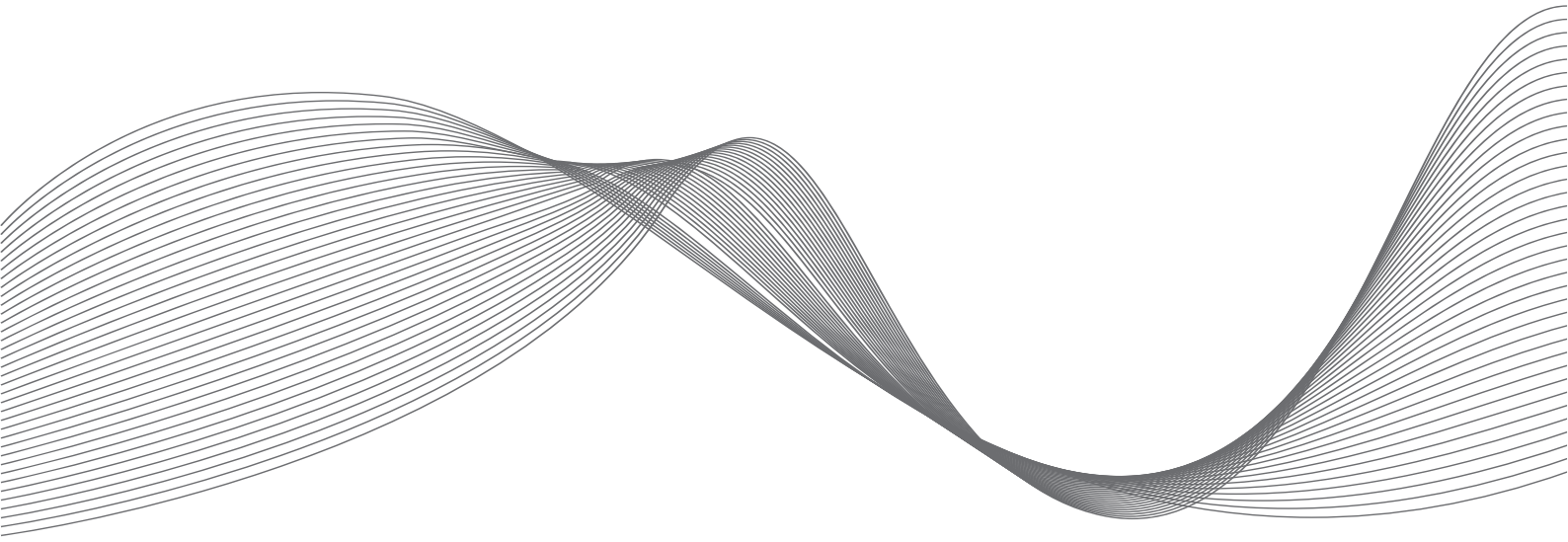

The picture of product may not entirely consistent with actual appearance and color because of products improvement, please in kind prevail.