3 years warranty

LED Chandelier
Lights

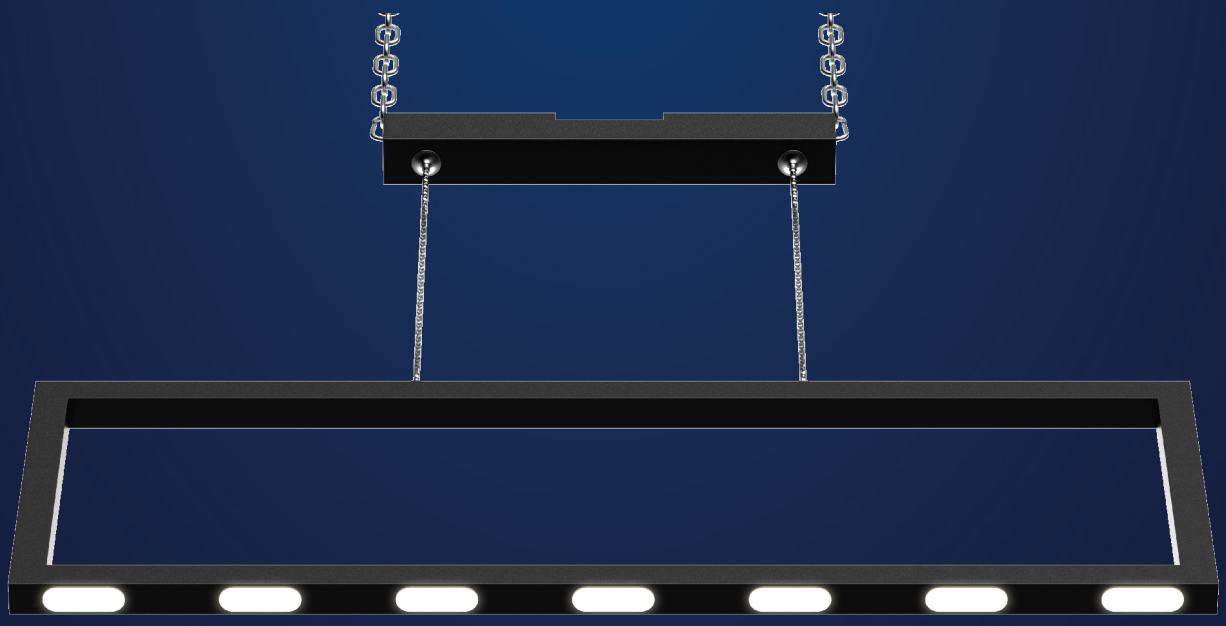

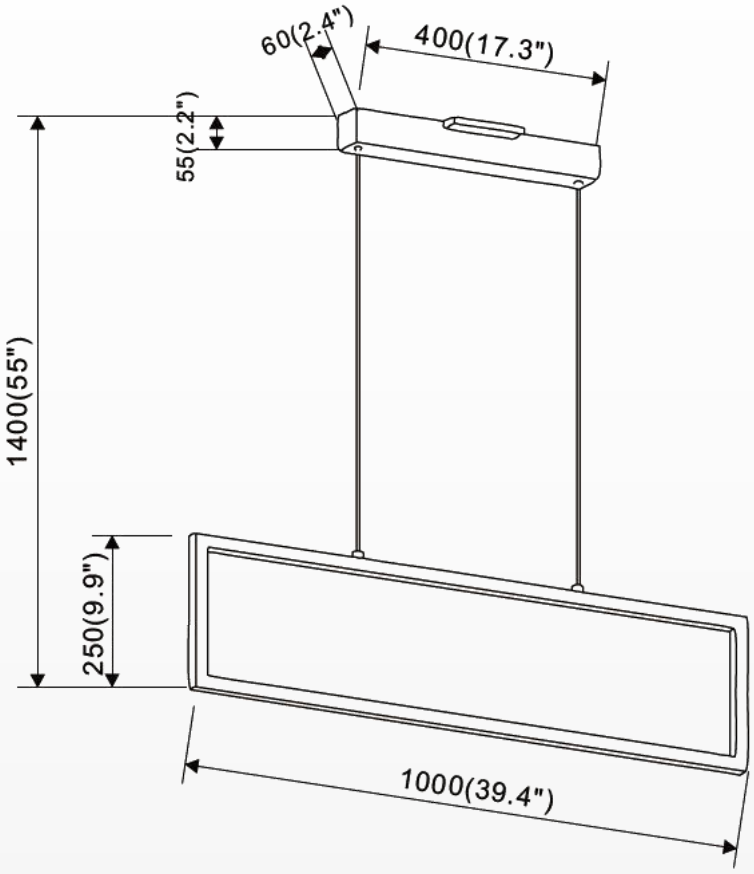

SPECIFICATION

- Dimension: 39.4"×2.4"×55"
- Wattage: 33W
- Voltage: 120V
- Temp: 3000K
- Lumens: 1650LM
- Dimmable: ELV，DIMMING 5%-100%
- CRI: ＞80
- Material： Iron+Aluminum+Diffuser
- Lifespan：50000hs
- Warranty: 3 years
- Operation temperature：-20℃-40℃

AVAILABLE FINISH

BL

Black

WHAT'S IN THE BOX:

mounting bracket; plastic anchors; anchor screws; outlet screws; wire connectors, ground screw, canopy screw, gloves