Warnings and Cautions

Please retain this instruction for future usage and read carefully before assembly.

Make sure you have all the parts & hardware as item list shows.

***3 adults or more** are recommended to install your Sunroom.*

Do not discard any of the packaging until you have checked that you have all the parts and pack of fittings.

Check all bolts for tightness before use, and periodically check and tighten bolts ensure your gazebo works properly.

Some parts might have sharp edger/corners/Please follow basic safety precautions to reduce the risk of hurts.

Avoid installing and settling the solarium in a corridor of heavy wind.

Some assembly parts contain sharp edges, you should wear protective gloves when handling these items.

For safety issues you must not leave the unit unattended if it is not completed, even if it is already anchored to the ground.

*It is essential to place the gazebo on level ground and not less than **6 feet** from any obstruction such as fences, garages, overhanging branches, laundry lines, or electrical wires.*

If you have questions or concerns.

*Please contact us via email at **service@domioutdoorliving.com***

Domi outdoot living

domi
outdoor living

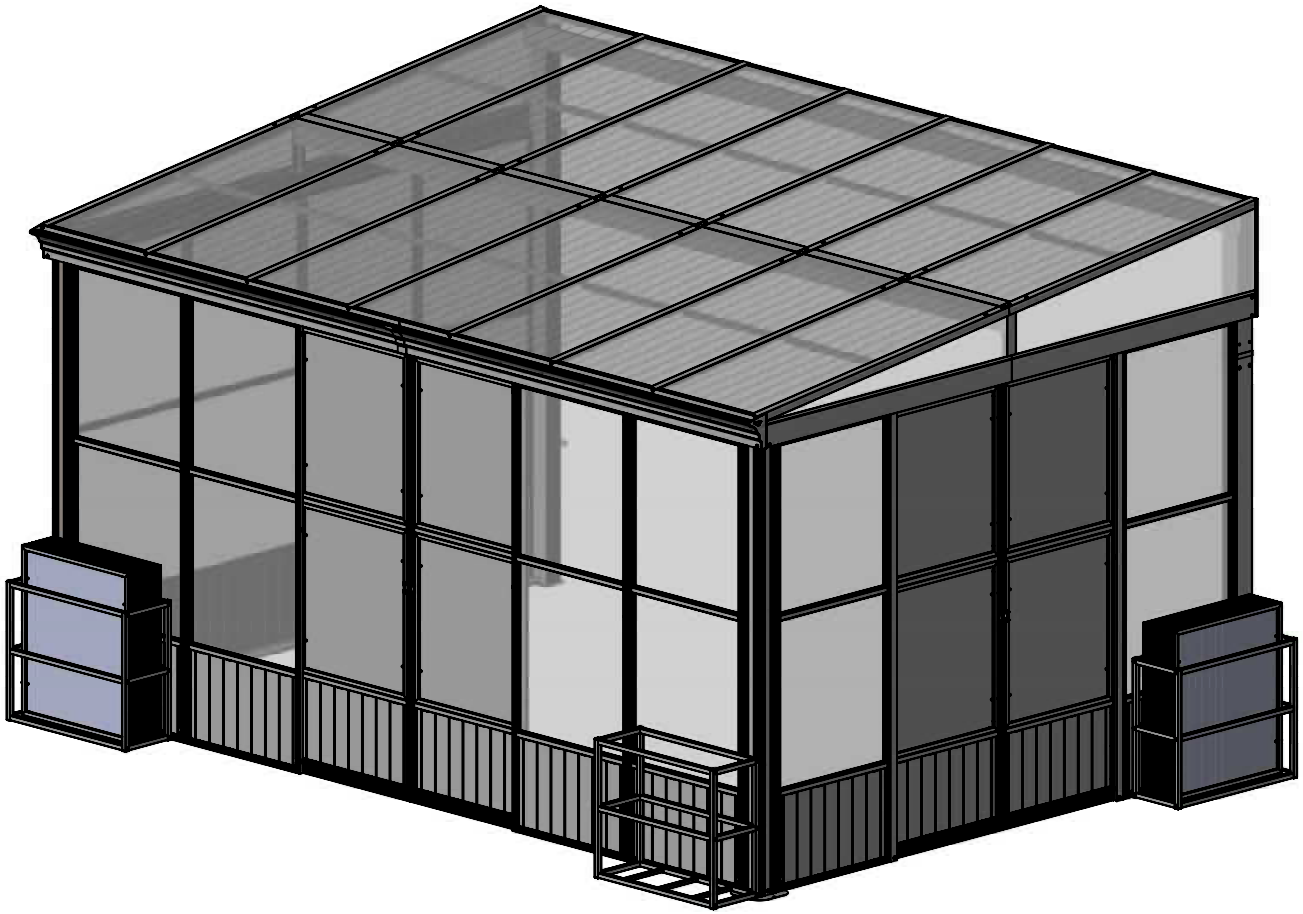

10'x14'

SKU: LGFP1648

Solarium Wall-Mounted Sunroom

Assembly Manual

© Copyright 2023-2025 Domi Outdoor Living LLC.All Rights Reserved.

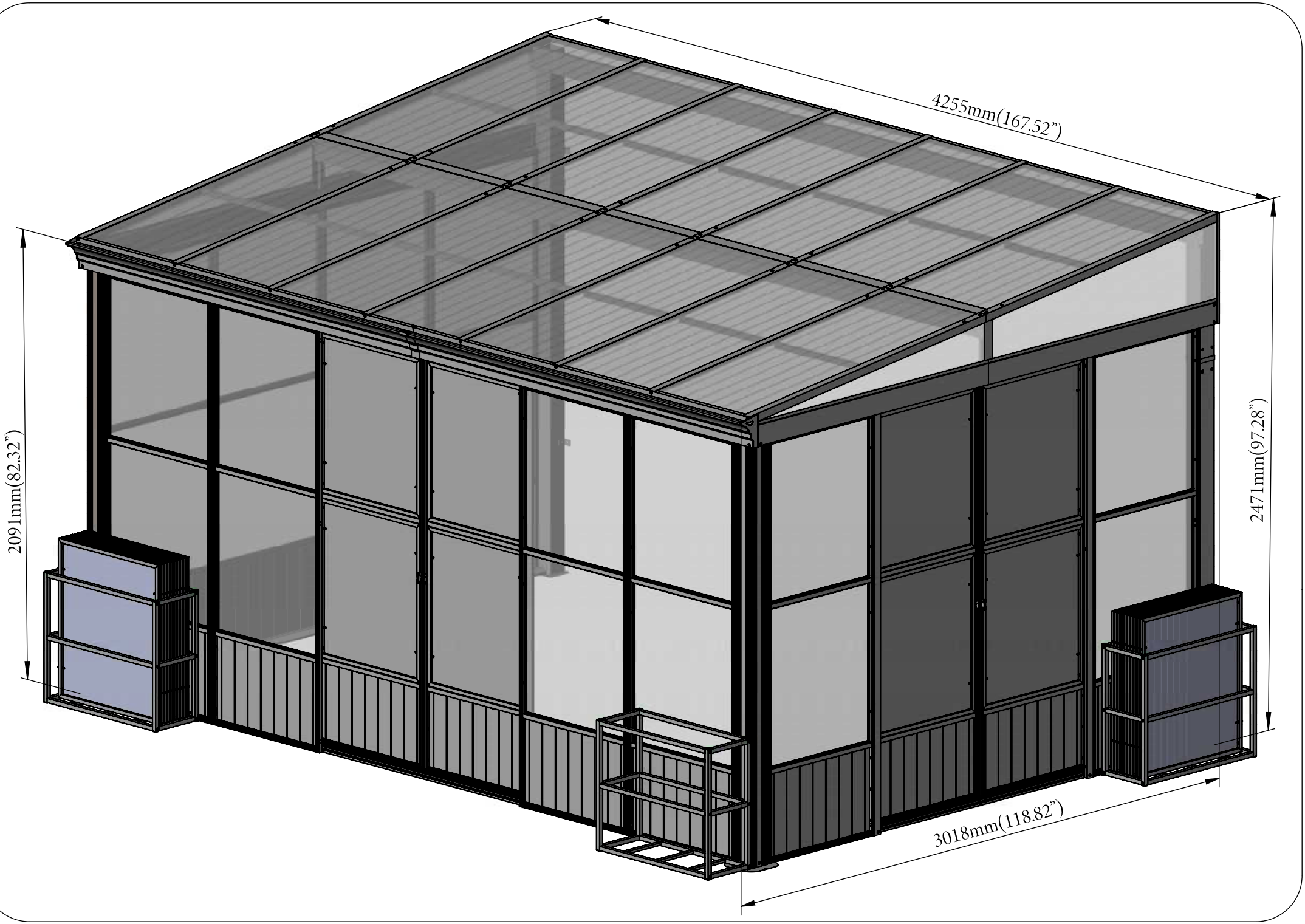
4255mm(167.52")
2091mm(82.32")
2471mm(97.28")
3018mm(118.82")

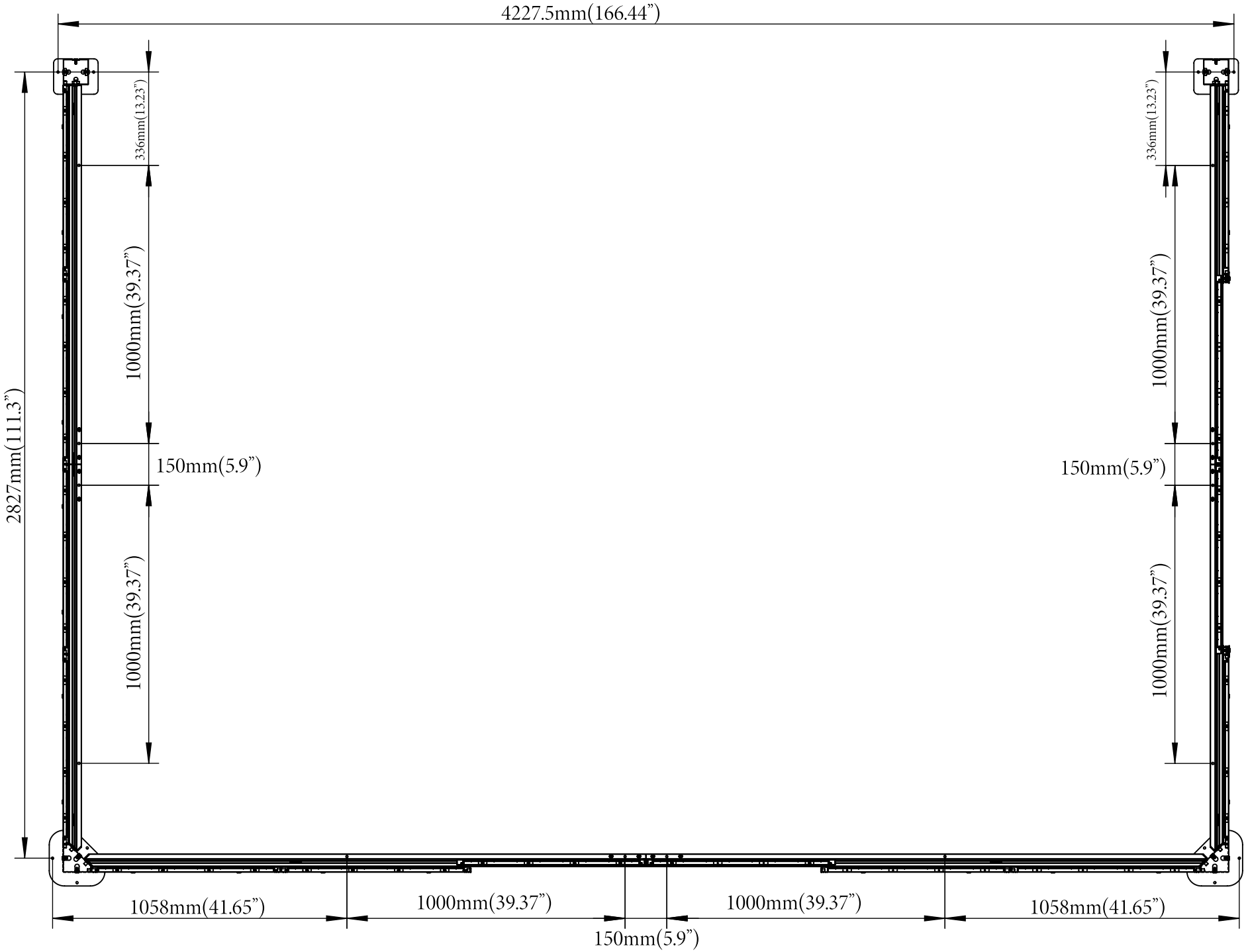
4227.5mm(166.44")
336mm(13.23")
336mm(13.23")
2827mm(111.3")
1000mm(39.37")
1000mm(39.37")
150mm(5.9")
150mm(5.9")
1000mm(39.37")
1000mm(39.37")
1058mm(41.65")
1000mm(39.37")
1000mm(39.37")
1058mm(41.65")
150mm(5.9")

Thank you for your purchase of

Domi outdoor living's Sunroom

Read and follow this assembly and operation guide.

To reduce personal injury and damage to you Sunroom

We recommend a **three-person team** for assembly and disassembly.

Please **remove** snow accumulation at all times.

Please schedule enough time to complete the assembly of the sunroom.

It will takes approximately 7 hours to set up.

If you like our products, please tell other customers

If you have problem with our products, please tell us

Please feel free to contact us.

DOMI OUTDOOR LIVING

domi
outdoor living

Pre-assembly

TOOLS THAT MAY BE REQUIRED (Not included in boxes)

***NOTE: Tools / equipment are not shown to actual size and scale.**



LEVEL

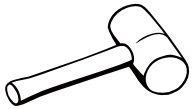

RUBBER MALLET



PHILLIPS SCREW



DRILL

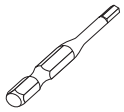

ALLEN KEY

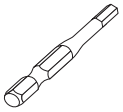

ALLEN KEY

EQUIPMENT REQUIRED (Not included in boxes)

***NOTE: Equipment are not shown to actual size and scale.**



SAFETY HAT



GLOVES



SAFETY GOGGLES



STEPLADDER

Please leave all the bolts a little loose when assembling and then go back to the end of the assembly process to tighten all of the bolts.

Matters needing attention



1. Three or more people are required for assembly.



2. Do not fully tighten screws prior to complete assembly.

Regulation

IMPORTANT: A sunroom may entail to purchase a municipal permit or be subject to specific building codes. It is the consumer's responsibility to inform themselves of any restrictions.

Care and Cleaning:

For cleaning, use a domestic soap or detergent and wash with warm water using a sponge or fabric. Rinse with clean water.

1

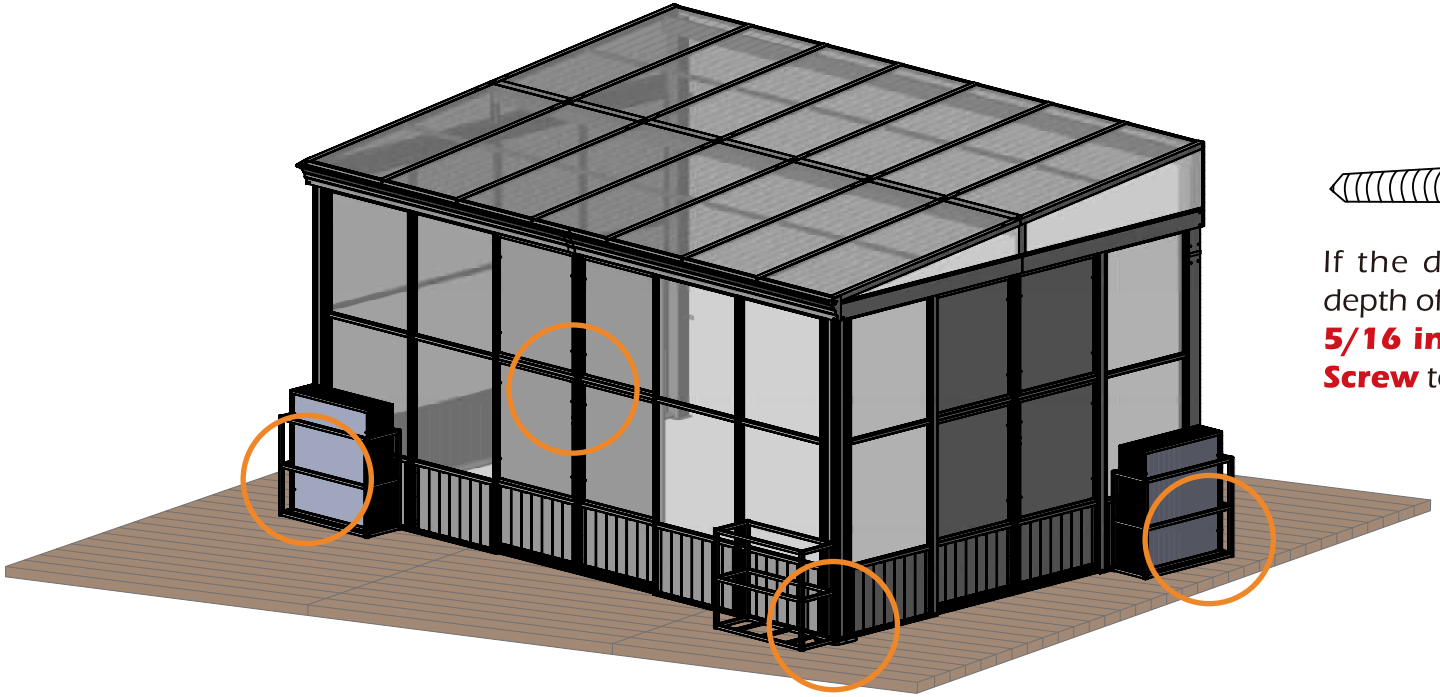

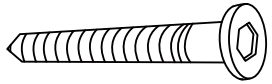

x12

If the deck is hard wood and the depth of it is over 3 inch, you can use **5/16 in. ×4 in. Structural Wood Screw** to mount the pergola.

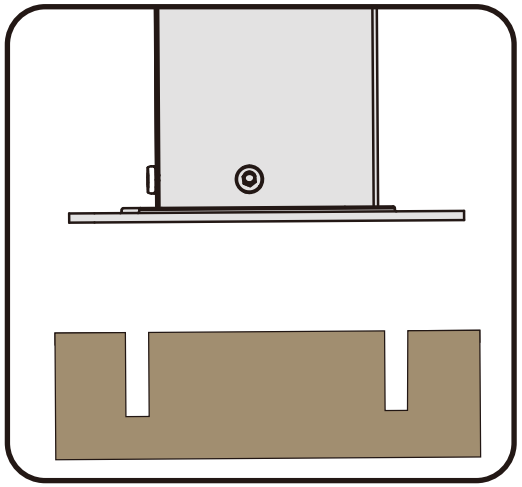

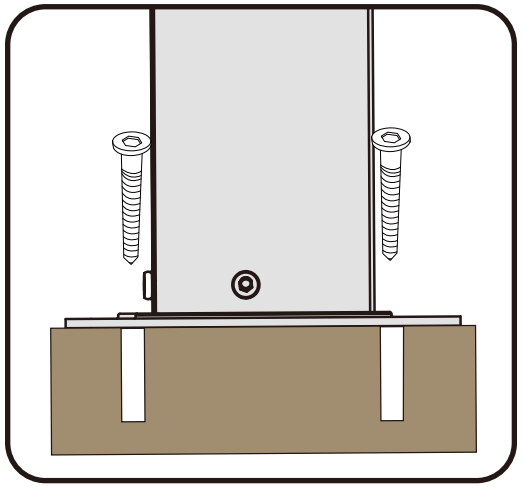

2

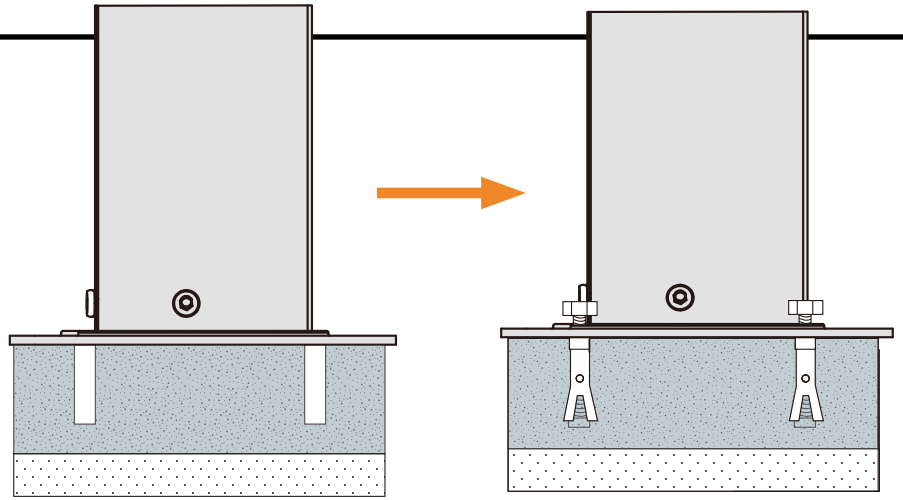

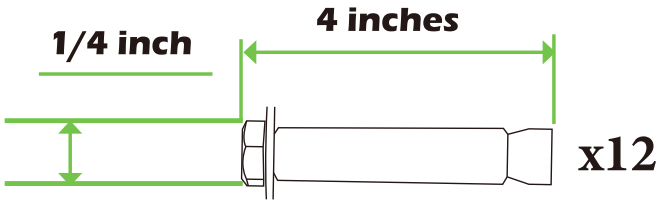

If the ground is concreted and the depth of it is over 3 inch, you can use 1/4 inch expansion bolts to mount the pergola

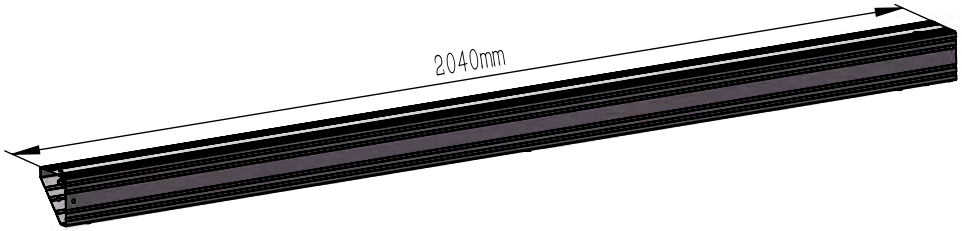

A1 1X

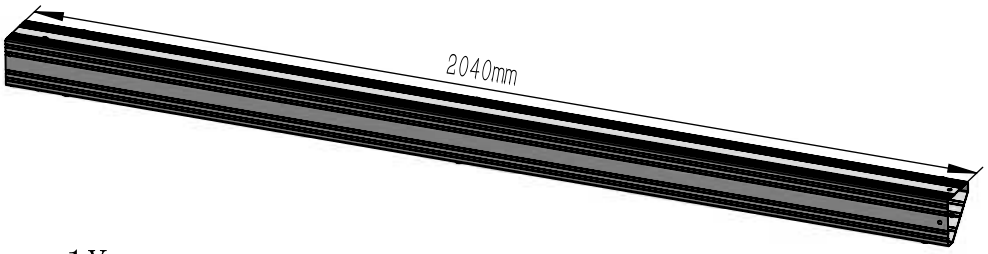

A2 1X

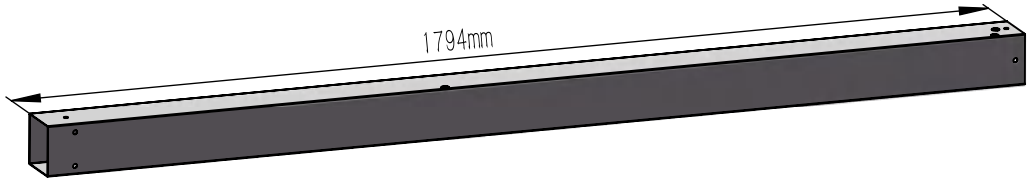

A3 1X

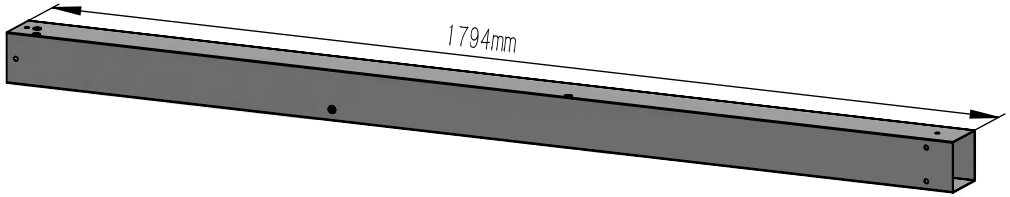

A4 1X

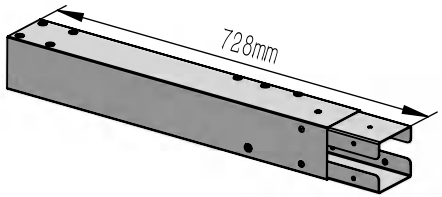

A5 1X

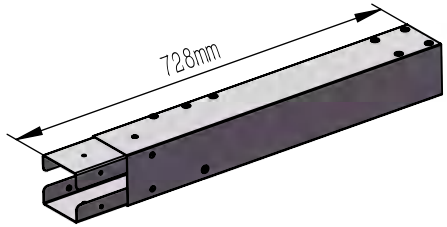

A6 1X

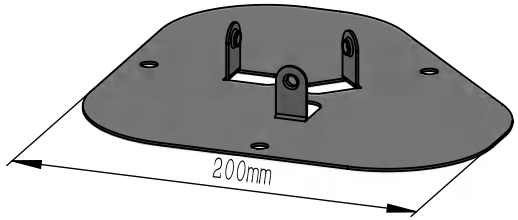

A7 2X

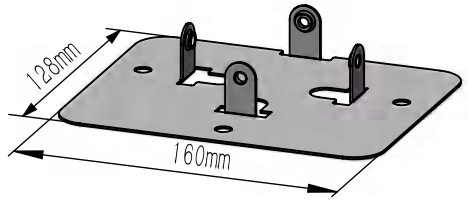

A8 2X

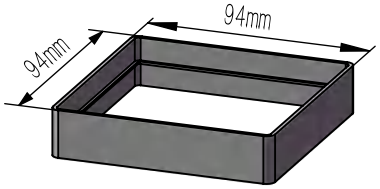

A9 2X

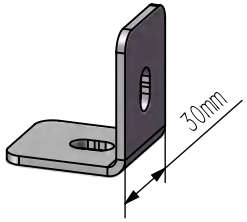

A10 4X

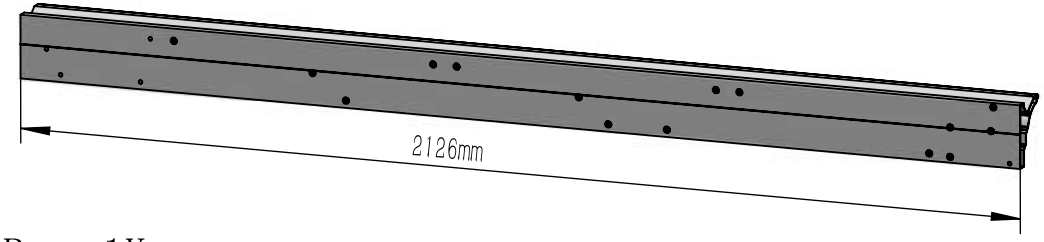

B1 1X

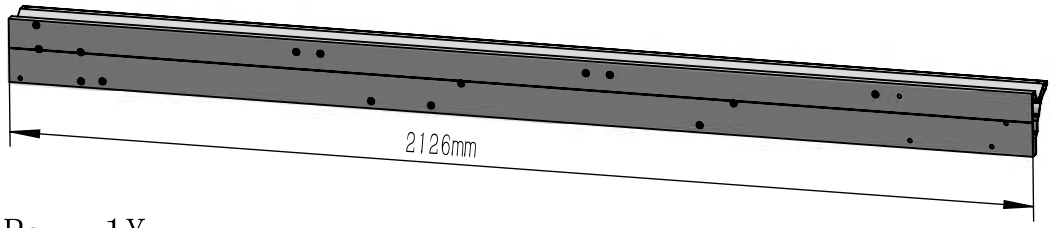

B2 1X

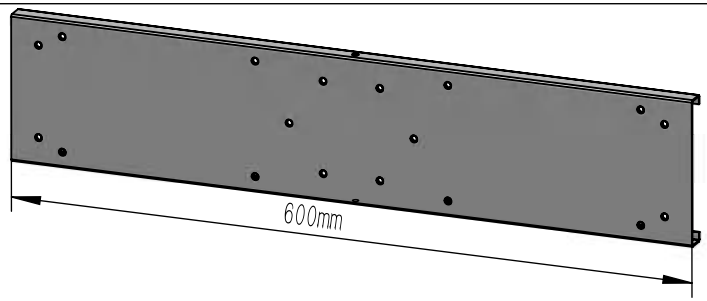

B3 1X

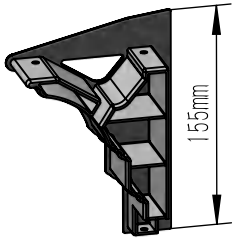

B4 1X

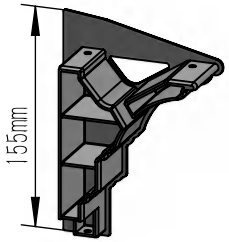

B5 1X

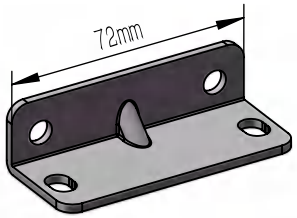

B6 6X

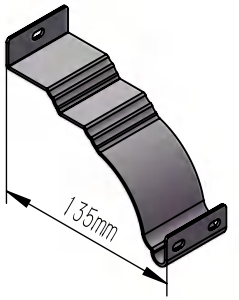

B7 1X

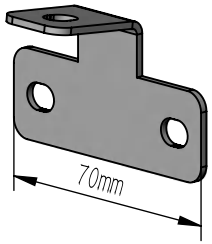

B8 18X

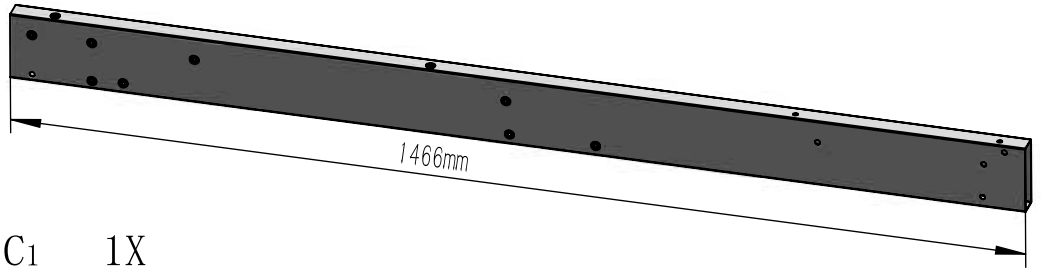

C1 1X

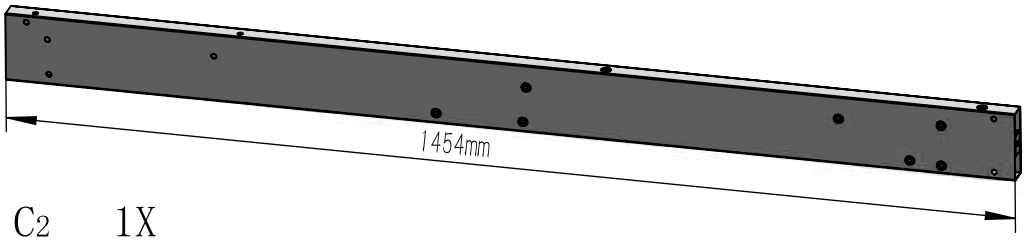

C2 1X

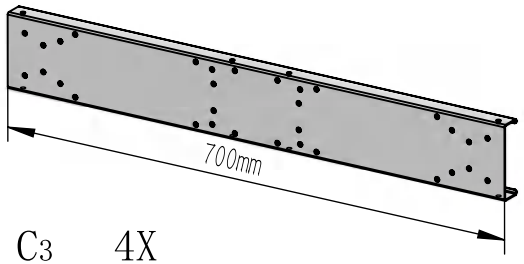

C3 4X

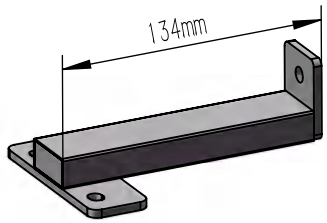

C4 2X



C5 1X

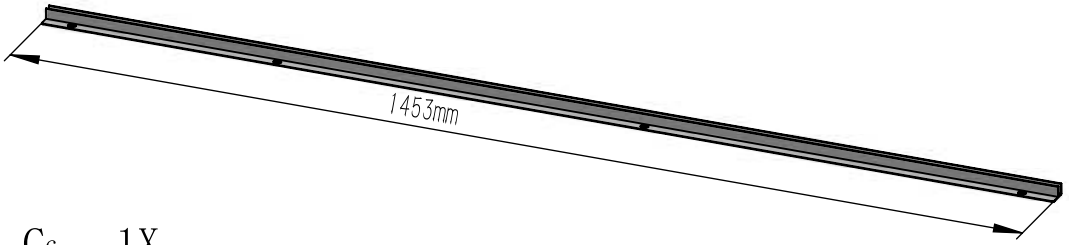

C6 1X

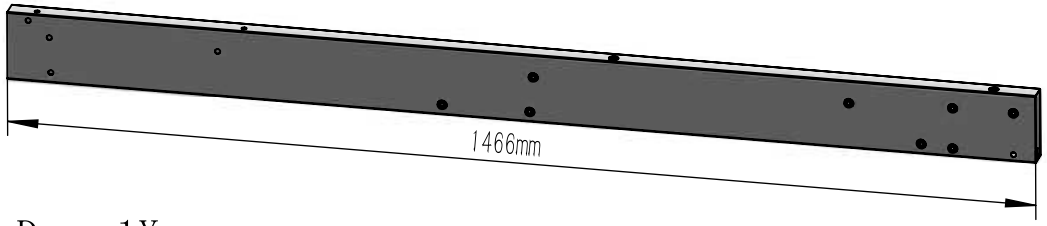

D1 1X

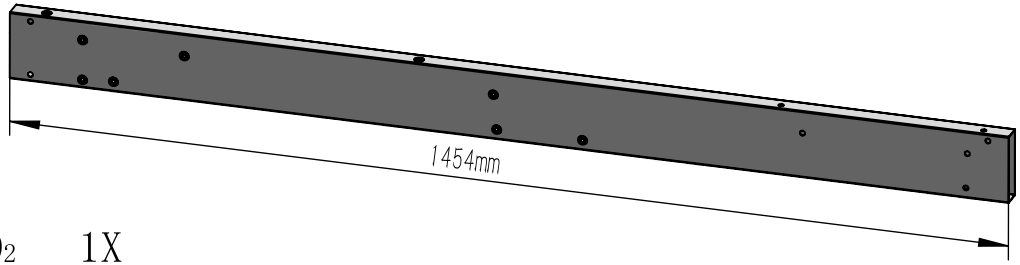

D2 1X

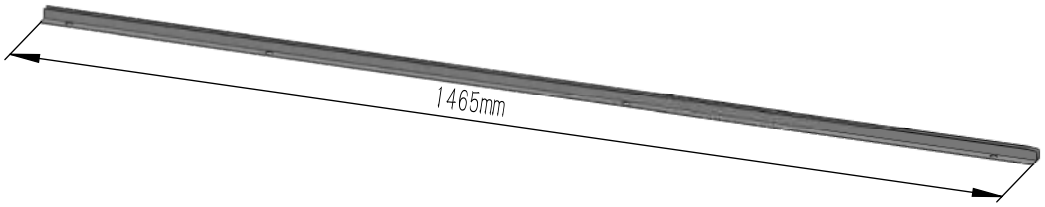

D_3 1X

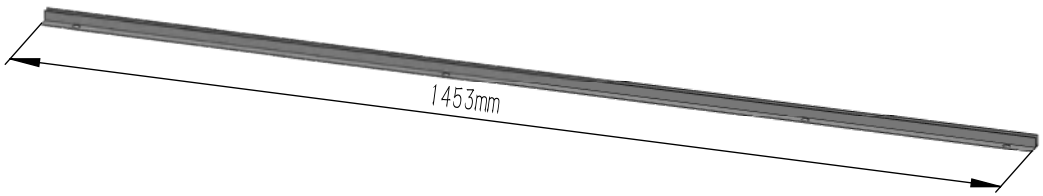

D_4 1X

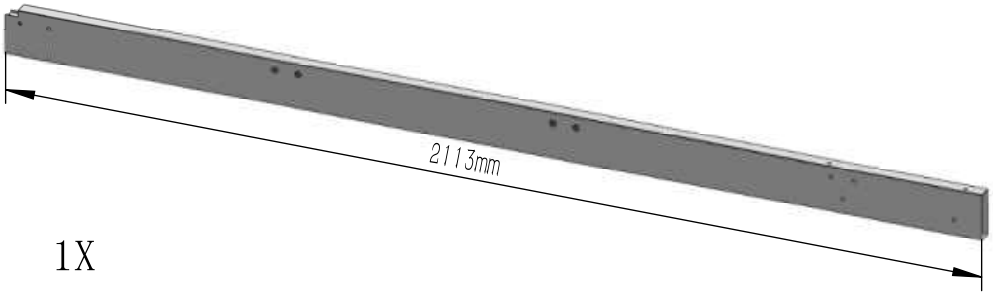

E_1 1X

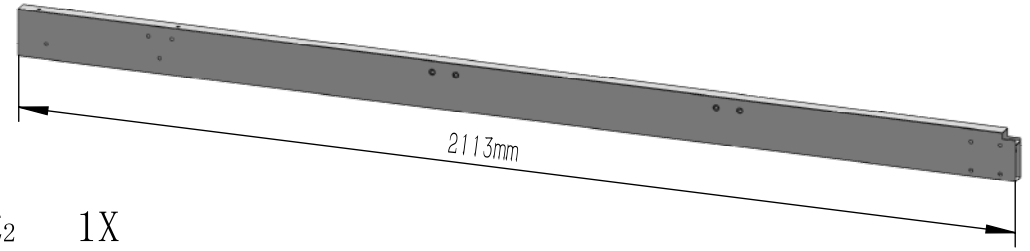

E_2 1X

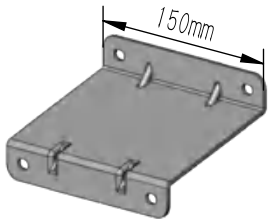

E_3 1X

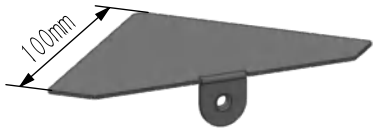

E_4 2X

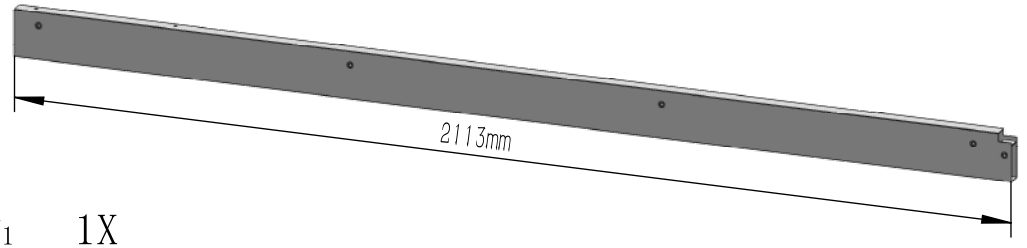

F_1 1X

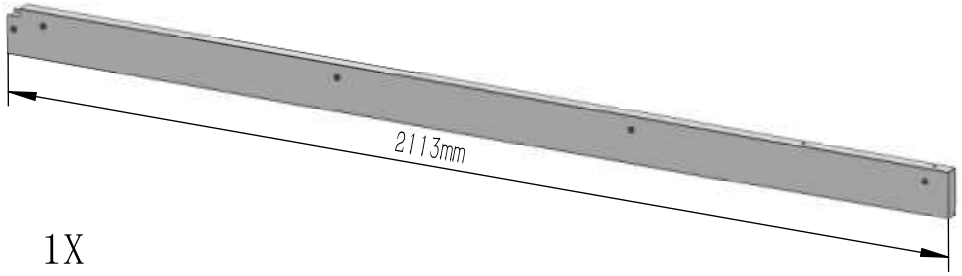

F_2 1X

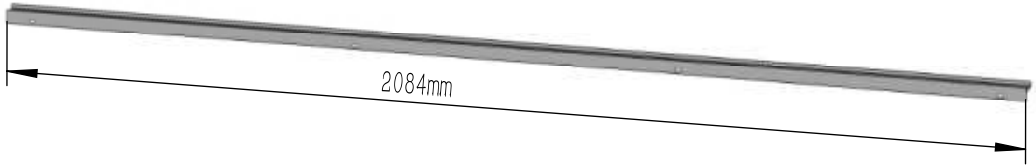

F_3 2X

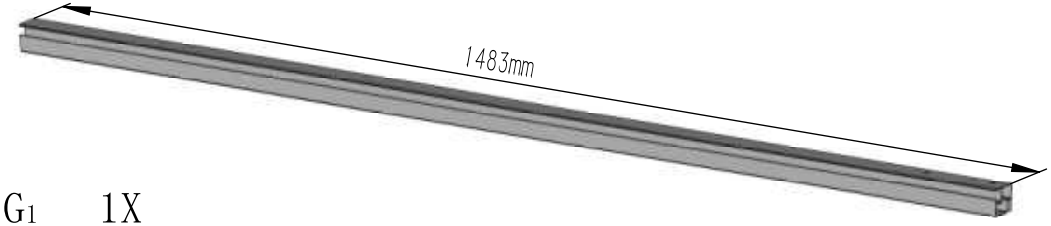

G_1 1X

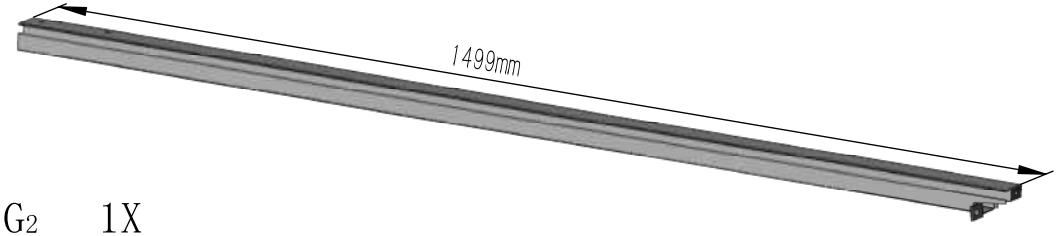

G_2 1X

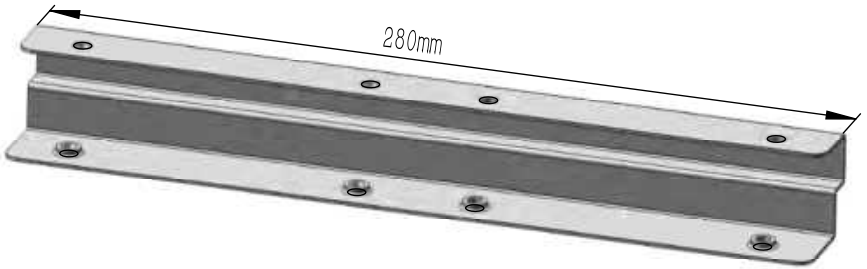

G3 2X

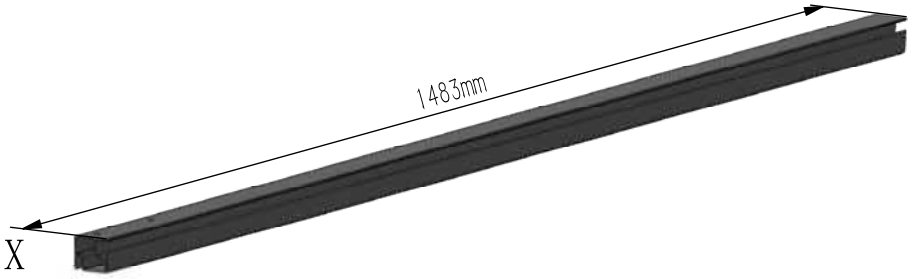

G4 1X



G5 1X

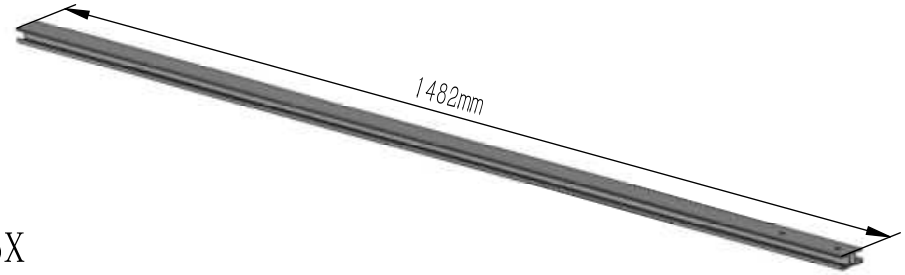

G6 6X

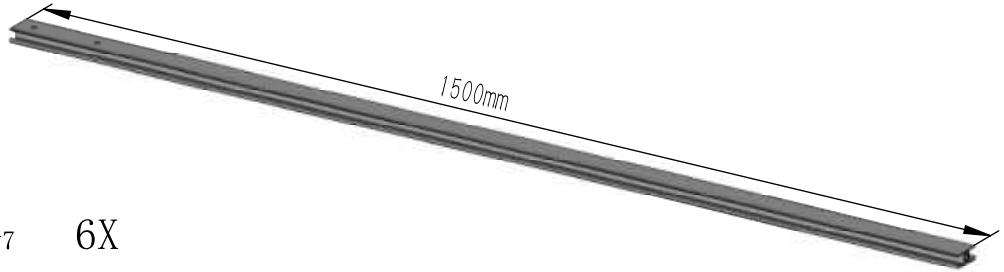

G7 6X

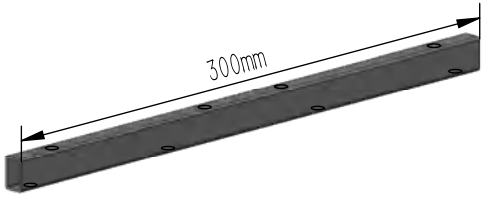

G8 6X

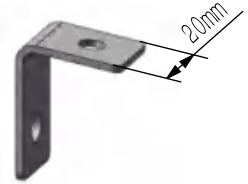

G9 4X

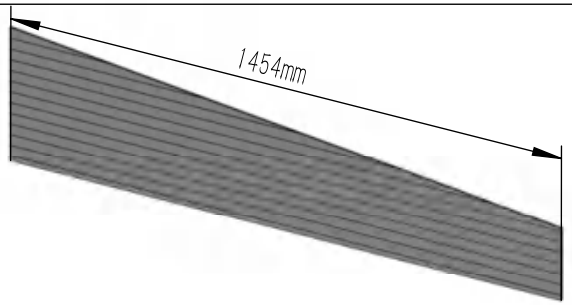

H1 1X

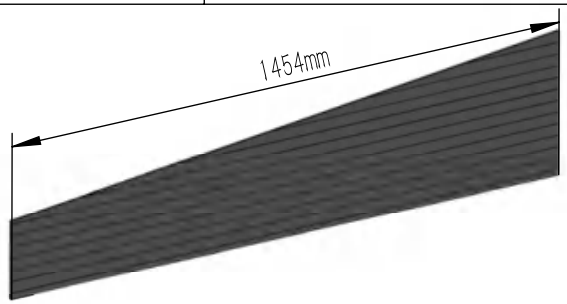

H2 1X

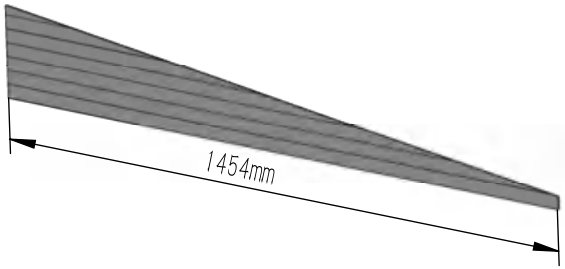

H3 1X

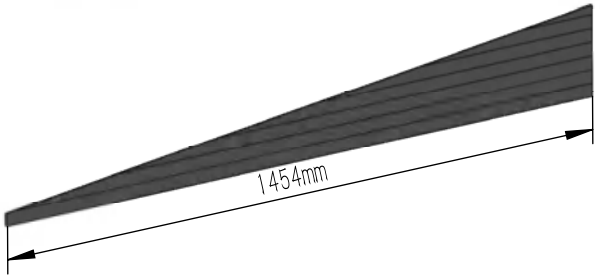

H4 1X

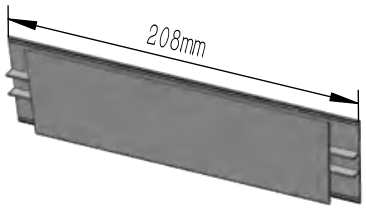

H5 1X

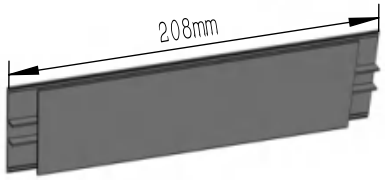

H6 1X

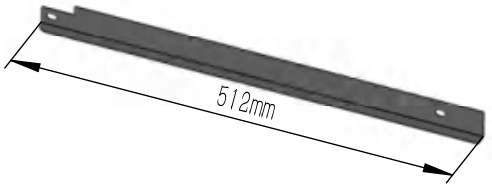

H7 1X

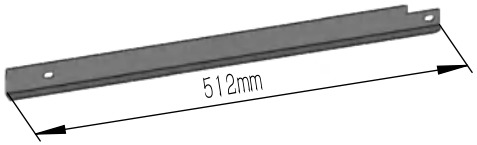

H8 1X

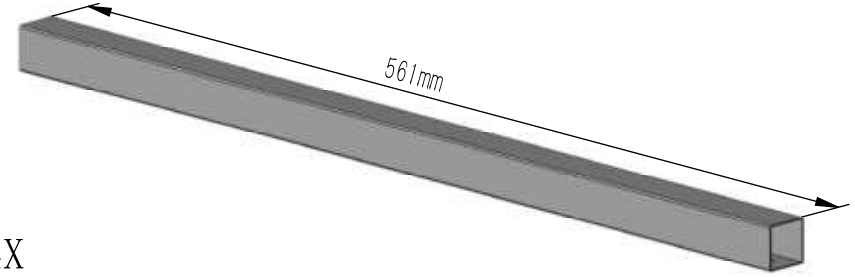

J1 14X

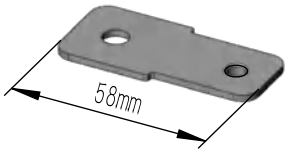

J2 4X

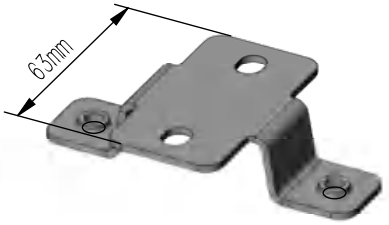

J3 12X

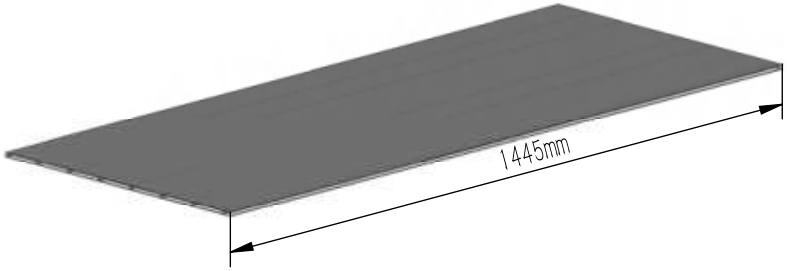

K1 7X

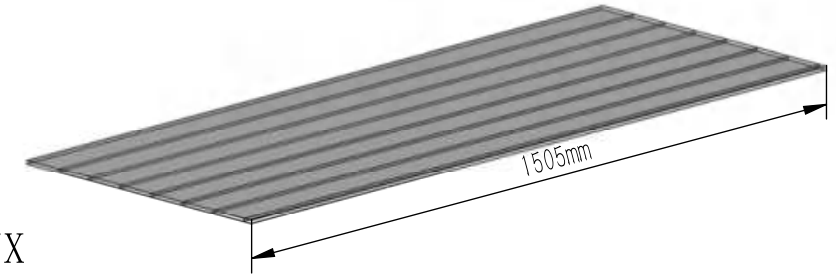

K2 7X

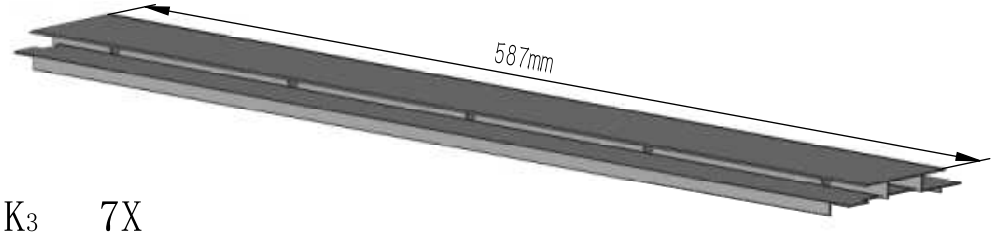

K3 7X

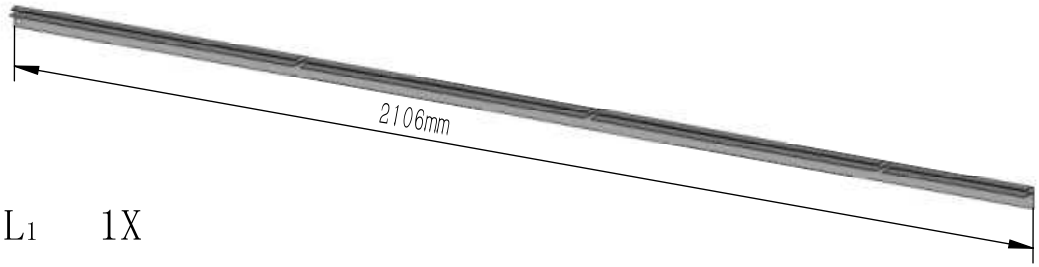

L1 1X

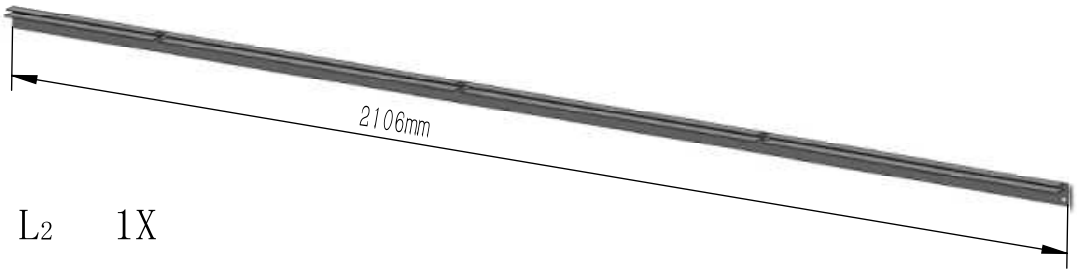

L2 1X

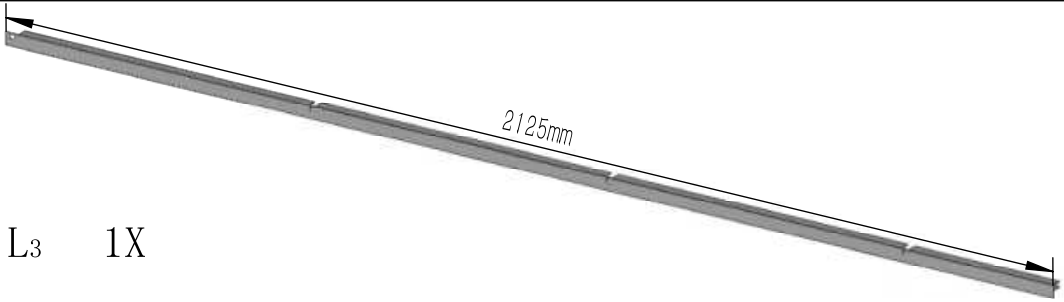

L3 1X

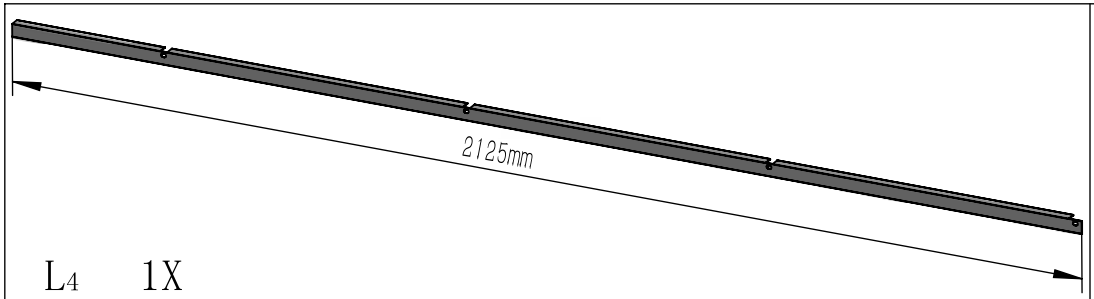

L_4 1X

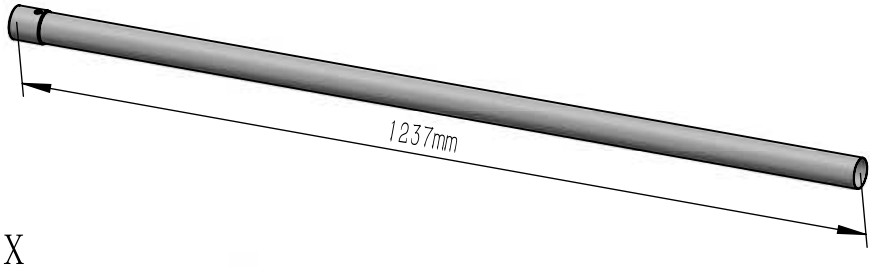

M_1 1X

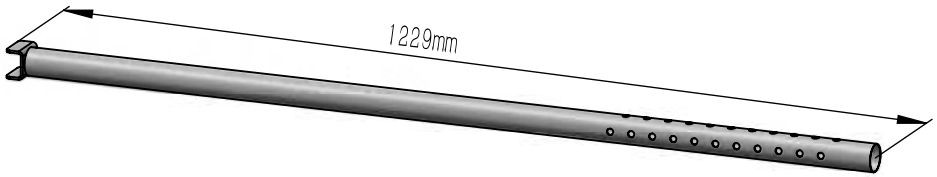

M_2 1X

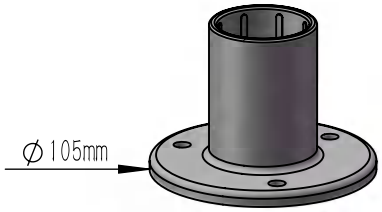

M_3 1X

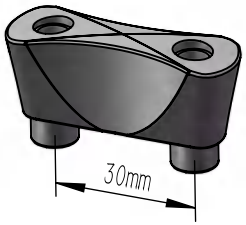

M_4 12X

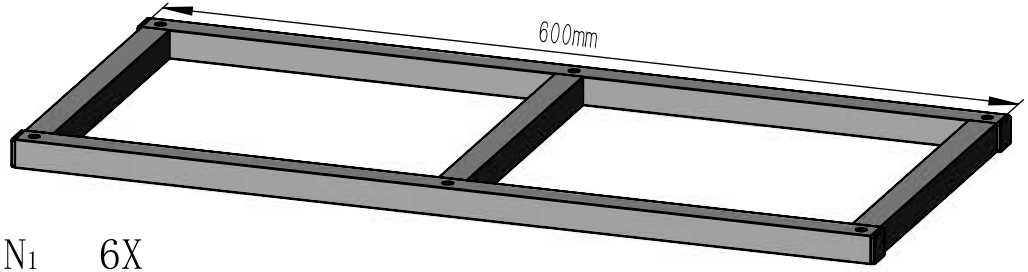

N_1 6X

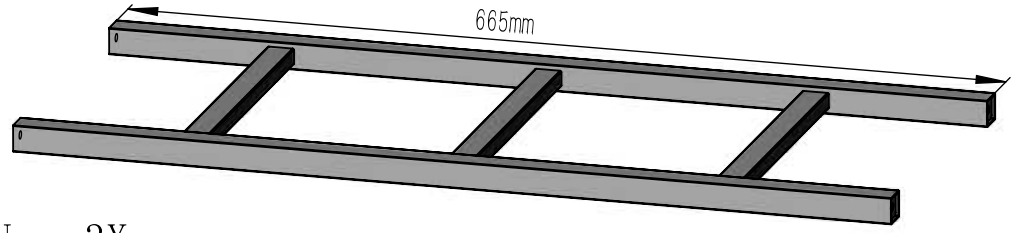

N_2 3X

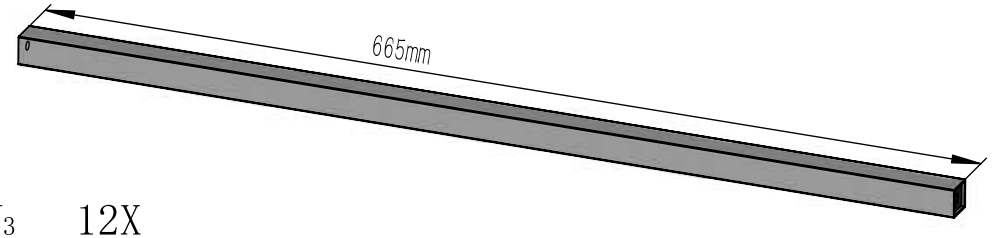

N_3 12X

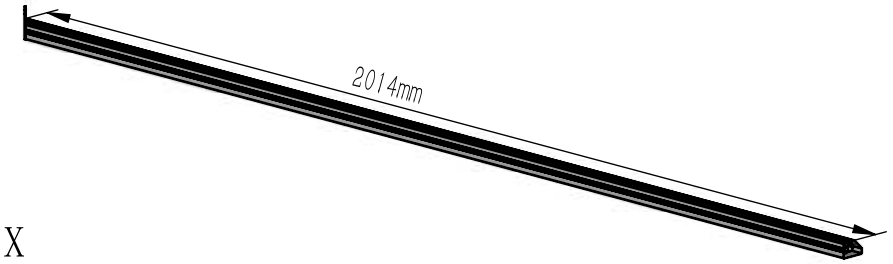

O_1 1X

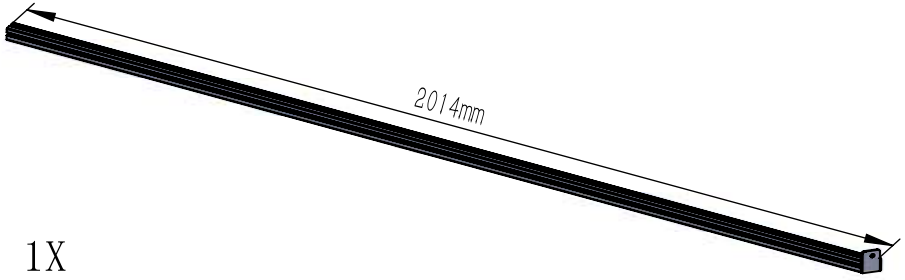

O_2 1X

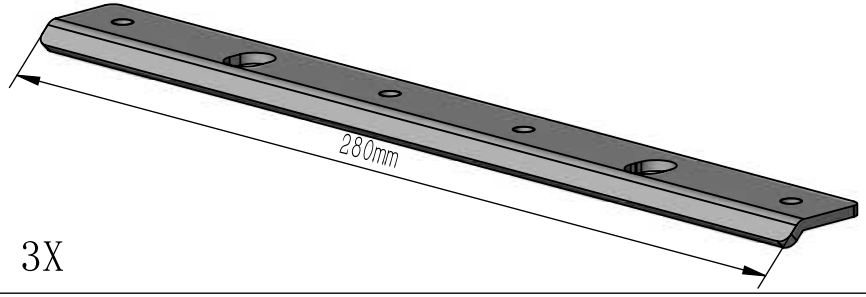

O_3 3X



O_4 1X

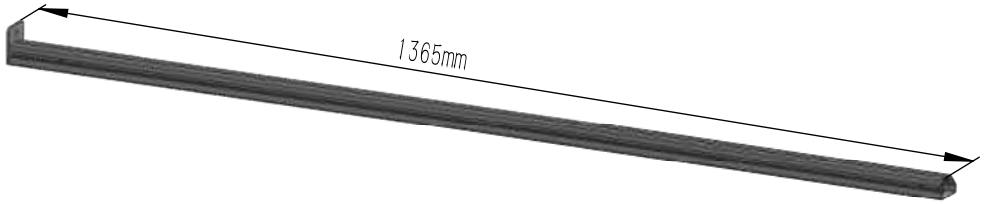

O_5 1X

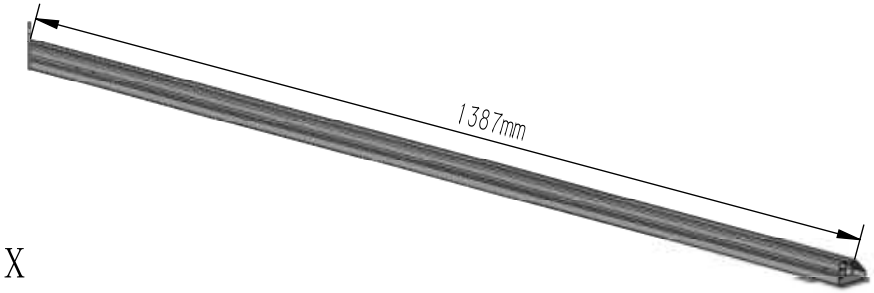

O_6 1X

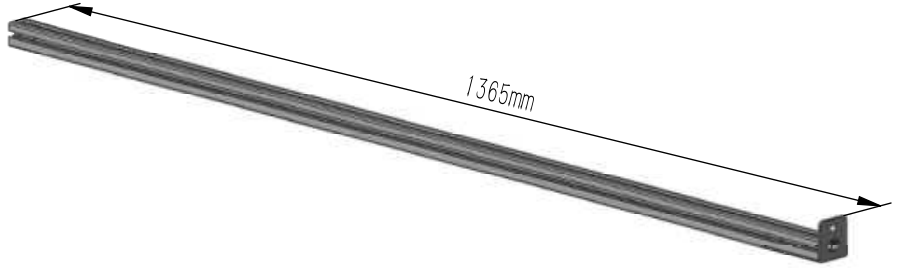

O_7 1X



P_1 4X



P_2 4X



Q_1 2X

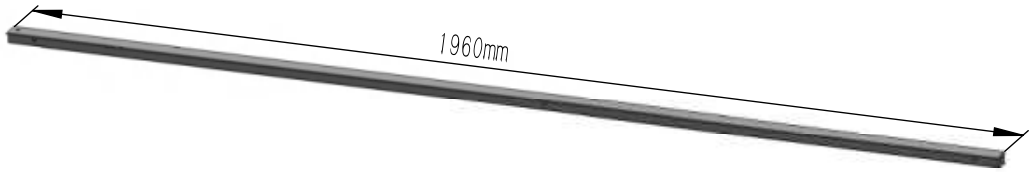

Q_2 2X

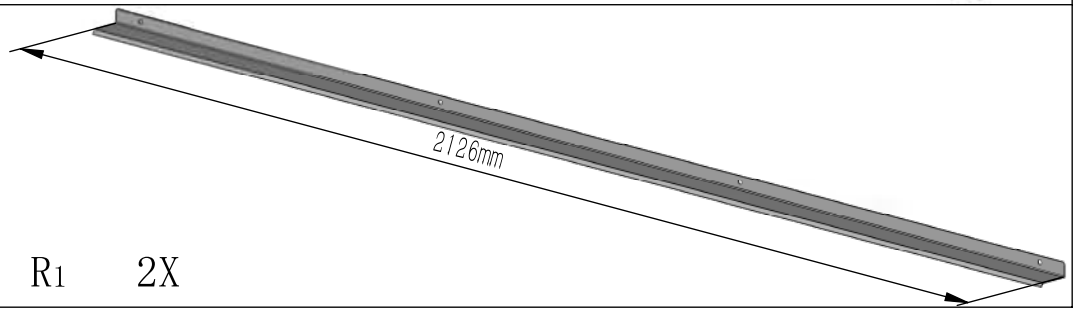

R_1 2X

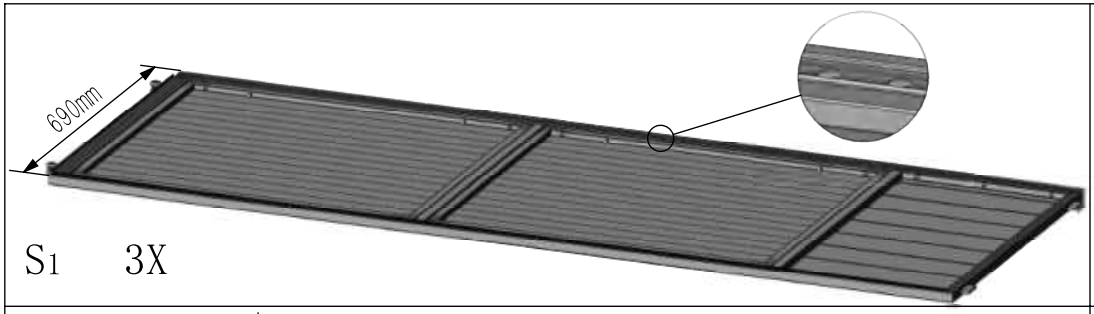

S1 3X

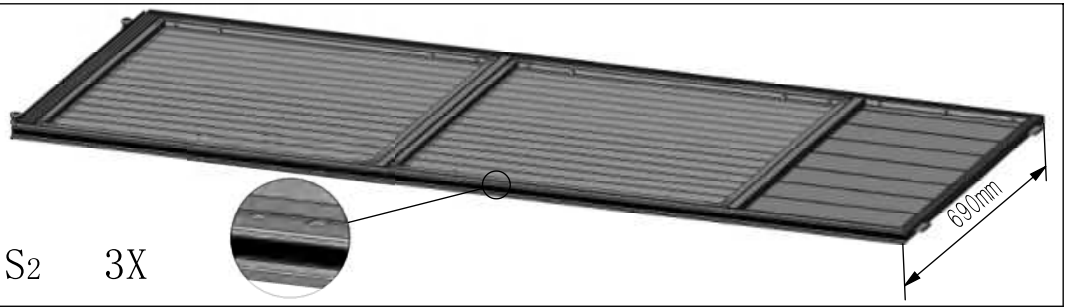

S2 3X

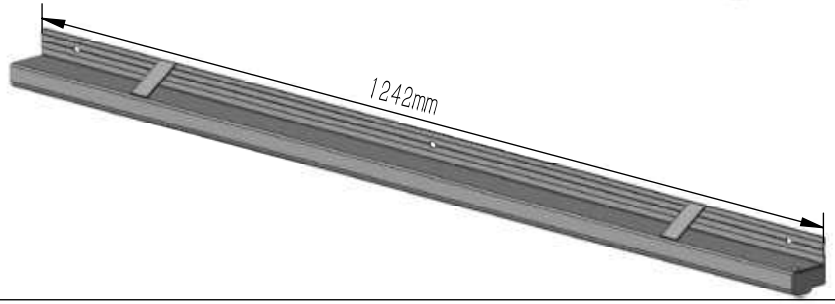

T1 1X

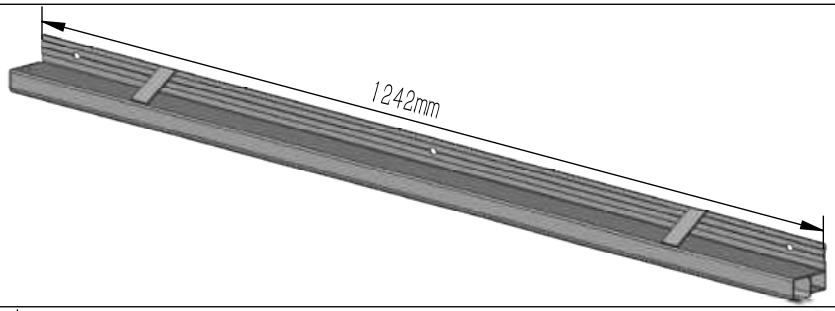

T2 1X

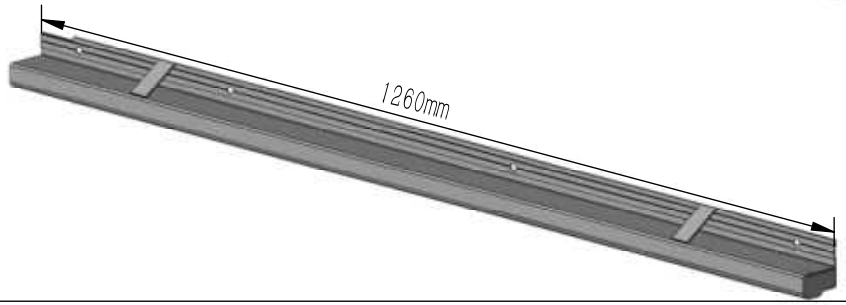

T3 2X

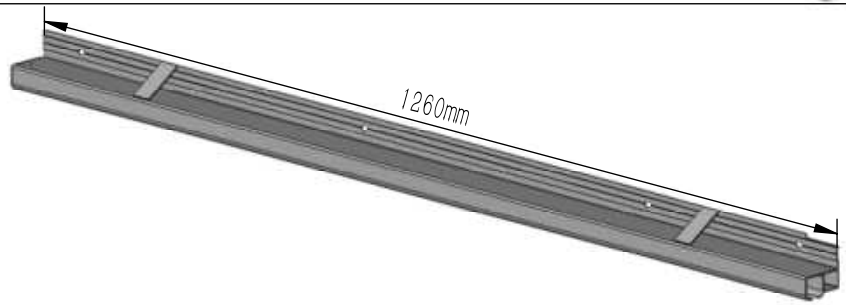

T4 2X

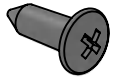 1# 6 ST4.8*13	 2# 1 M5*12	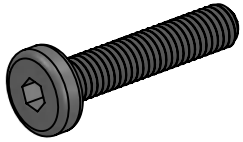 3# 36 M6*30
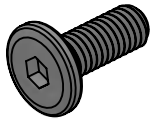 4# 382 M6*16	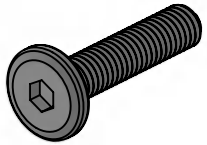 5# 20 M6*28	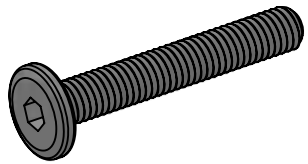 6# 20 M6*40
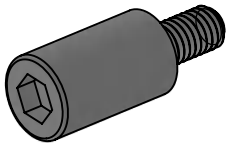 7# 2 M6*12(L20)	 8# 6 M6*15(L30)	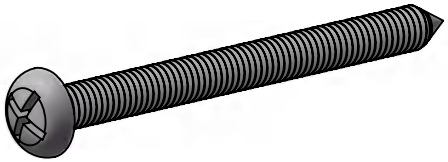 9# 14 ST6*70
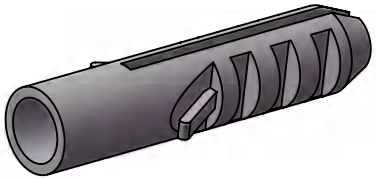 10# 14	 11# 1 Waterproof Tape	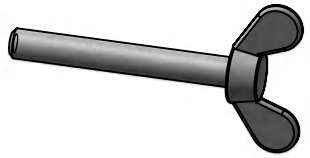 12# 1 M8*60
 13# 1 M8	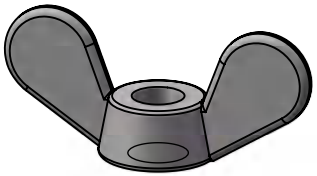 14# 1 M8	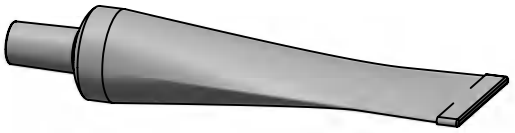 15# 1 Silicone Sealant

 16# 1 S4		
 19# 24 M6*30	 20# 24	 21# 24
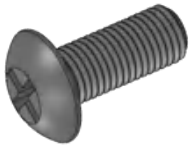 22# 24 M4*10	 23# 12 M4	 Metal Square Nuts 24# 20 M6
 25# 1 S5	 26# 6	
 28# 1 Anti Dust Tape		

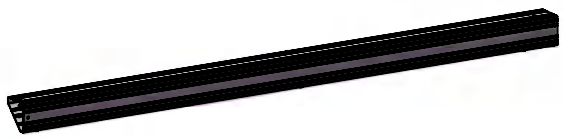

A1 1X

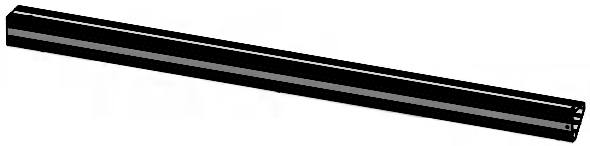

A2 1X

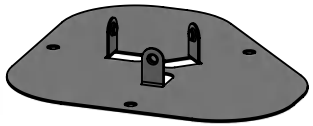

A7 2X

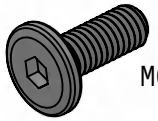

4# 6X

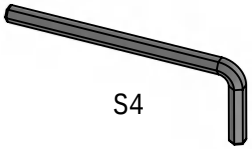

16# 1X

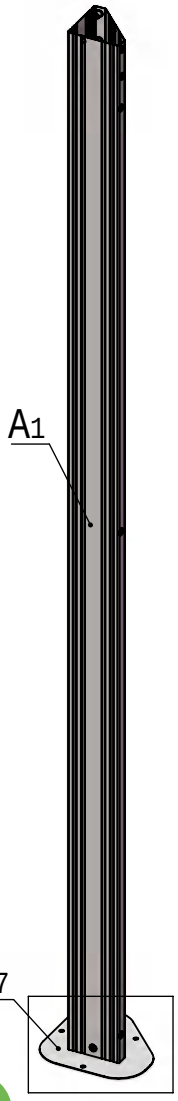

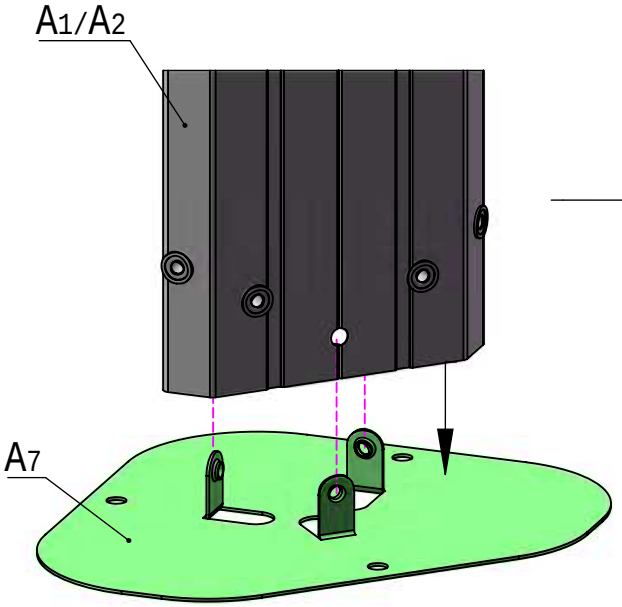

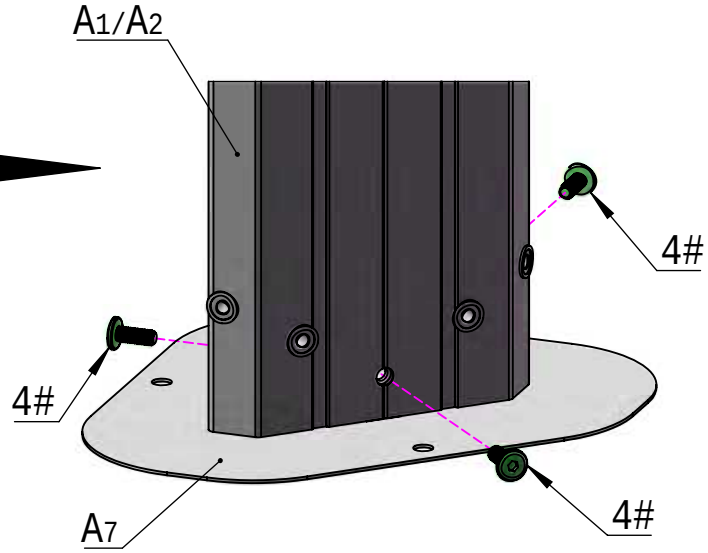

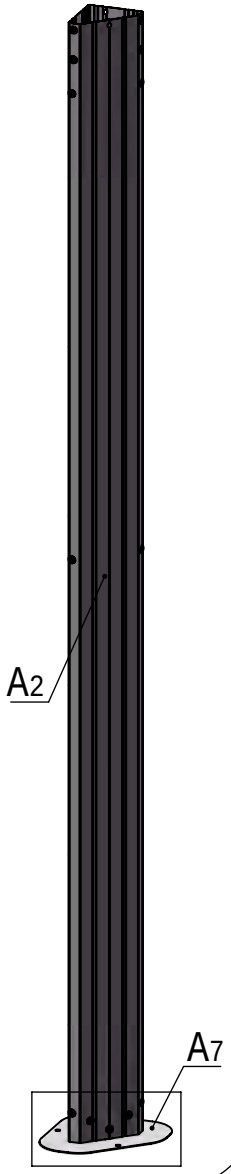

1

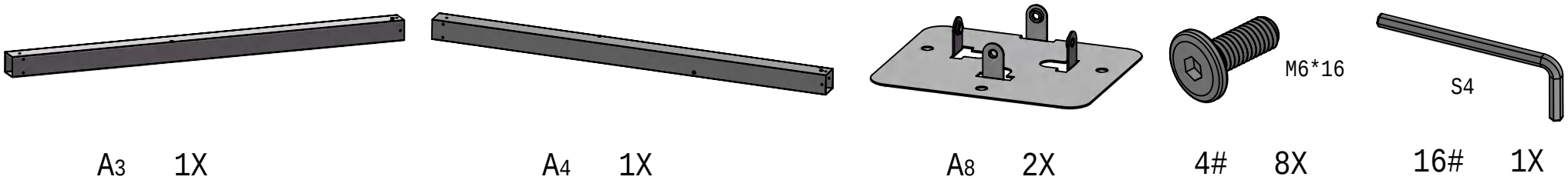

A3 1X A4 1X A8 2X 4# 8X 16# 1X

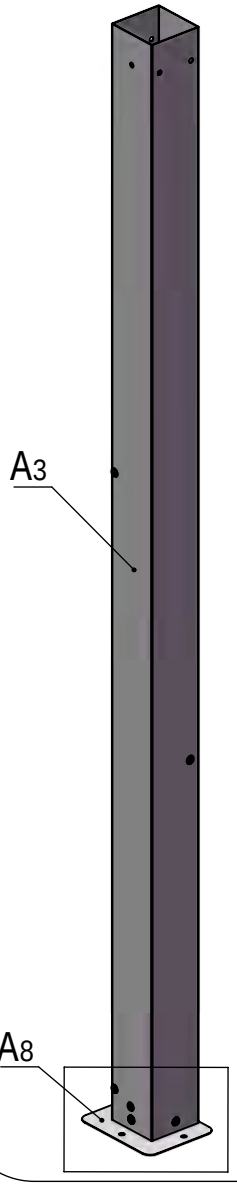

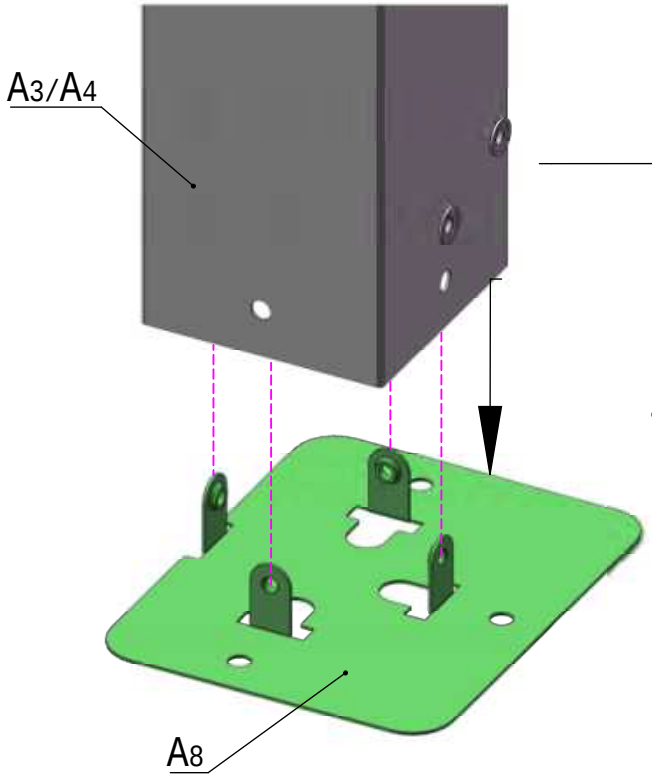

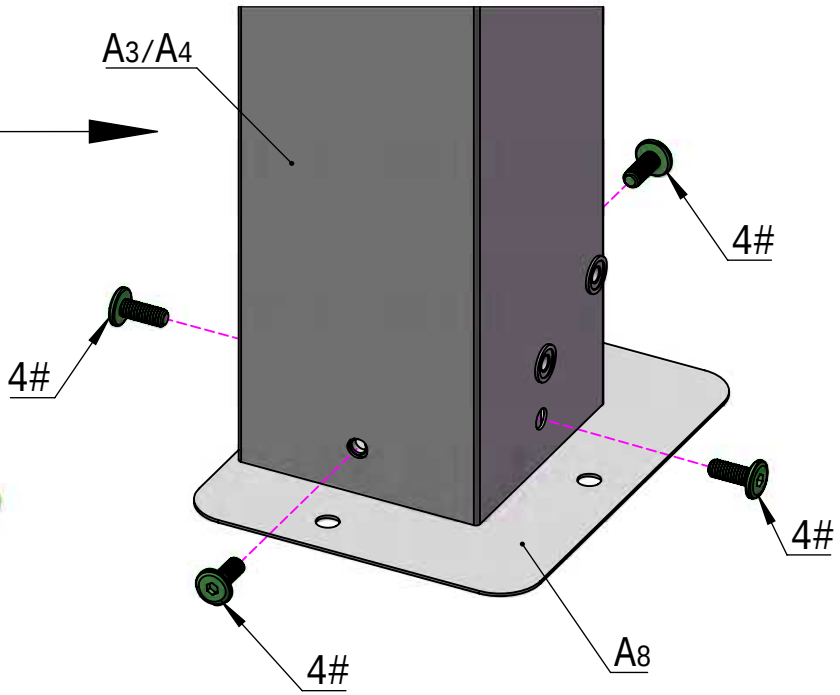

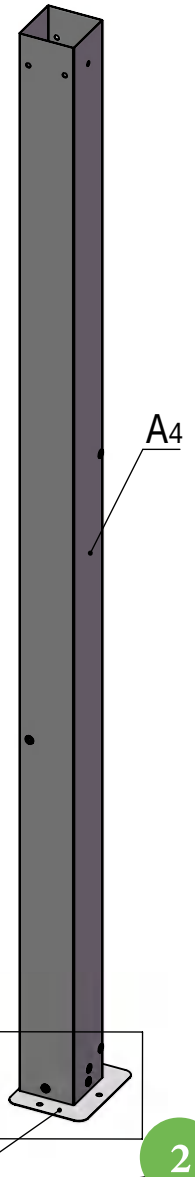

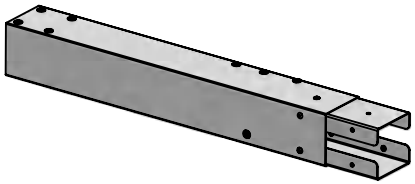

A5 1X

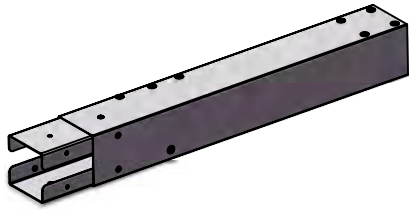

A6 1X

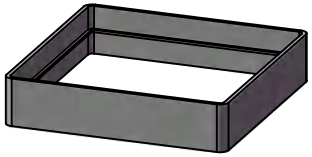

A9 2X

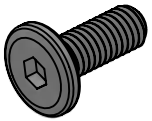

4# 12X

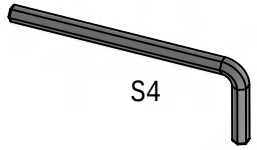

16# 1X

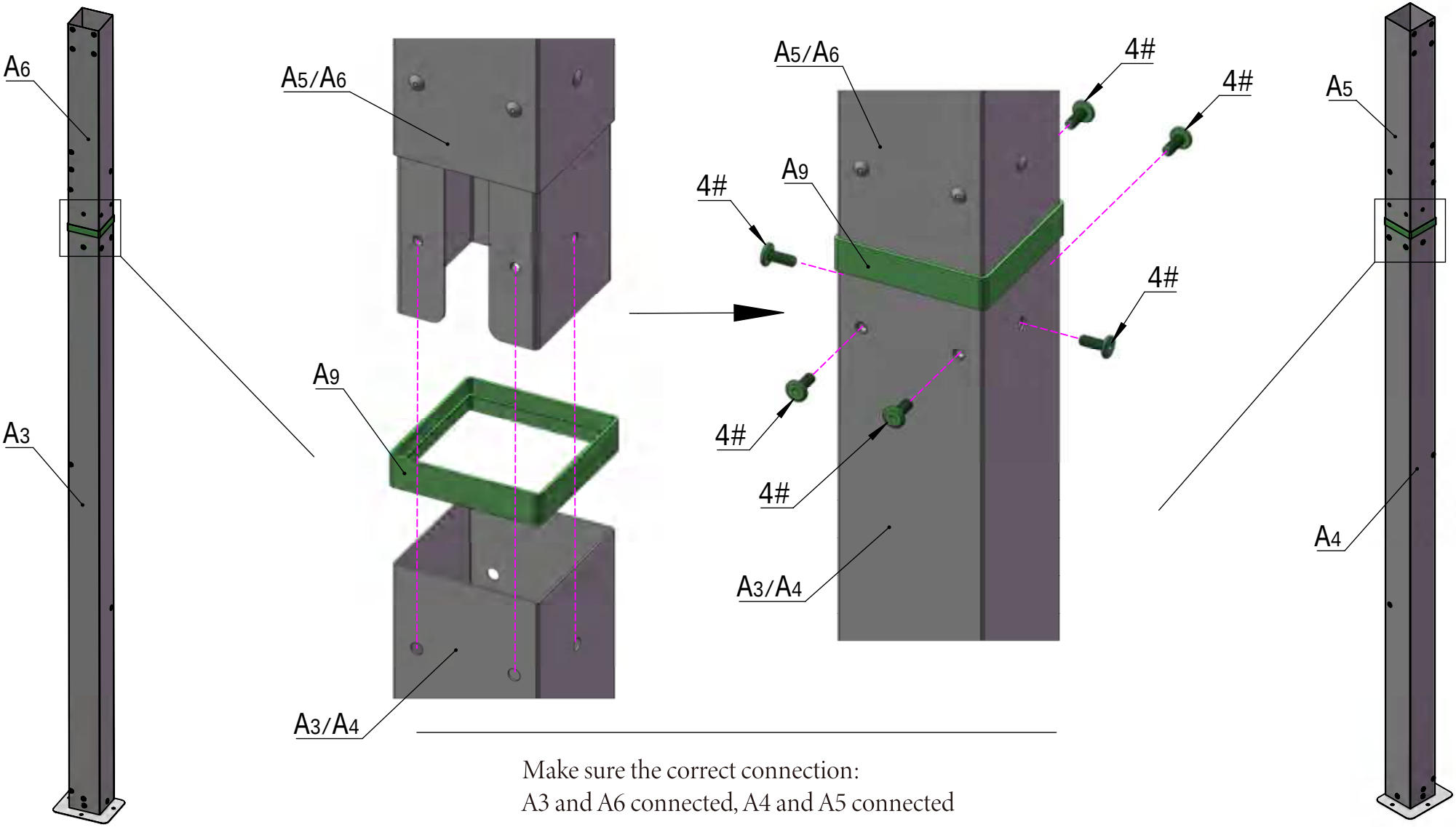

Make sure the correct connection:
A3 and A6 connected, A4 and A5 connected

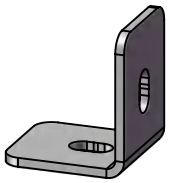

A10 4X

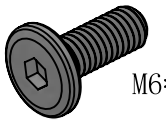

4# 4X

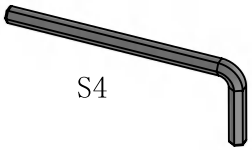

16# 1X

The bracket #A10 is used to fix the post against the wall.
If you don't need it fixed, please retain for future use and skip this step.

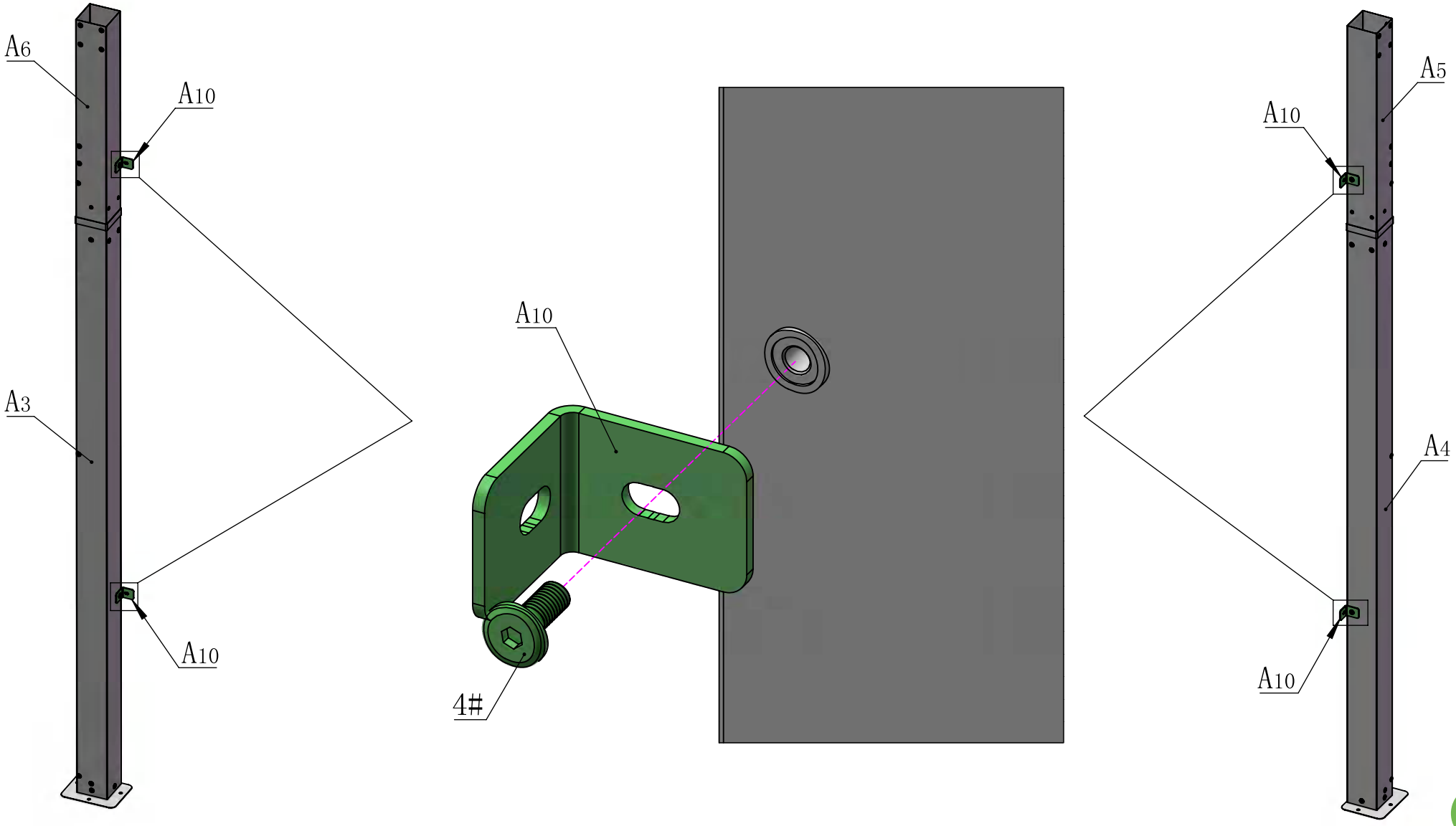

Front Beam Assembly

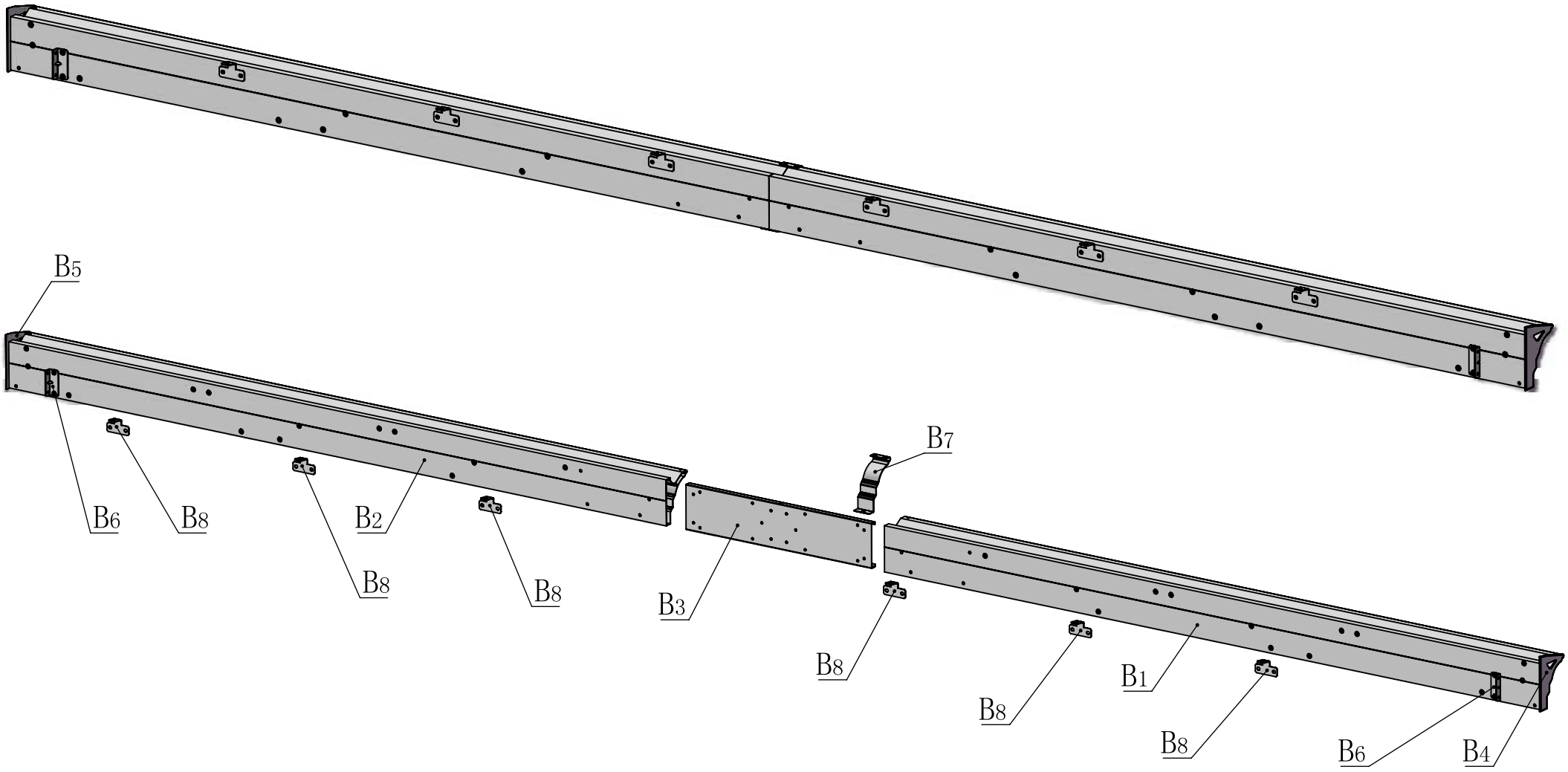



B1 1X



B4 1X



ST4.8*13

1# 2X

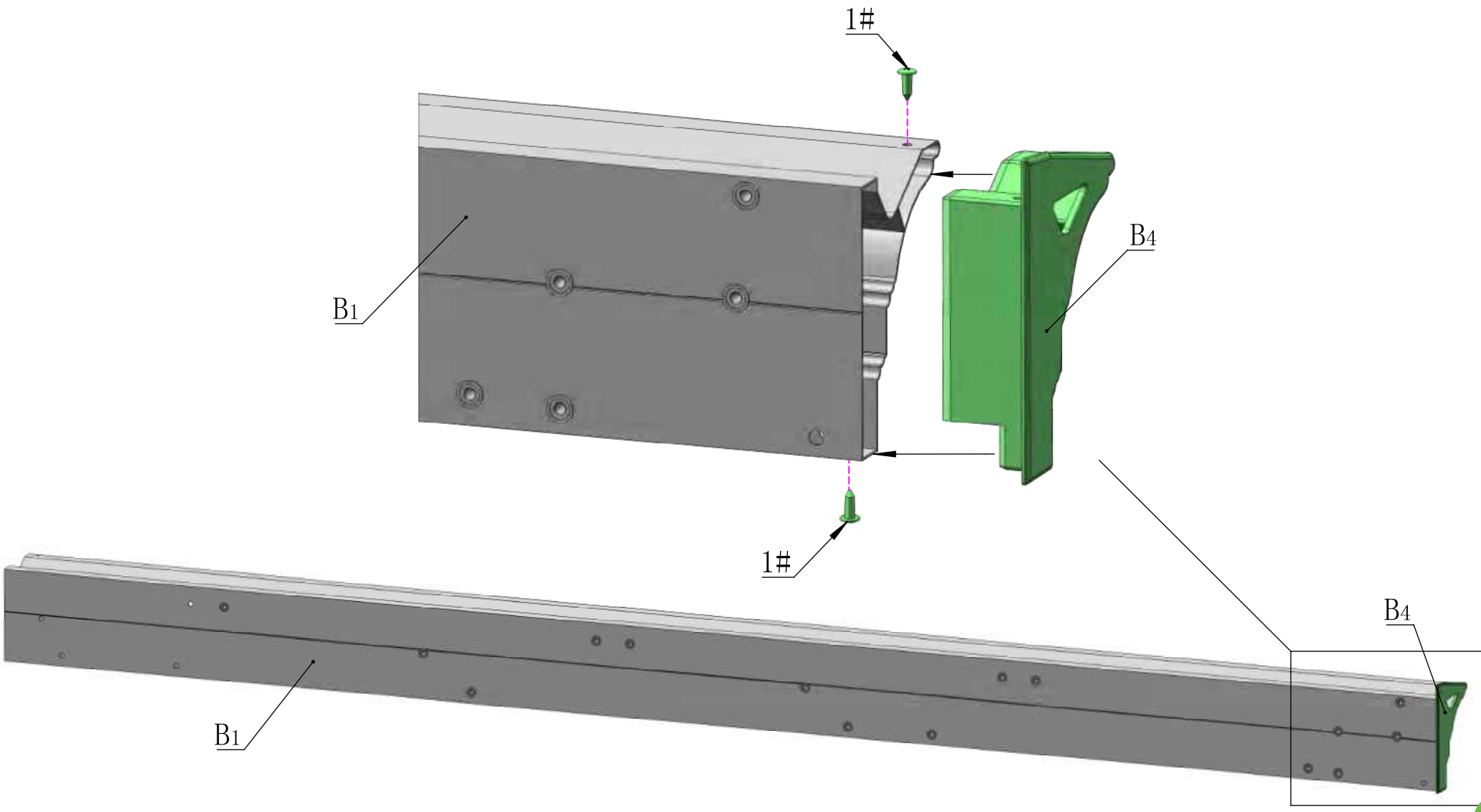



B6 1X



4# 2X

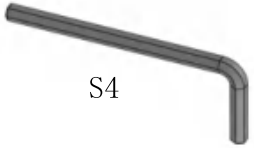

16# 1X

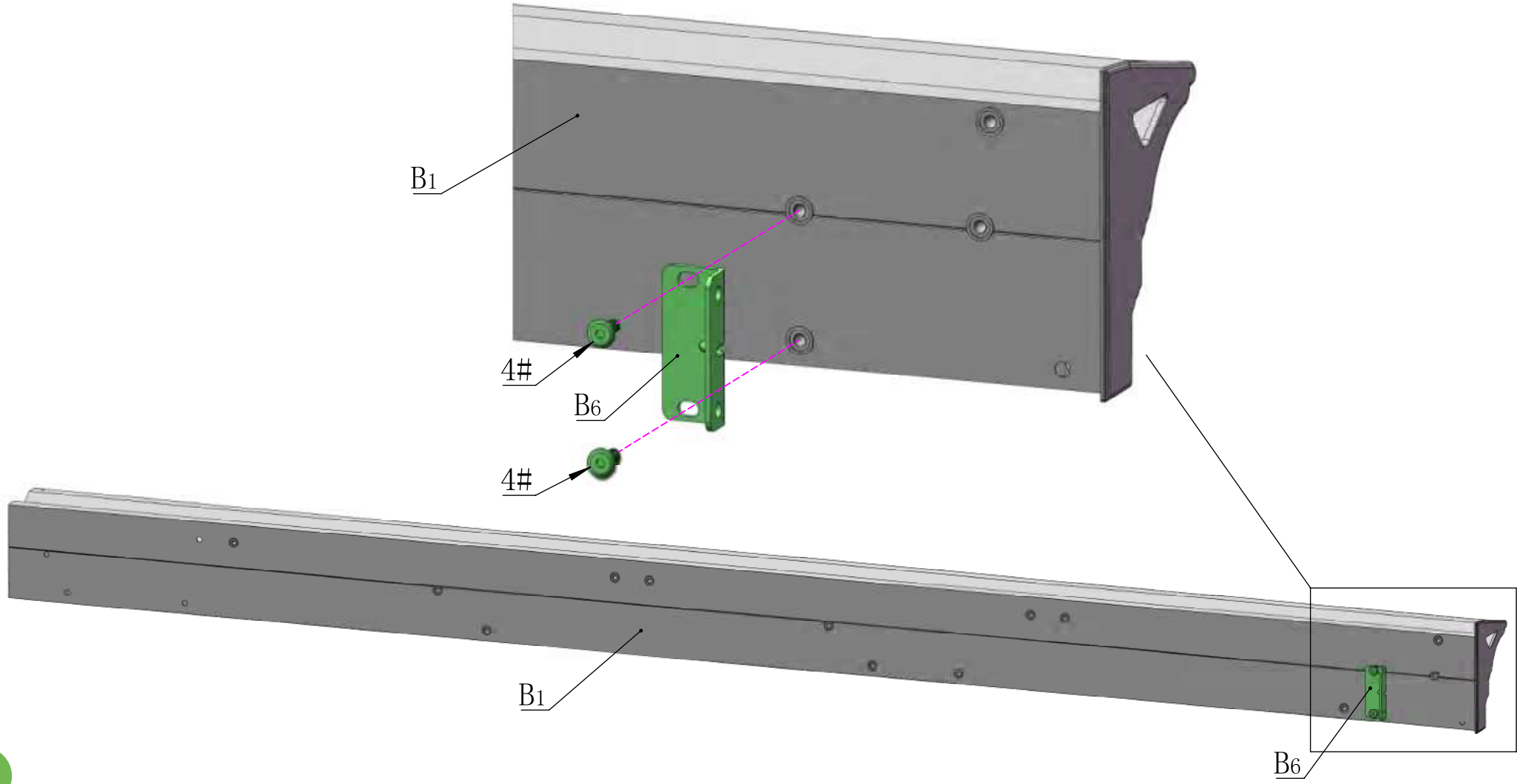



B2 1X



B5 1X



1# 2X

ST4.8*13

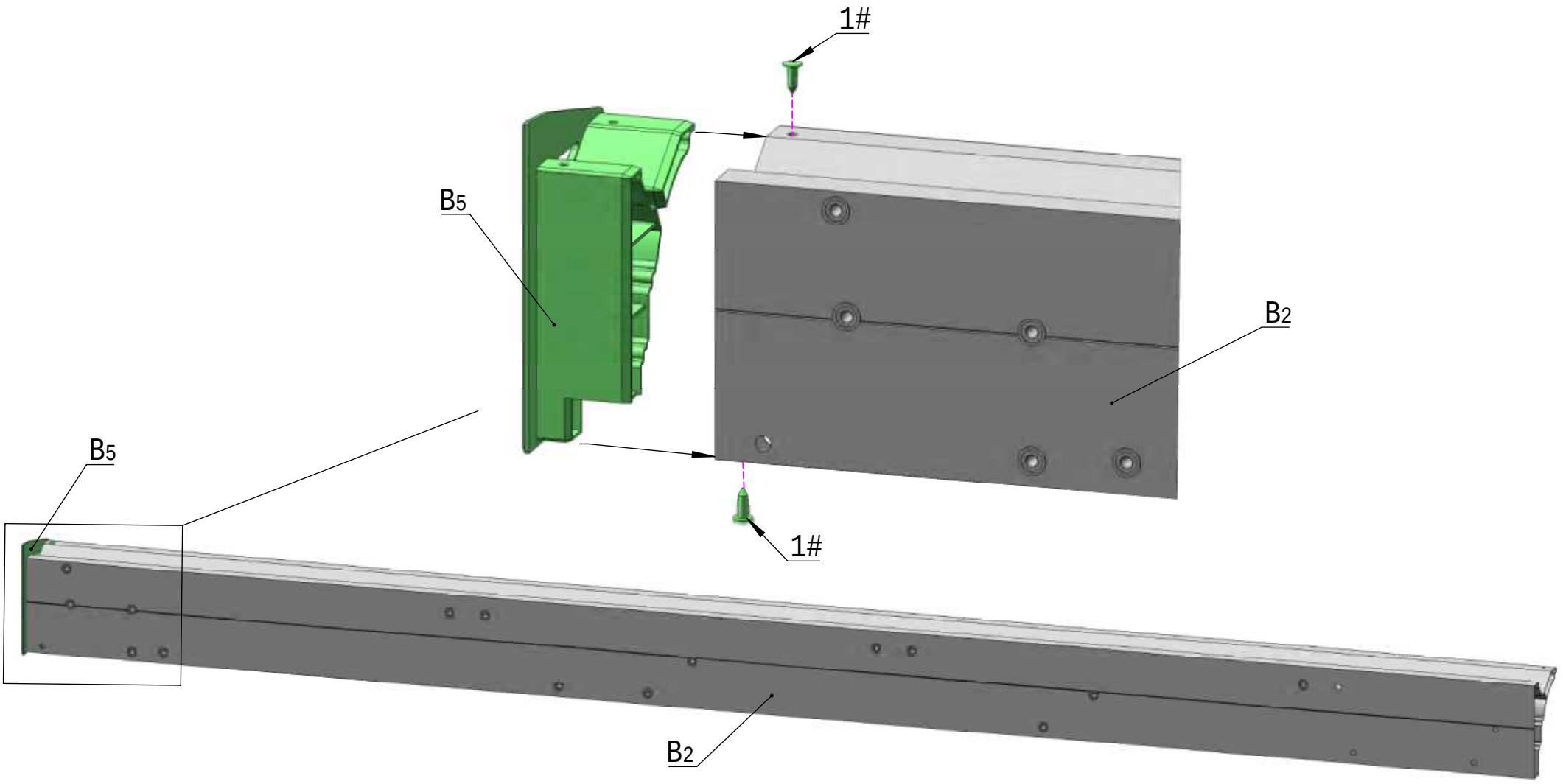



B6 1X



4# 2X



16# 1X

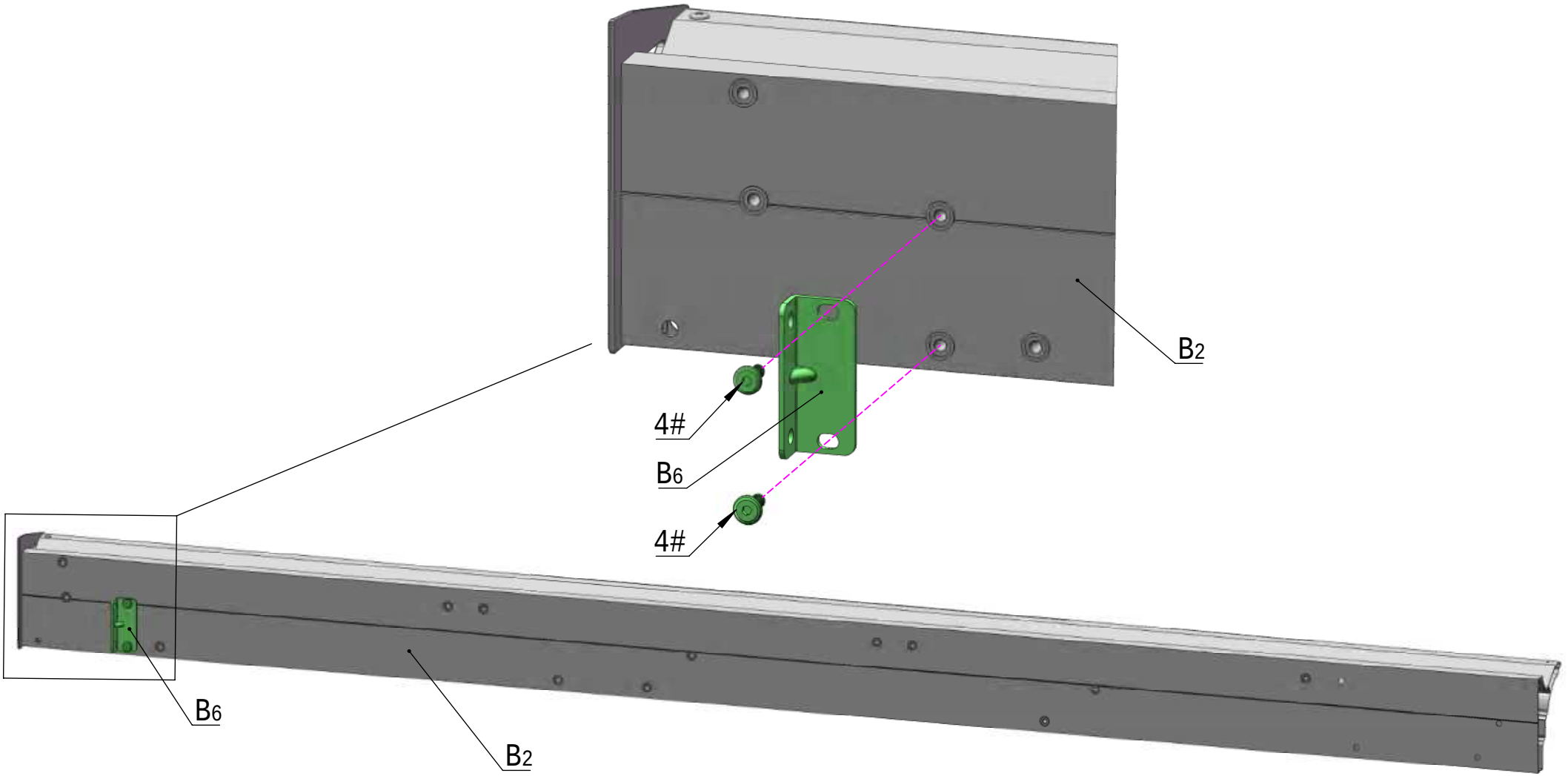

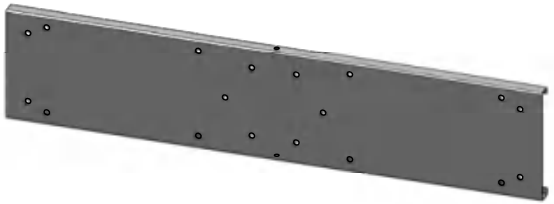

B3 1X



4# 4X

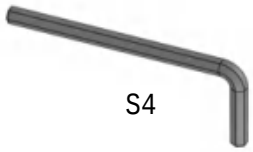

16# 1X

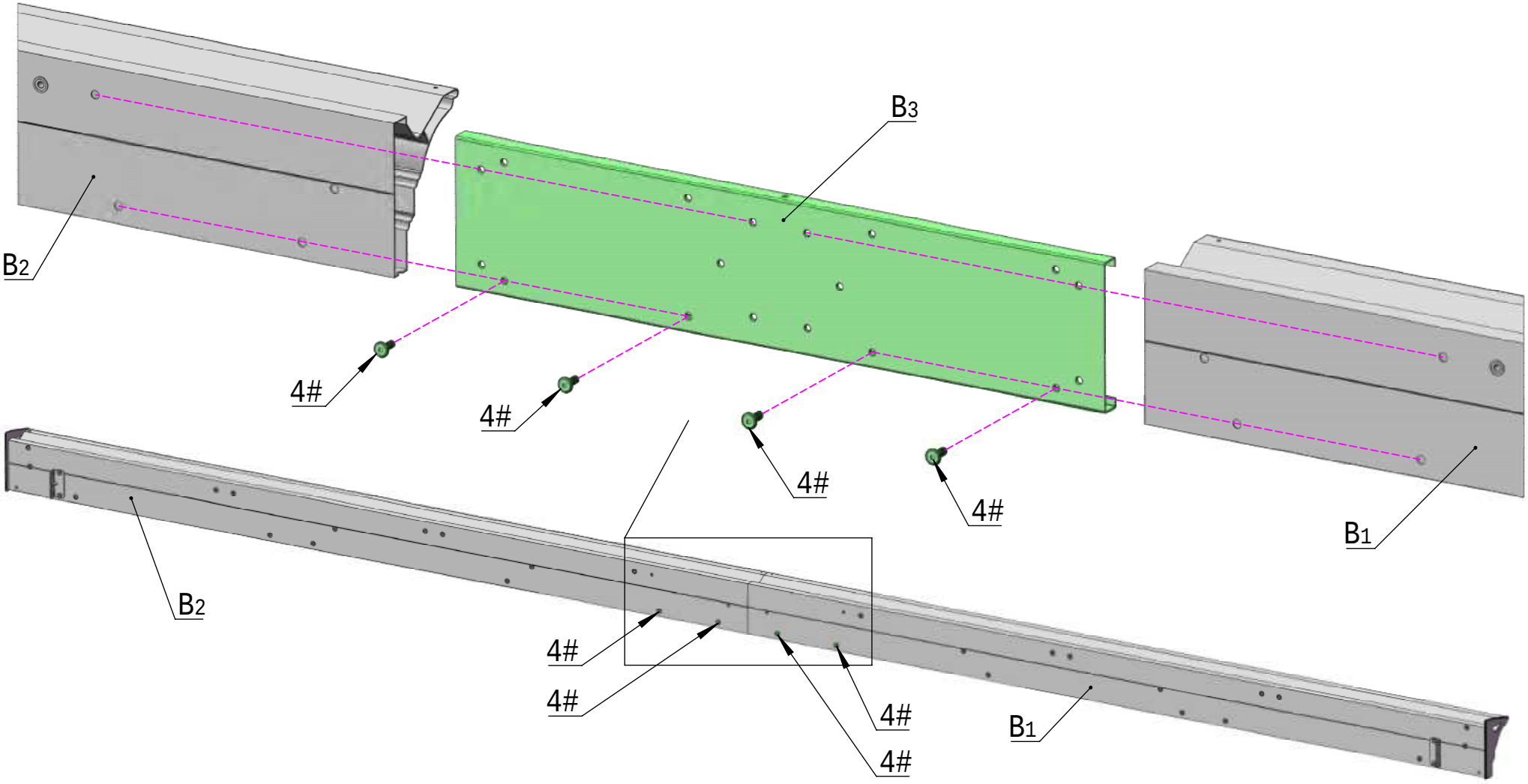



B8 6X 4# 12X 16# 1X

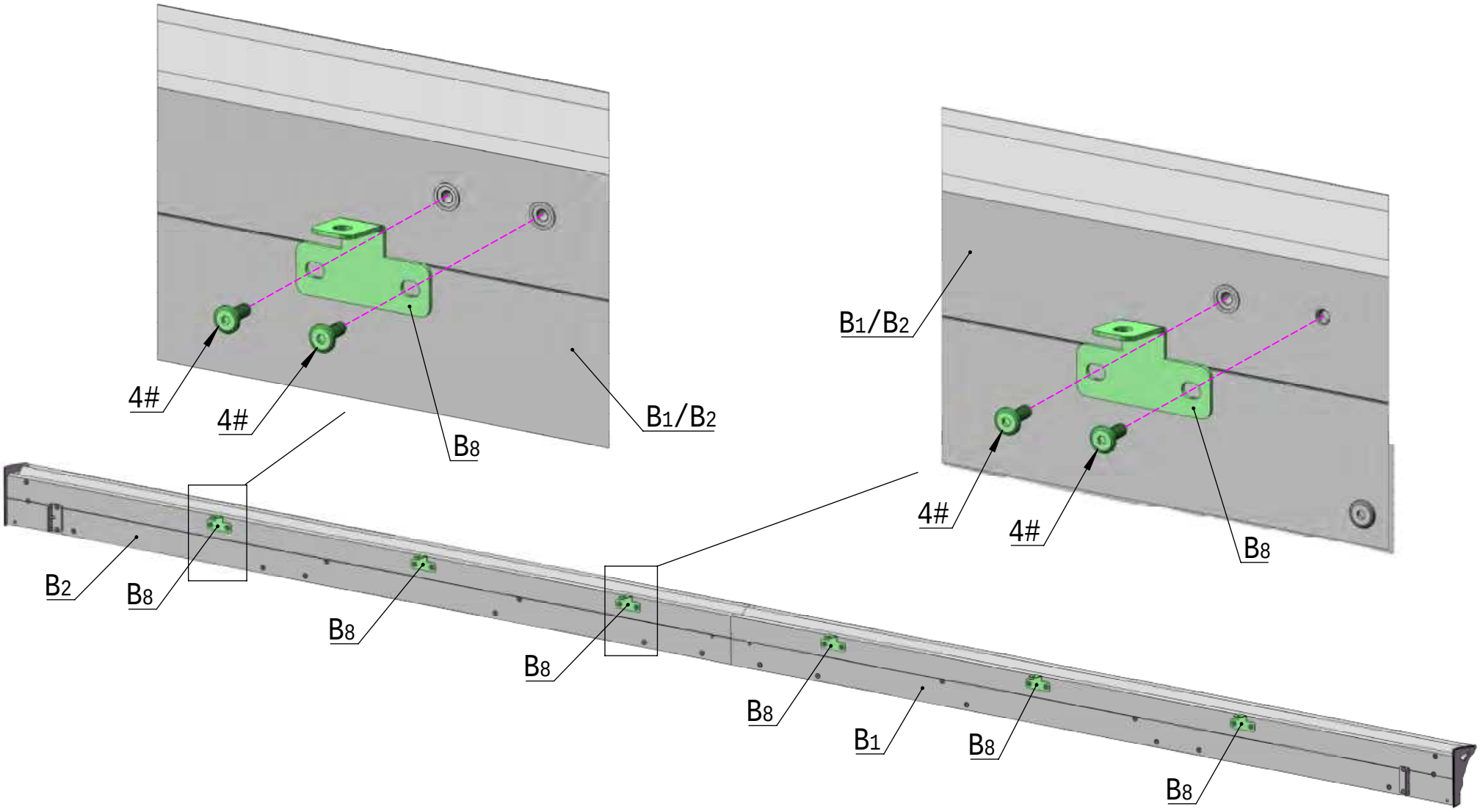



15# 1X

Use silicone sealant (part #15) to affix the gap between the two beams

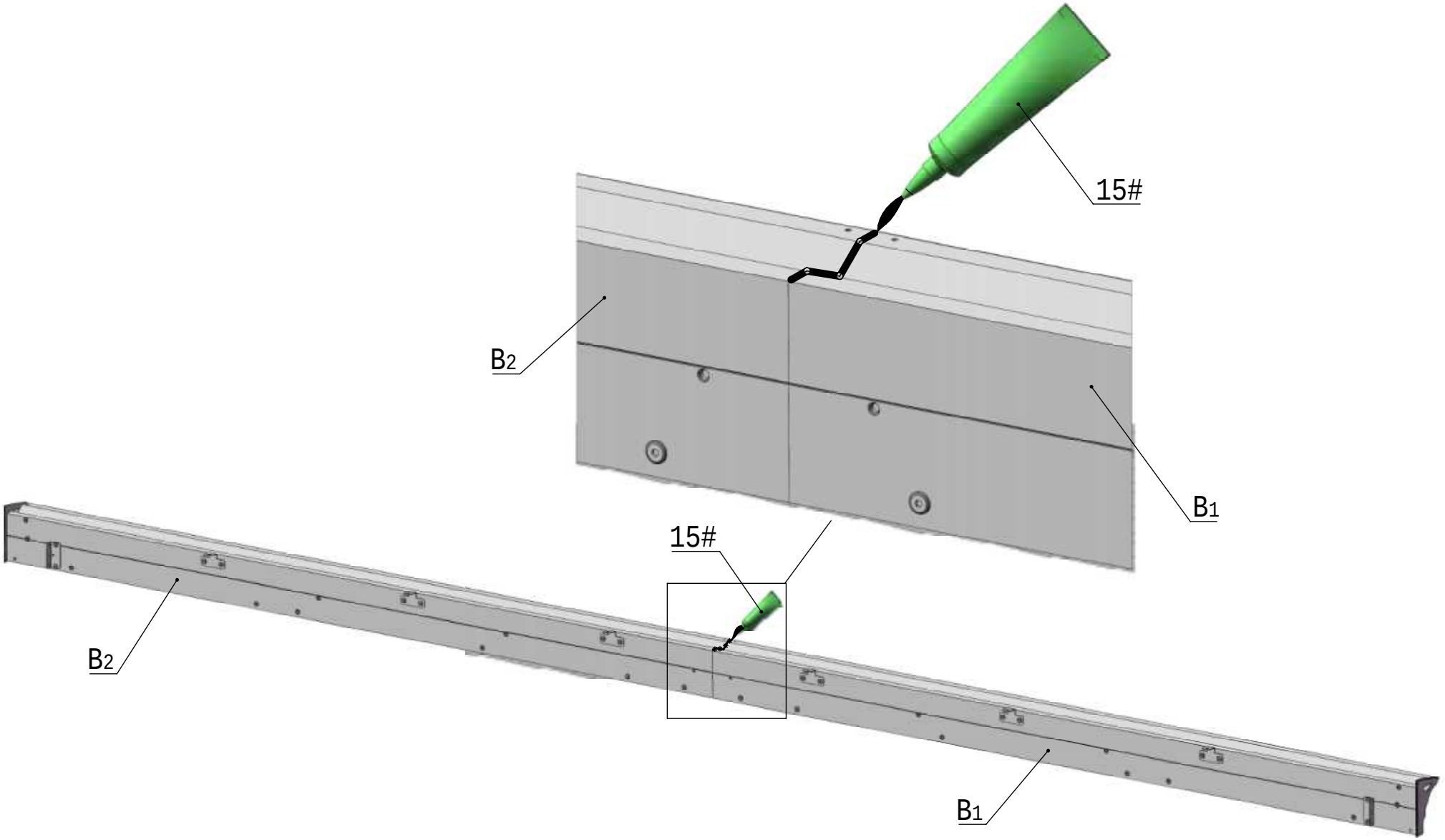



B7 1X



ST4.8*13

1# 2X



M5*12

2# 1X



S4

16# 1X

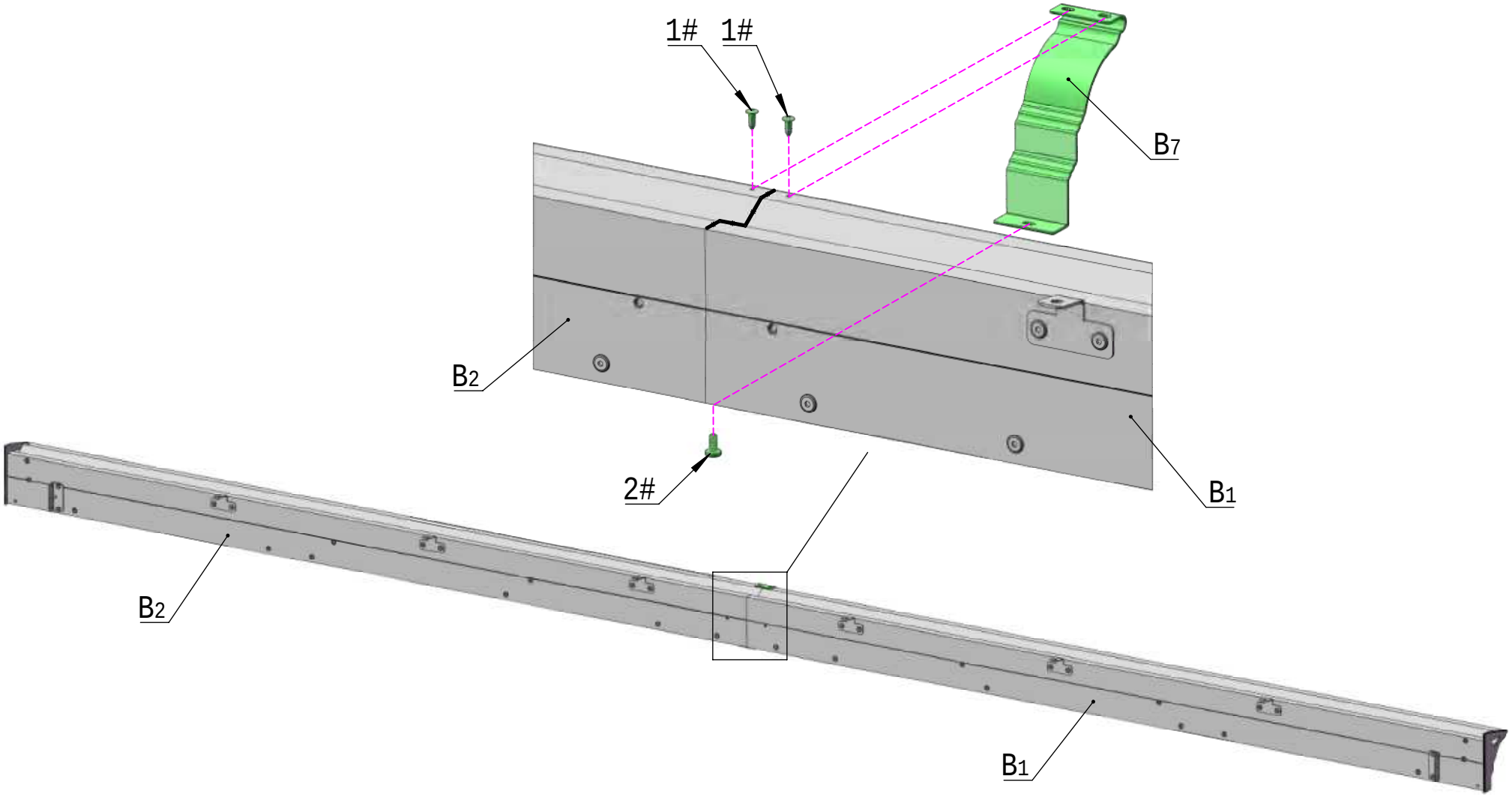

Side Beam Assembly

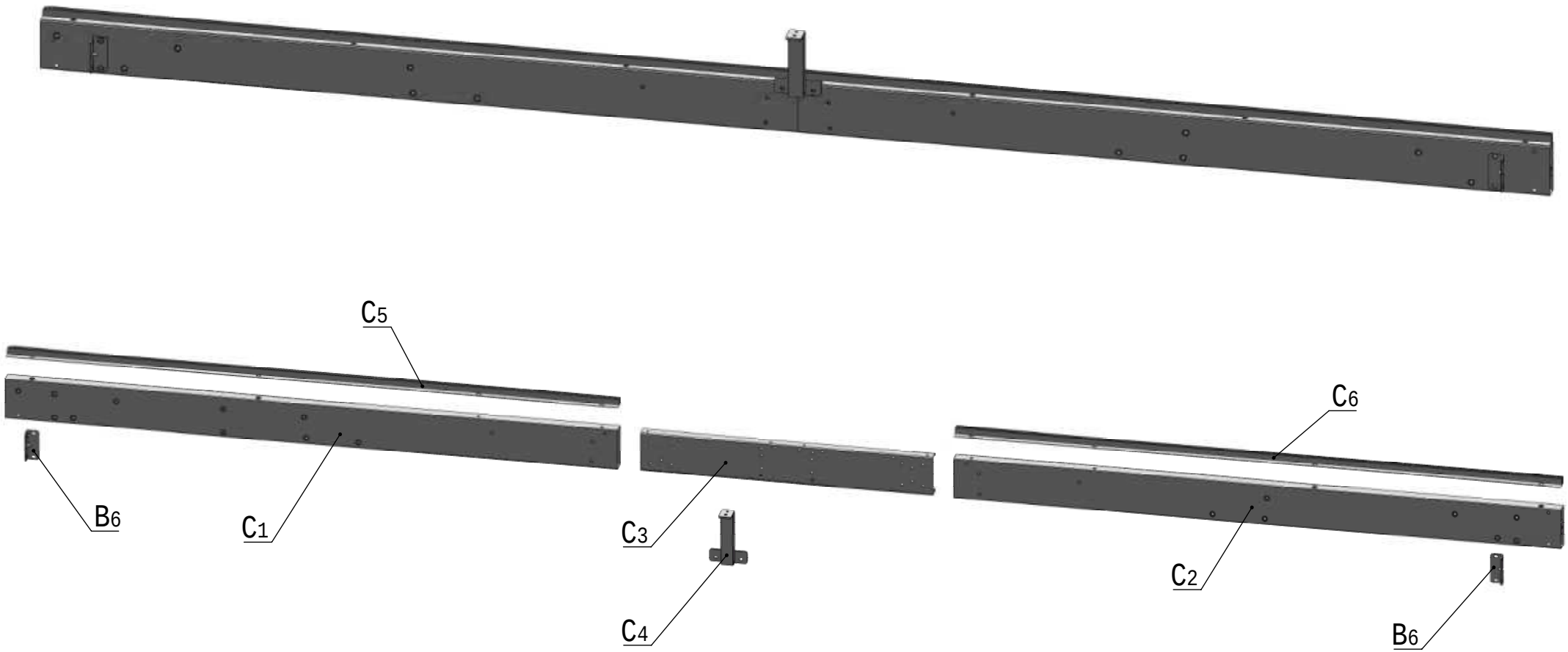

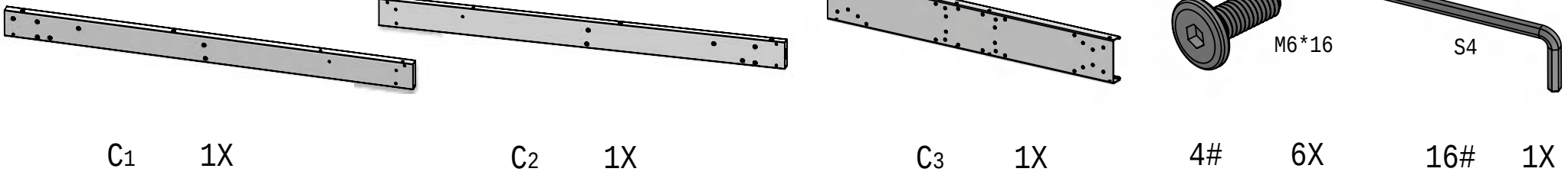

C1 1X C2 1X C3 1X 4# 6X 16# 1X

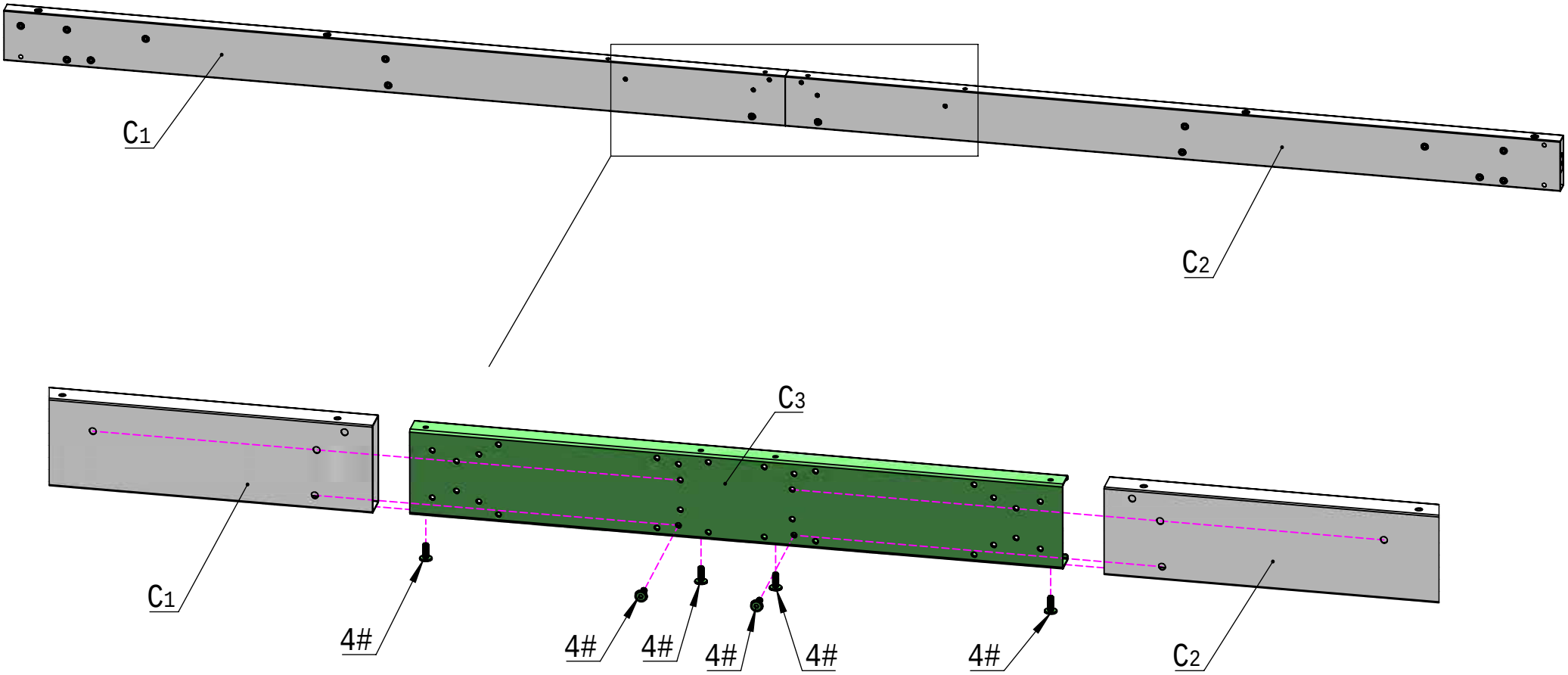

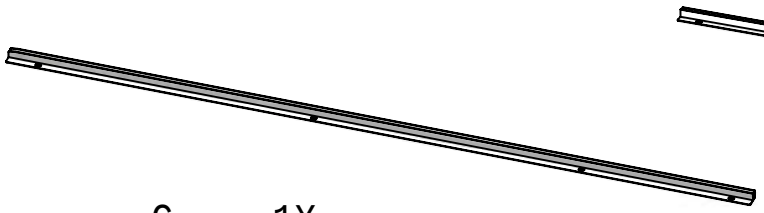

C5 1X

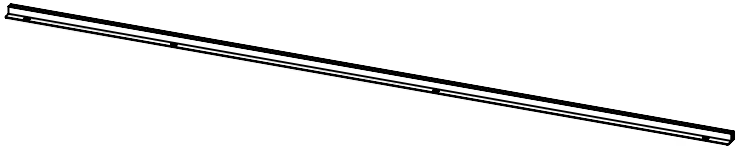

C6 1X

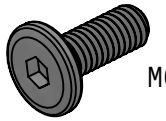

4# 8X

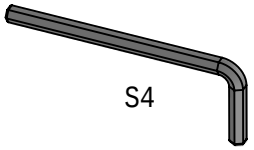

16# 1X

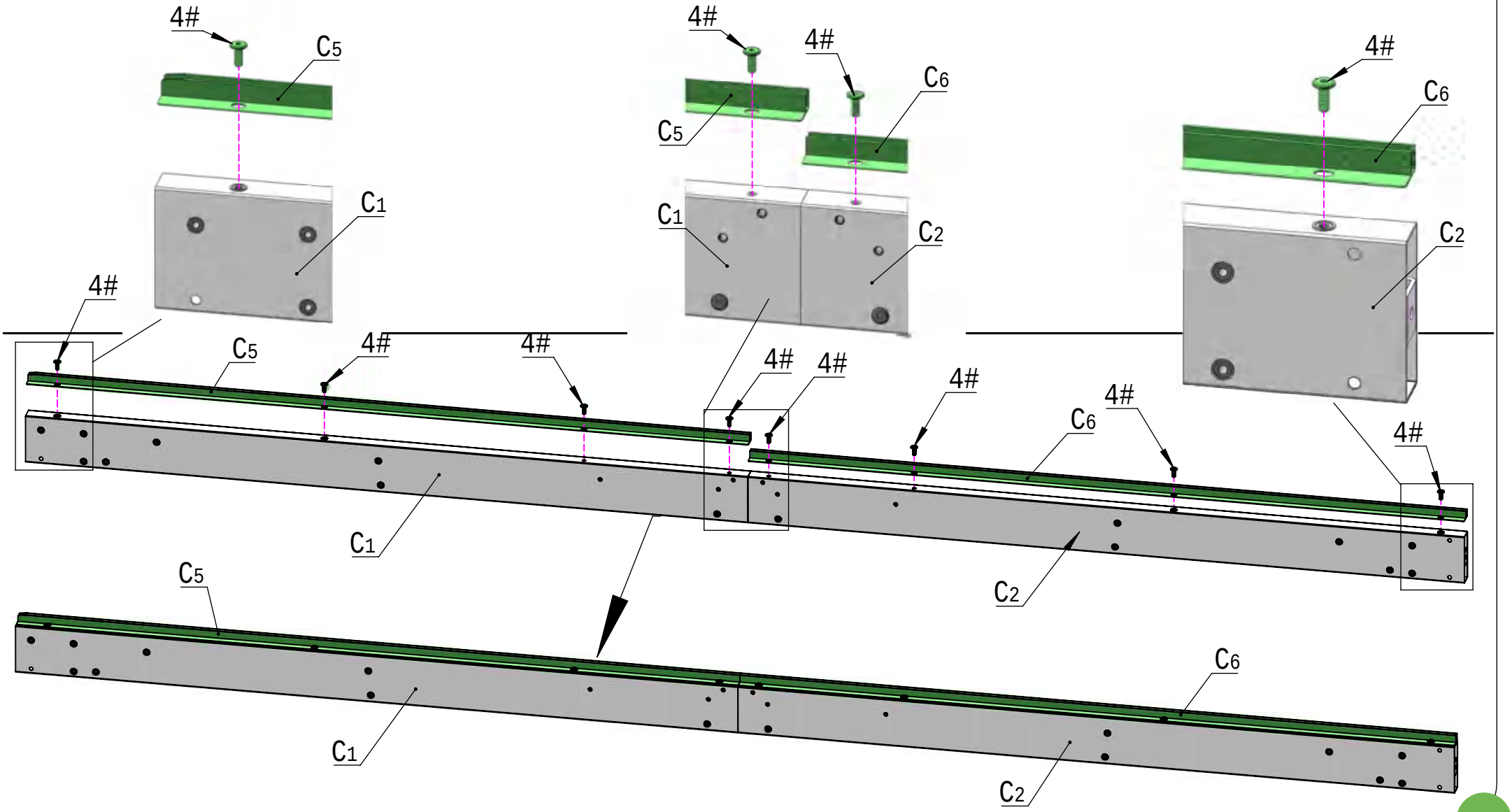

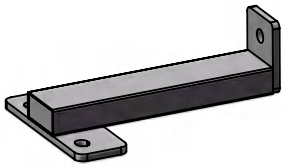

C4 1X

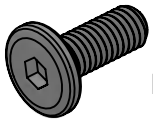

4# 2X

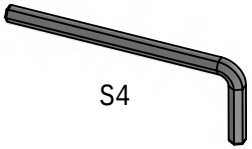

16# 1X

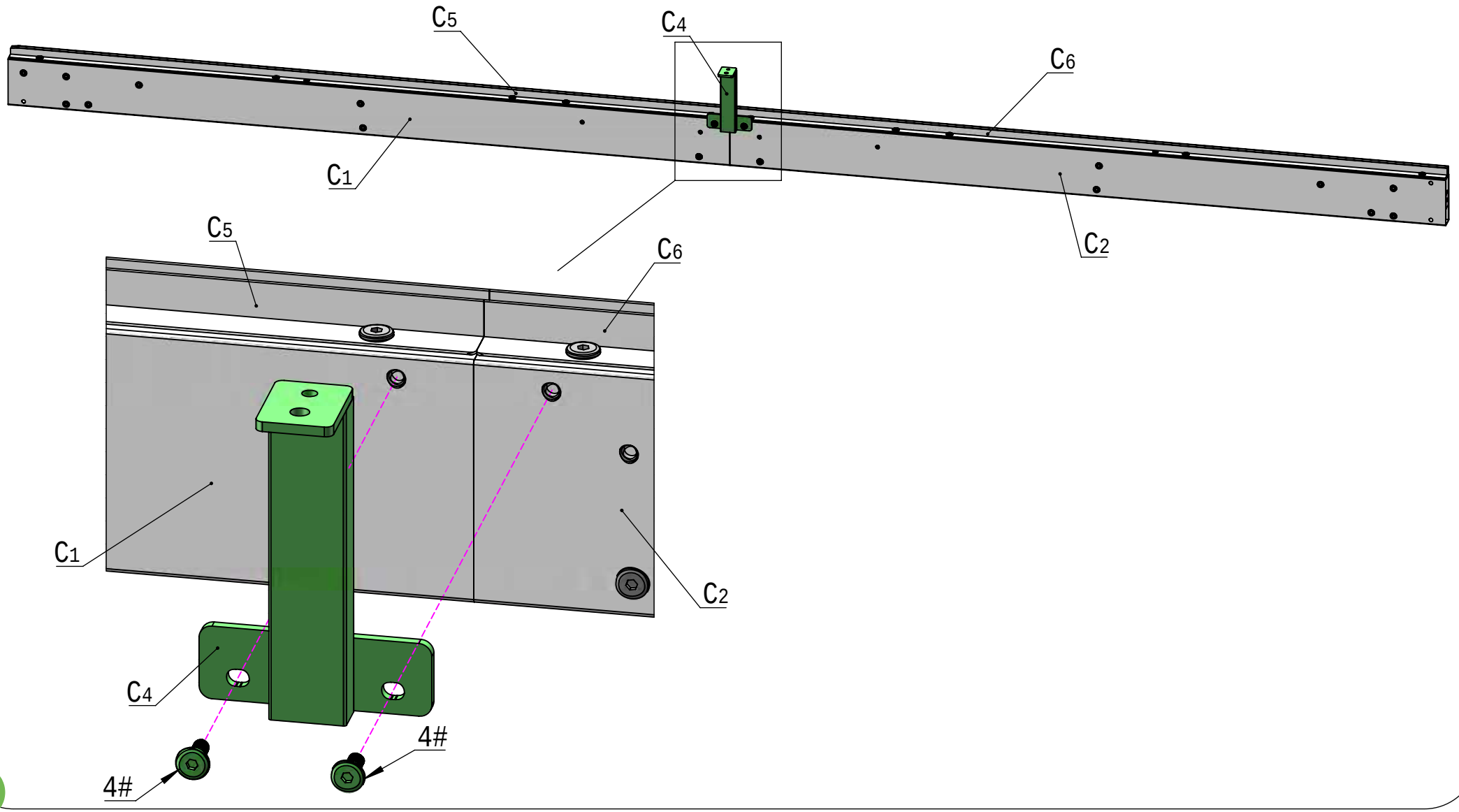



B6 2X



4# 4X



16# 1X

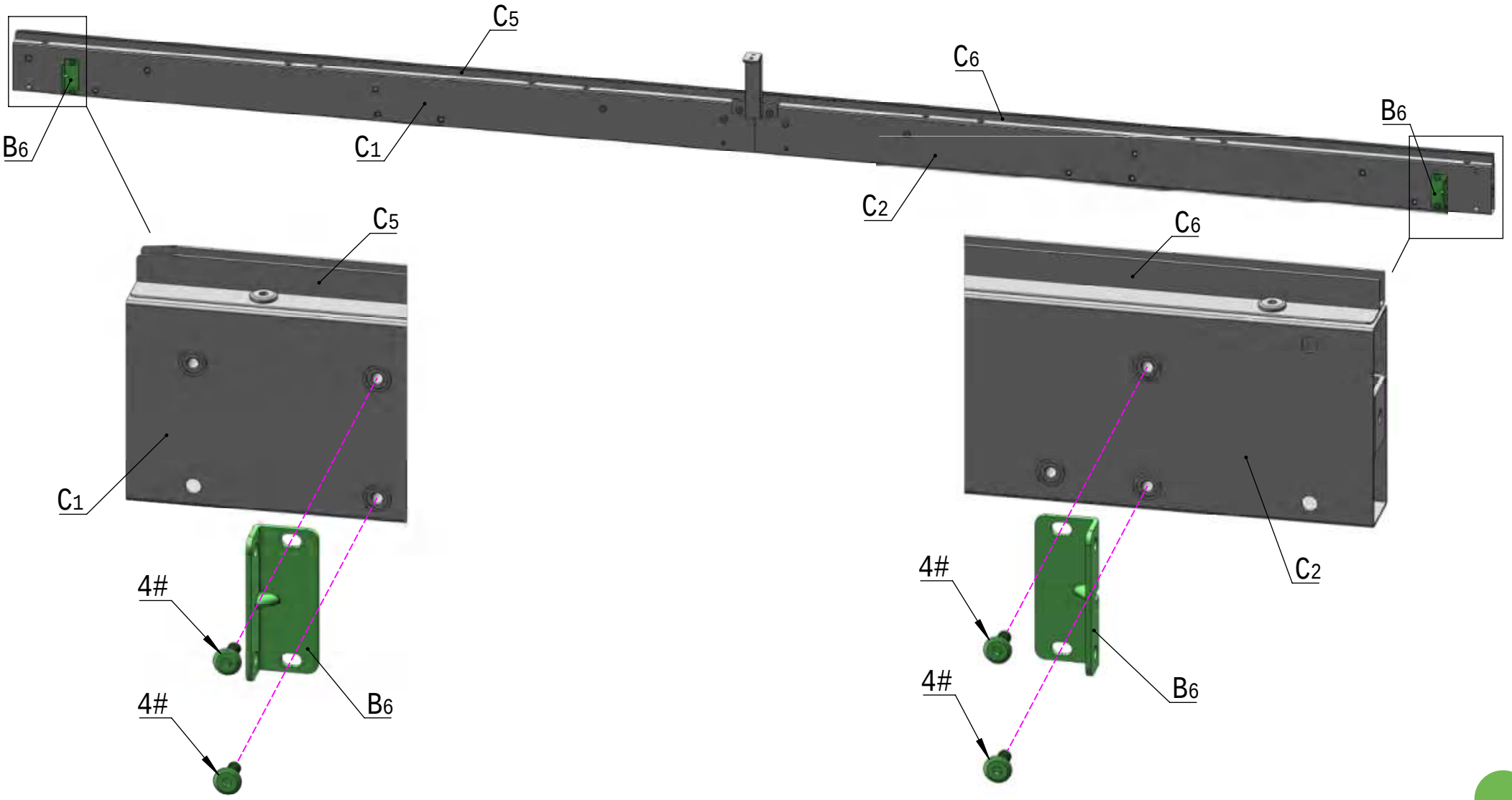

Side Beam Assembly

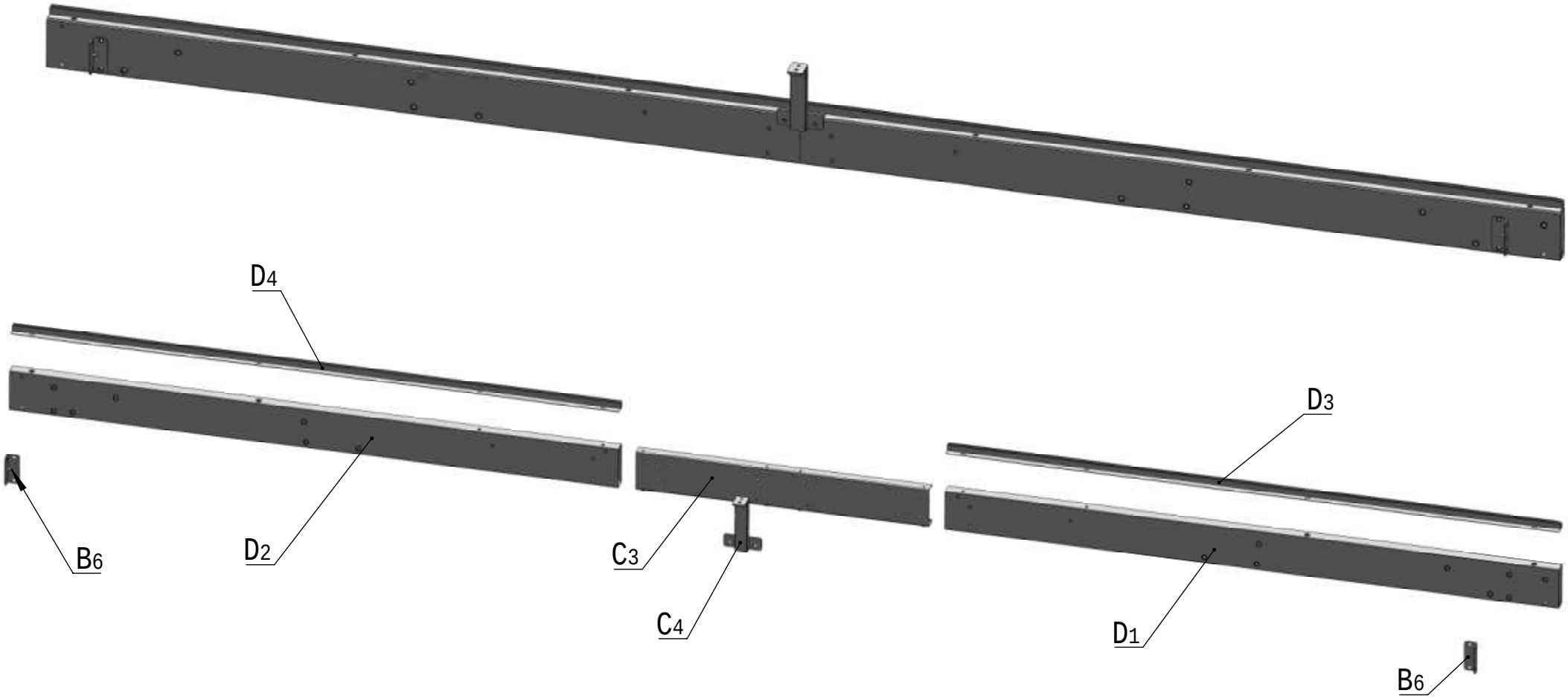

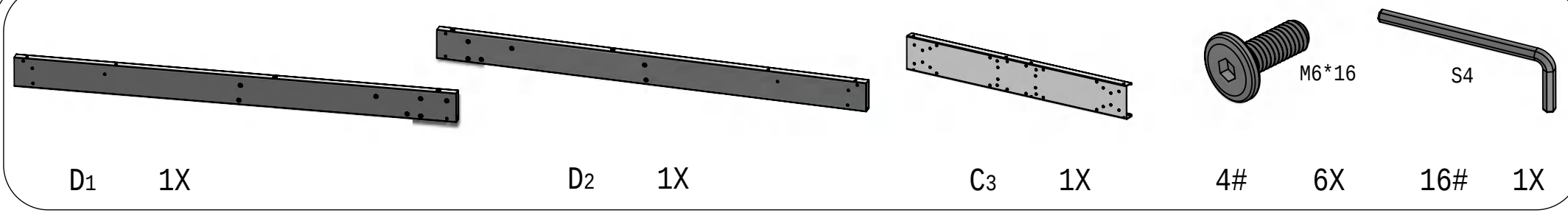

D1 1X D2 1X C3 1X 4# 6X 16# 1X

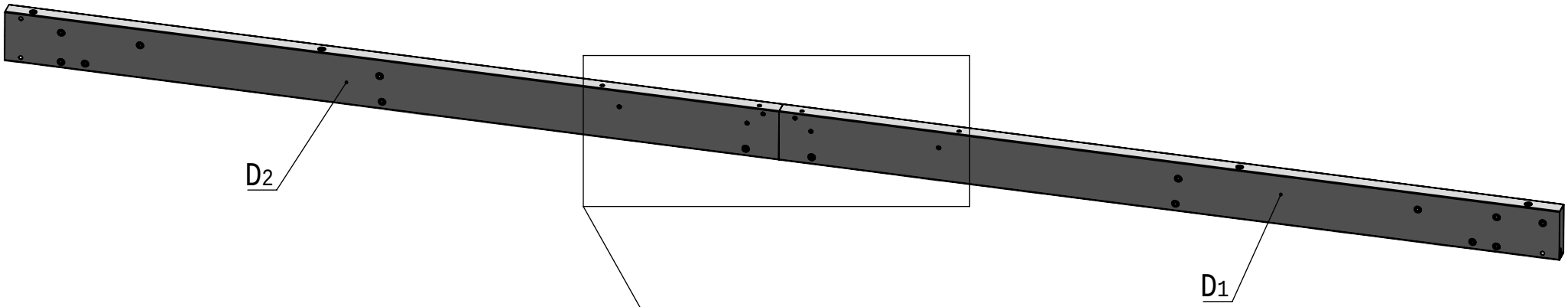

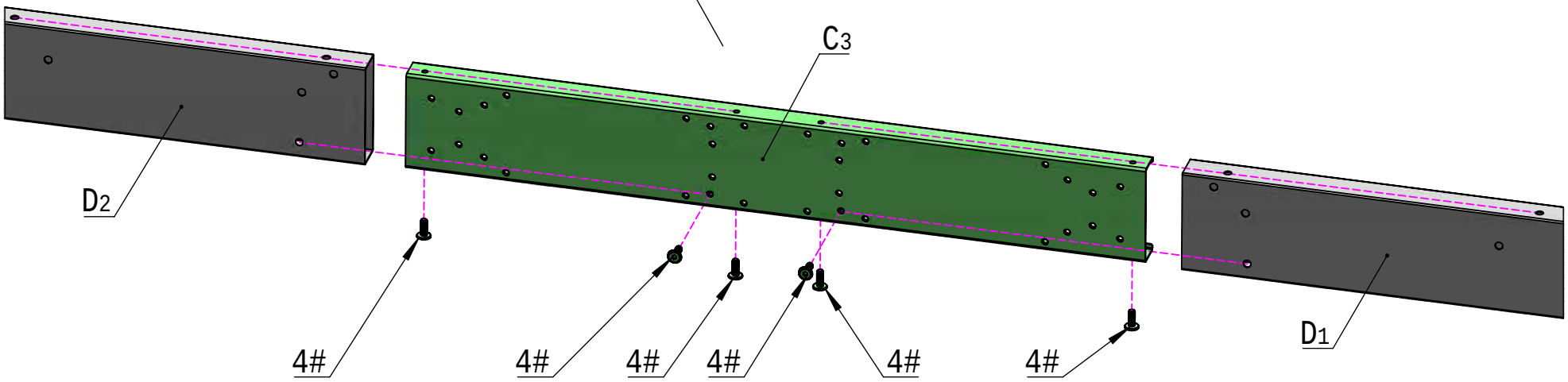

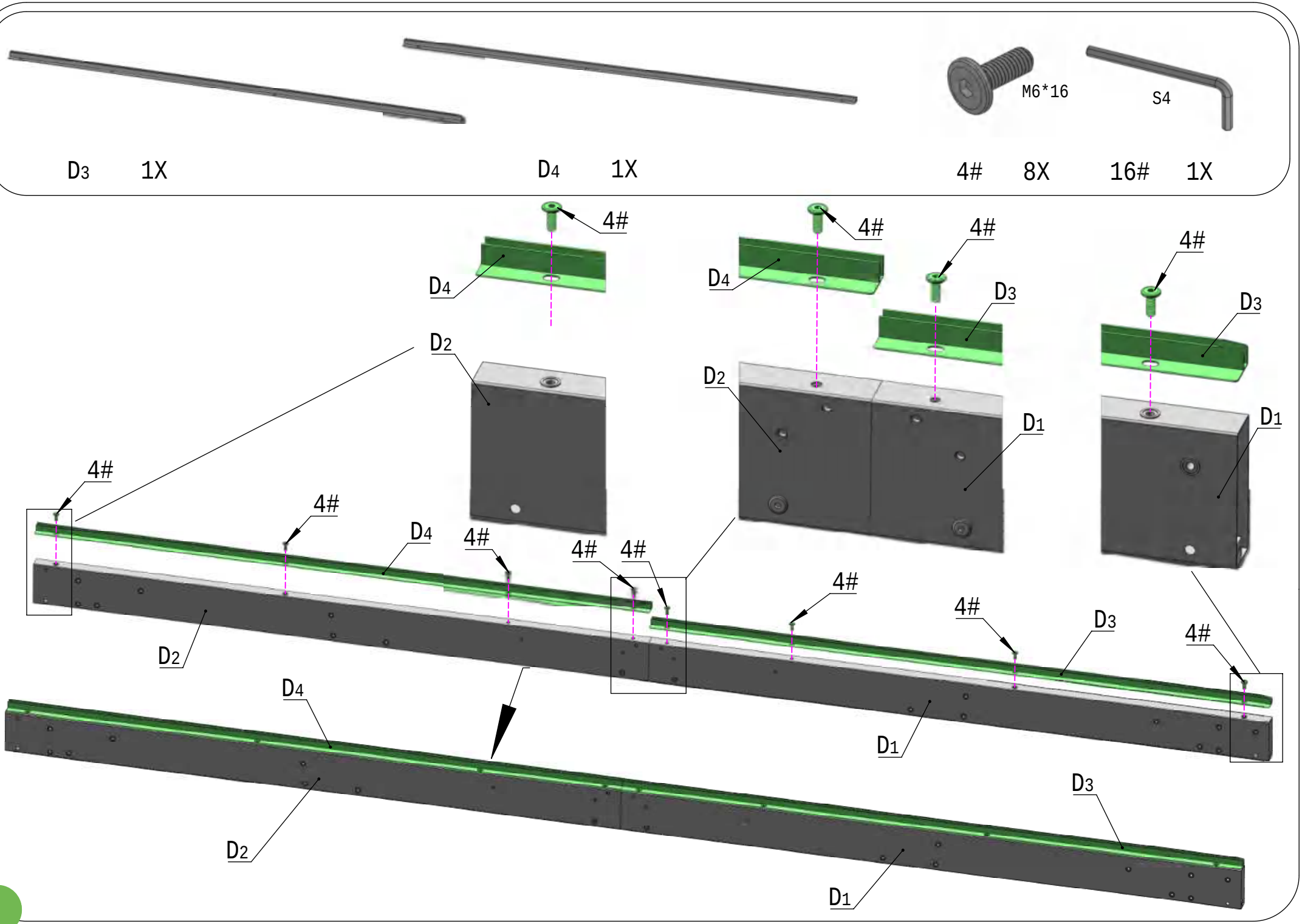
M6*16
S4
D3 1X
D4 1X
4# 8X
16# 1X
4#
D4
D2
D1
D3



C4 1X



4# 2X

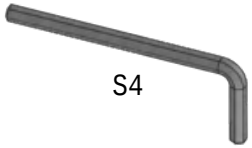

16# 1X

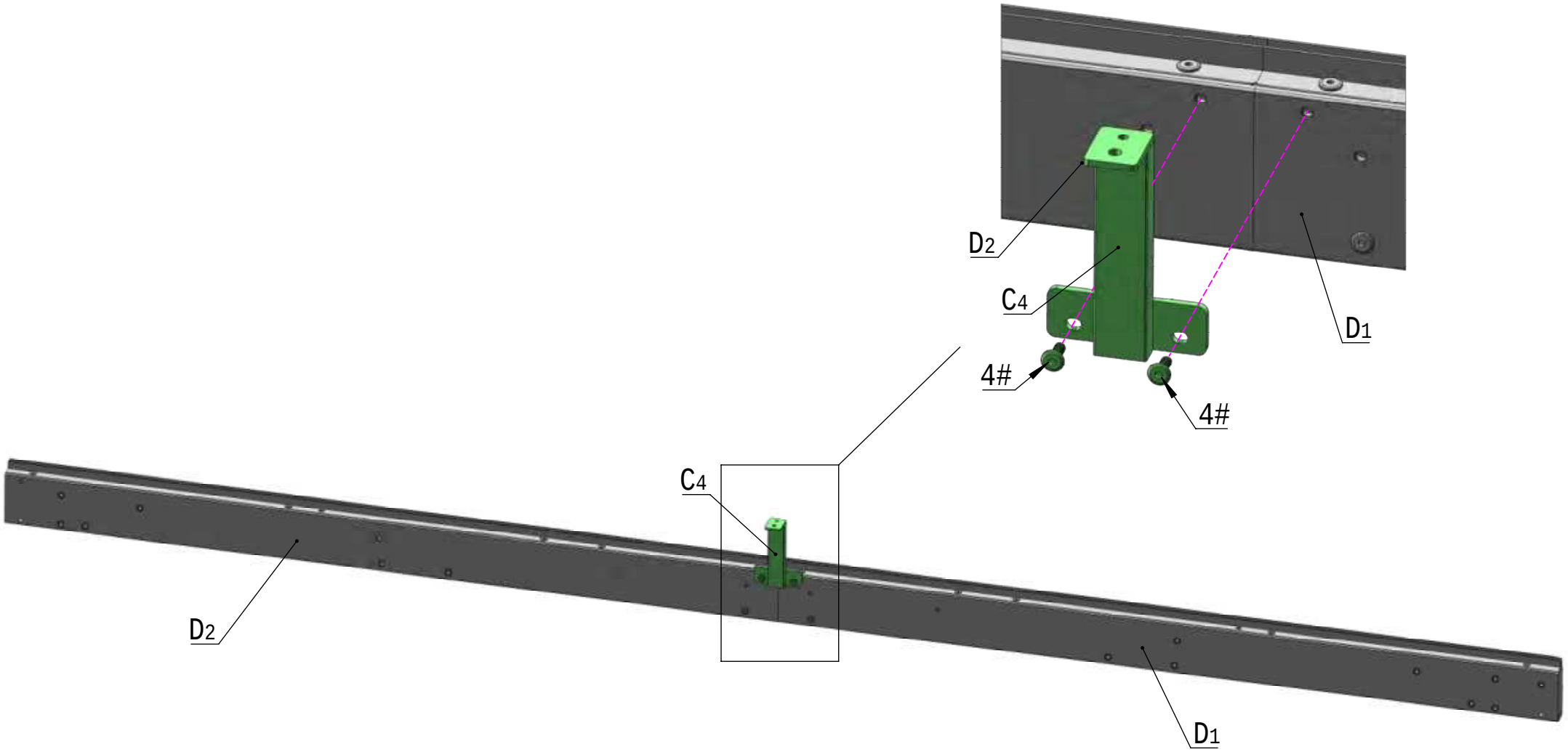



B6 2X



4# 4X



16# 1X

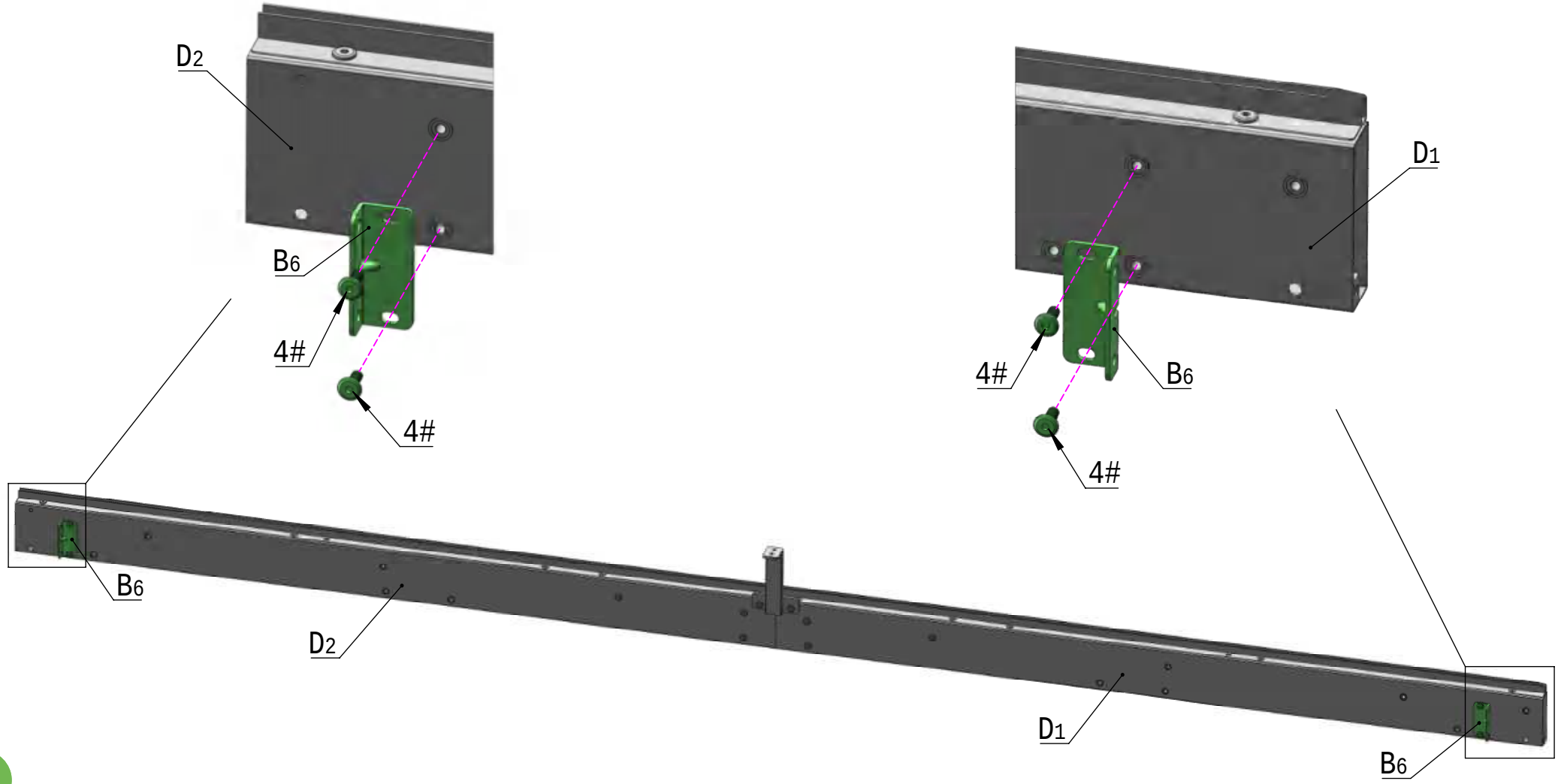

Rear Beam Assembly

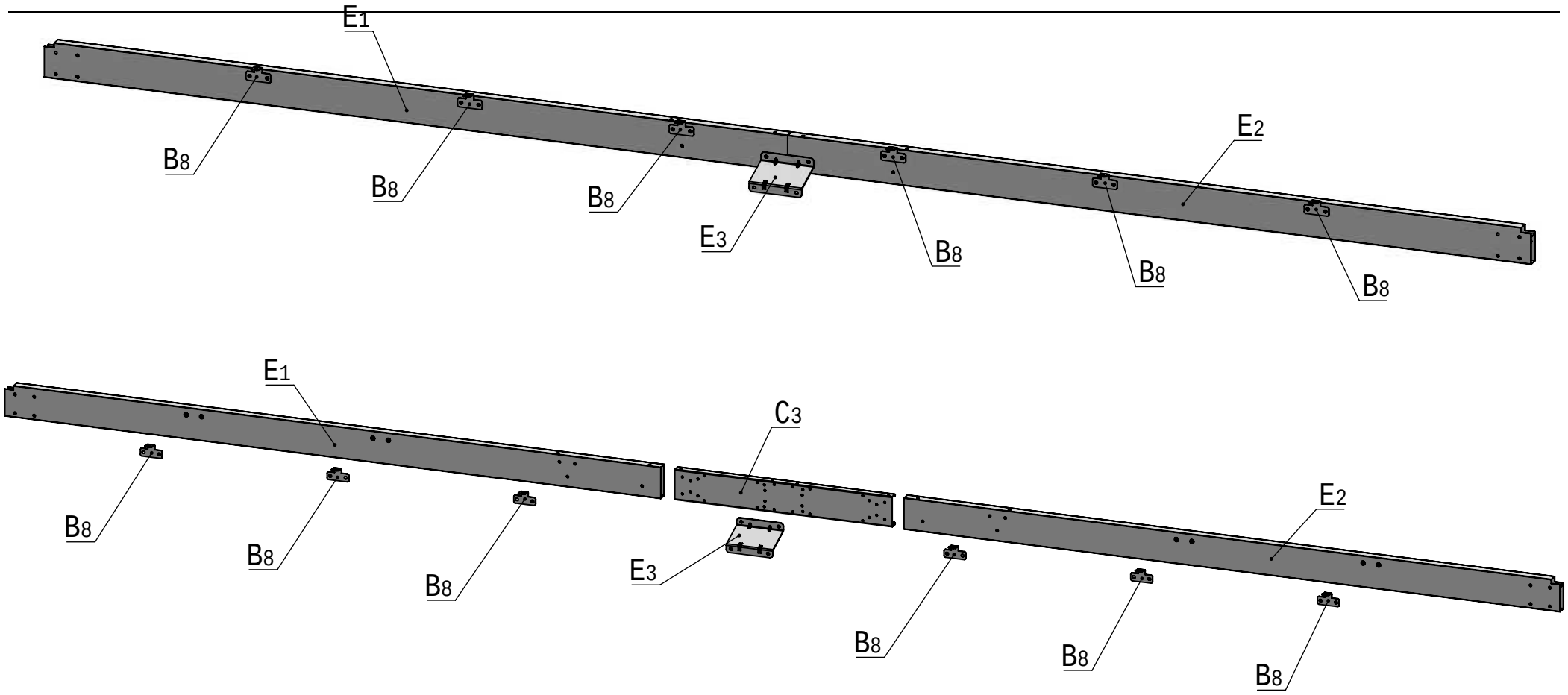

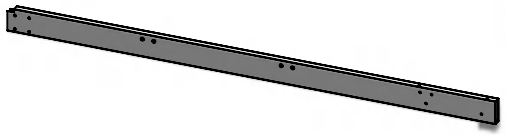

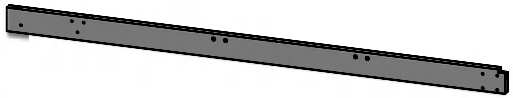

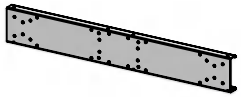

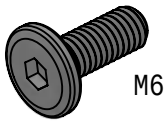

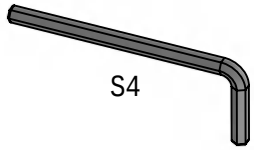

E1 1X E2 1X C3 1X 4# 10X 16# 1X

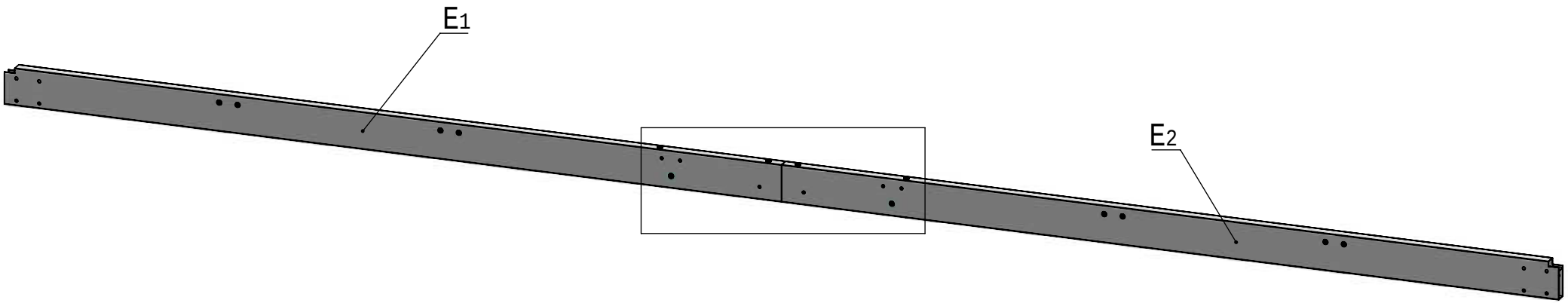

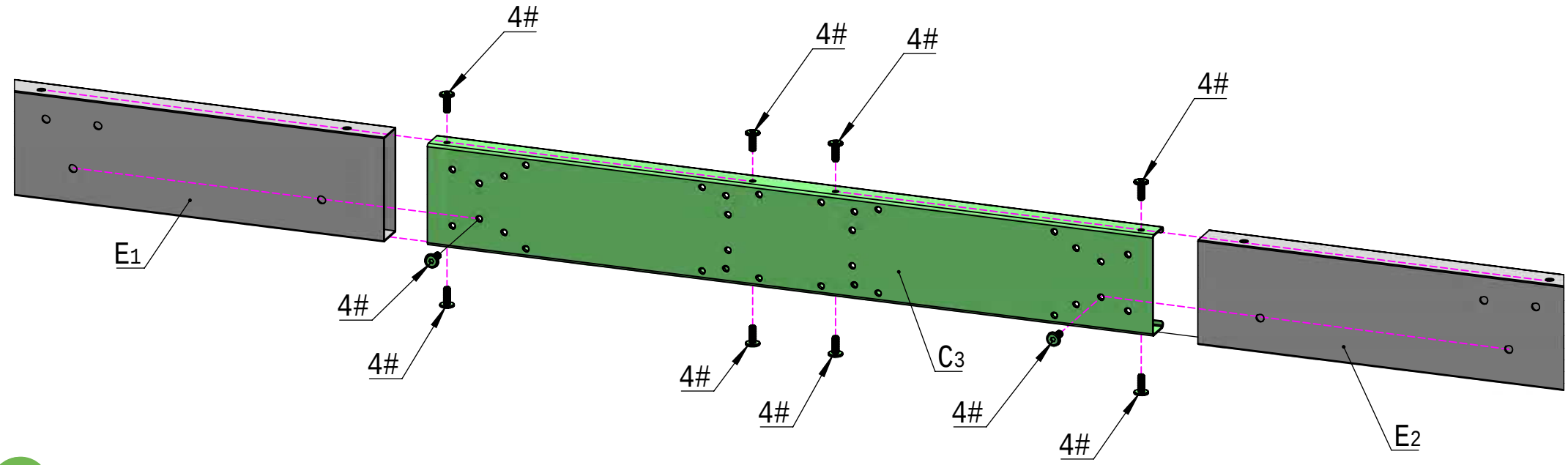

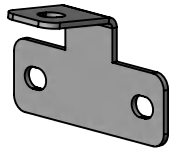

B8 6X

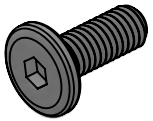

4# 12X

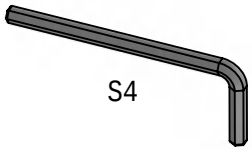

16# 1X

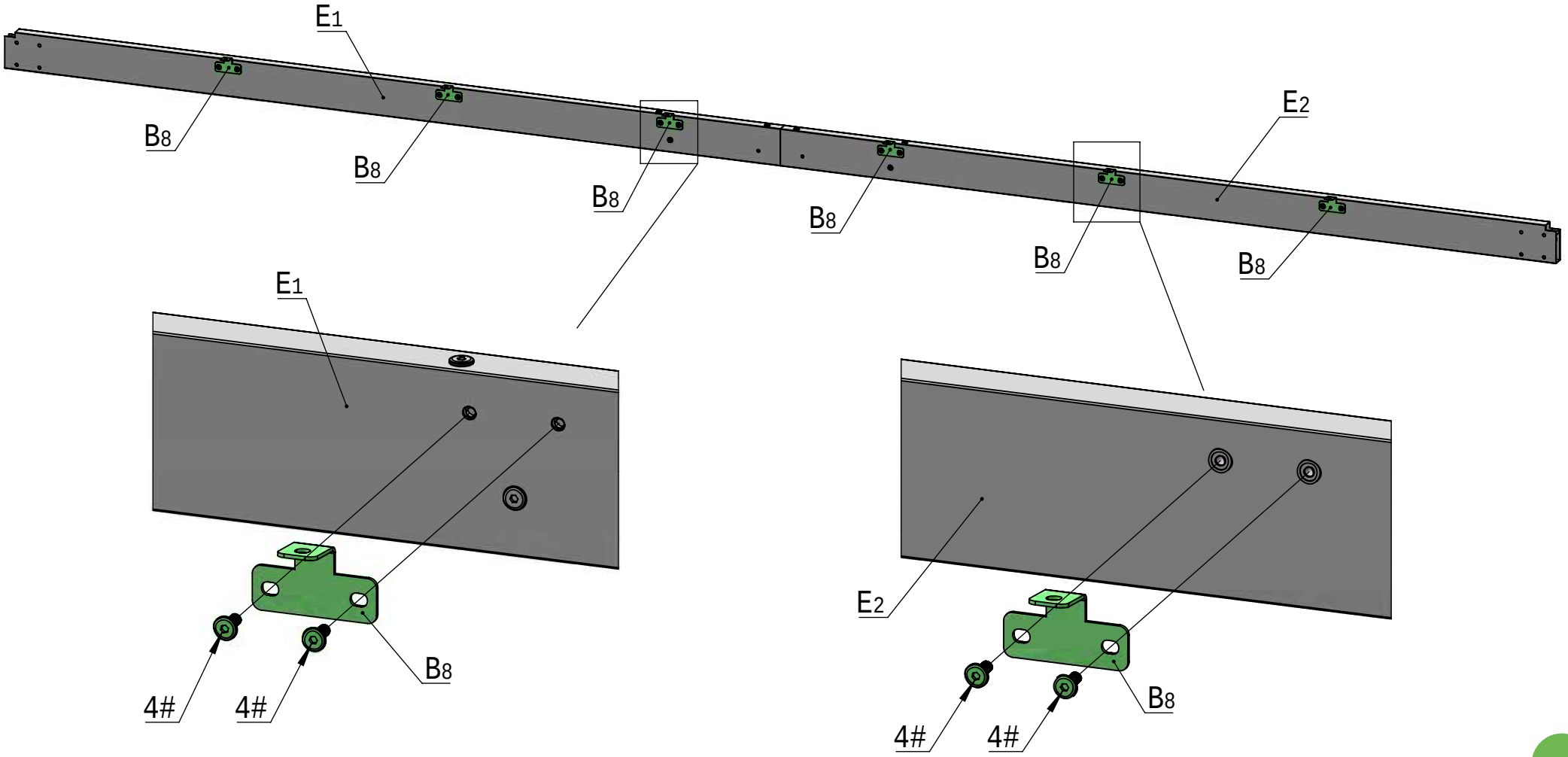

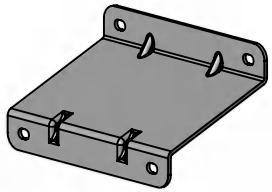

E3 1X



4# 2X

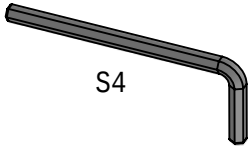

16# 1X

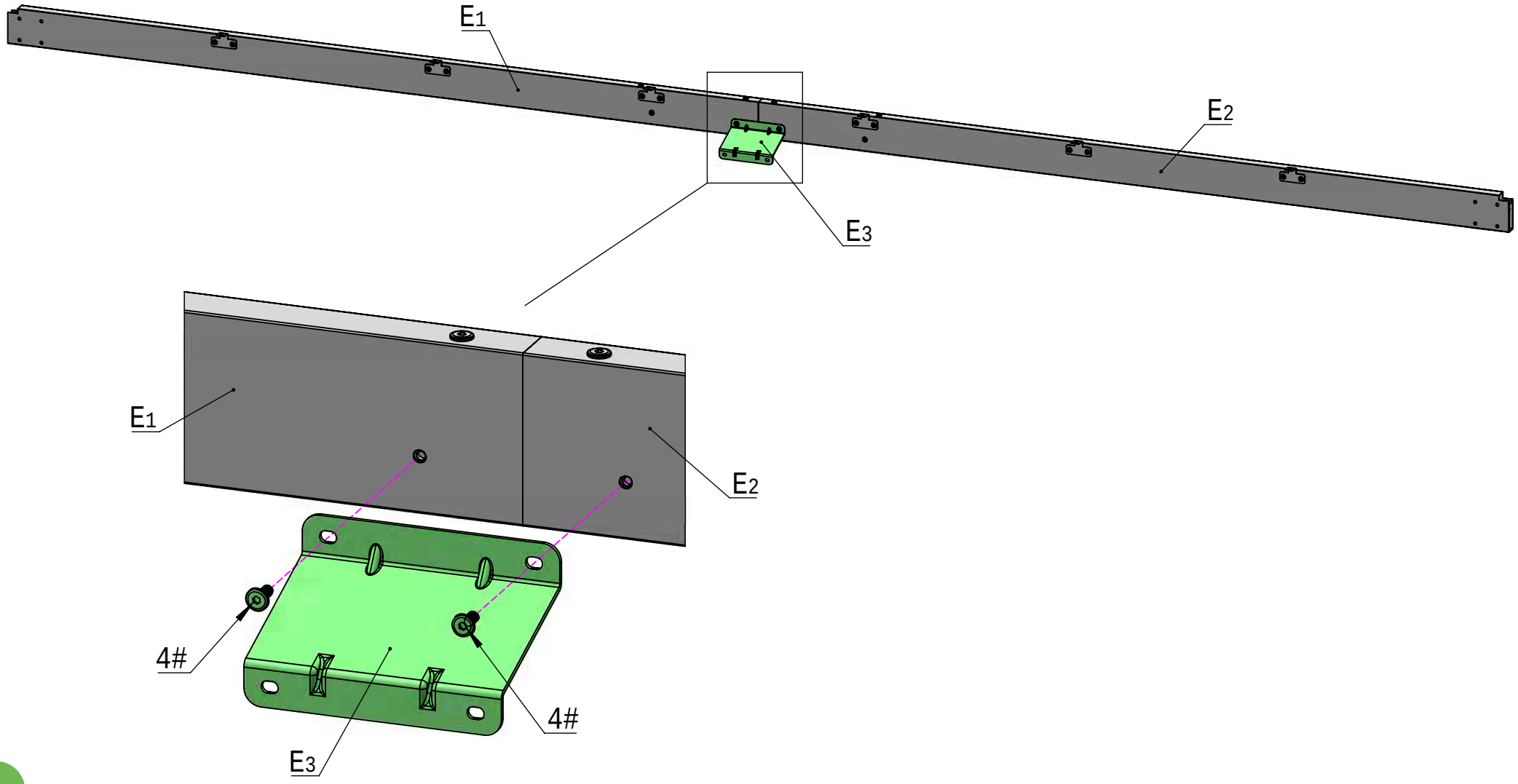

Frame Assembly

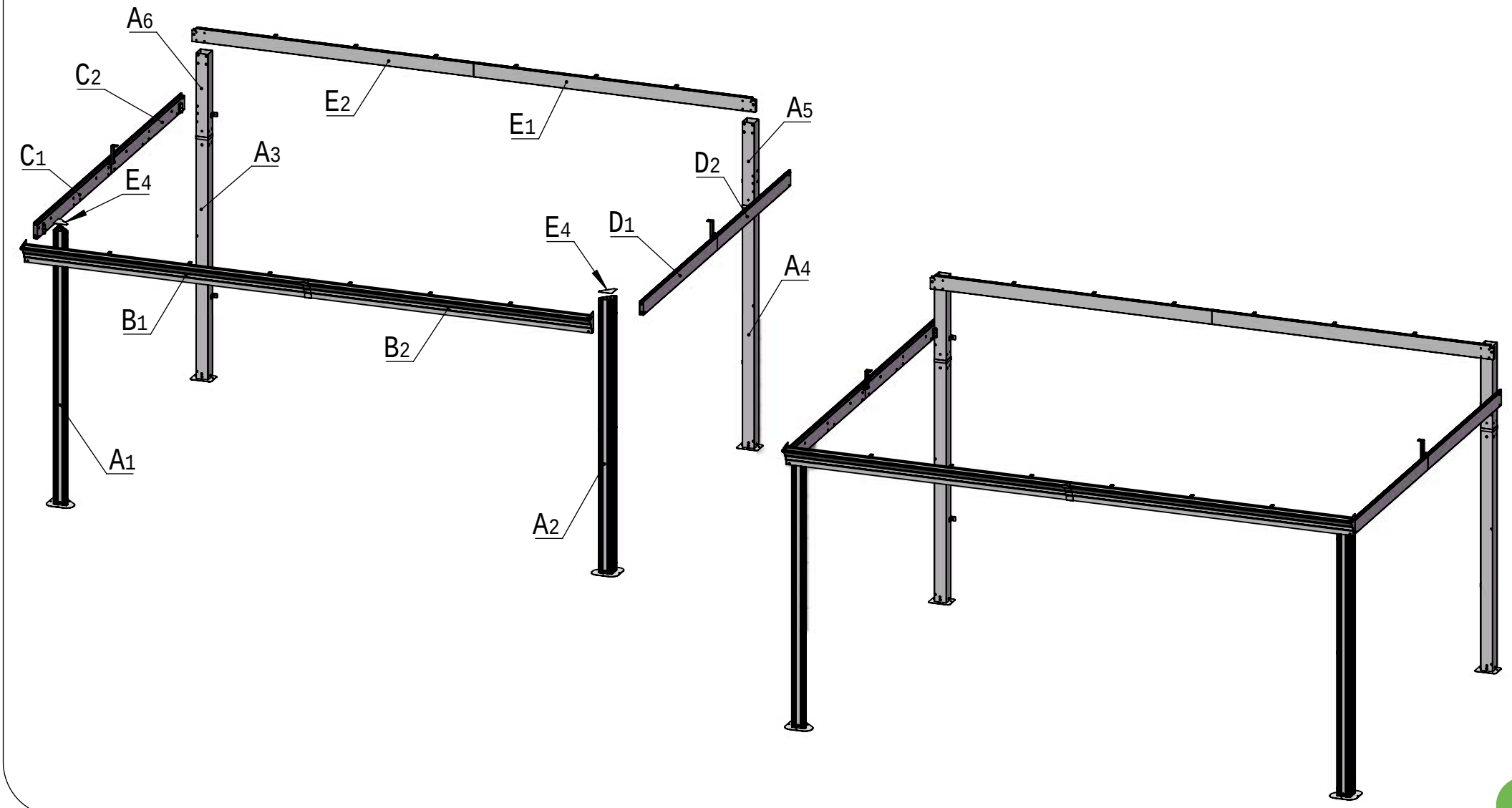

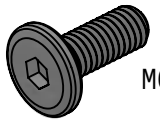

4# 6X

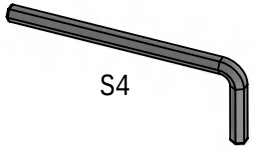

16# 1X

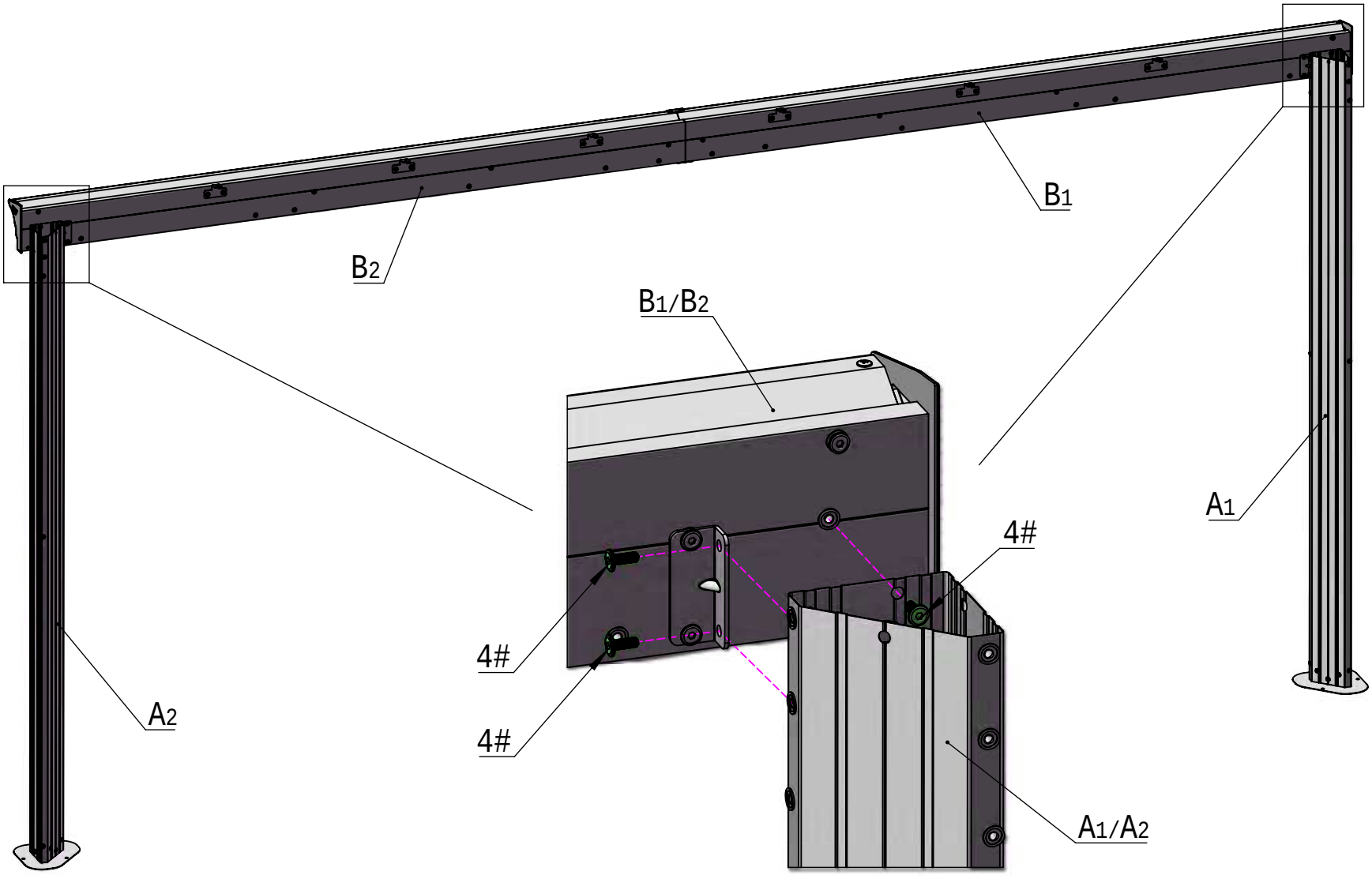

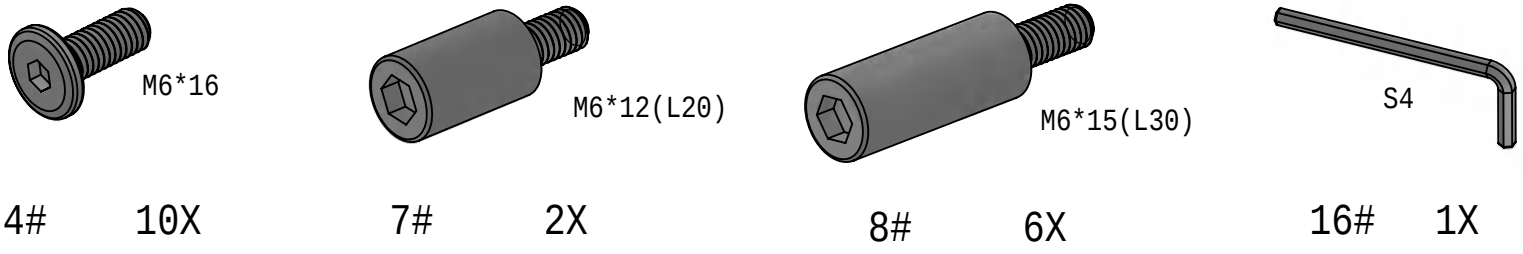

4#	10X	7#	2X	8#	6X	16#	1X

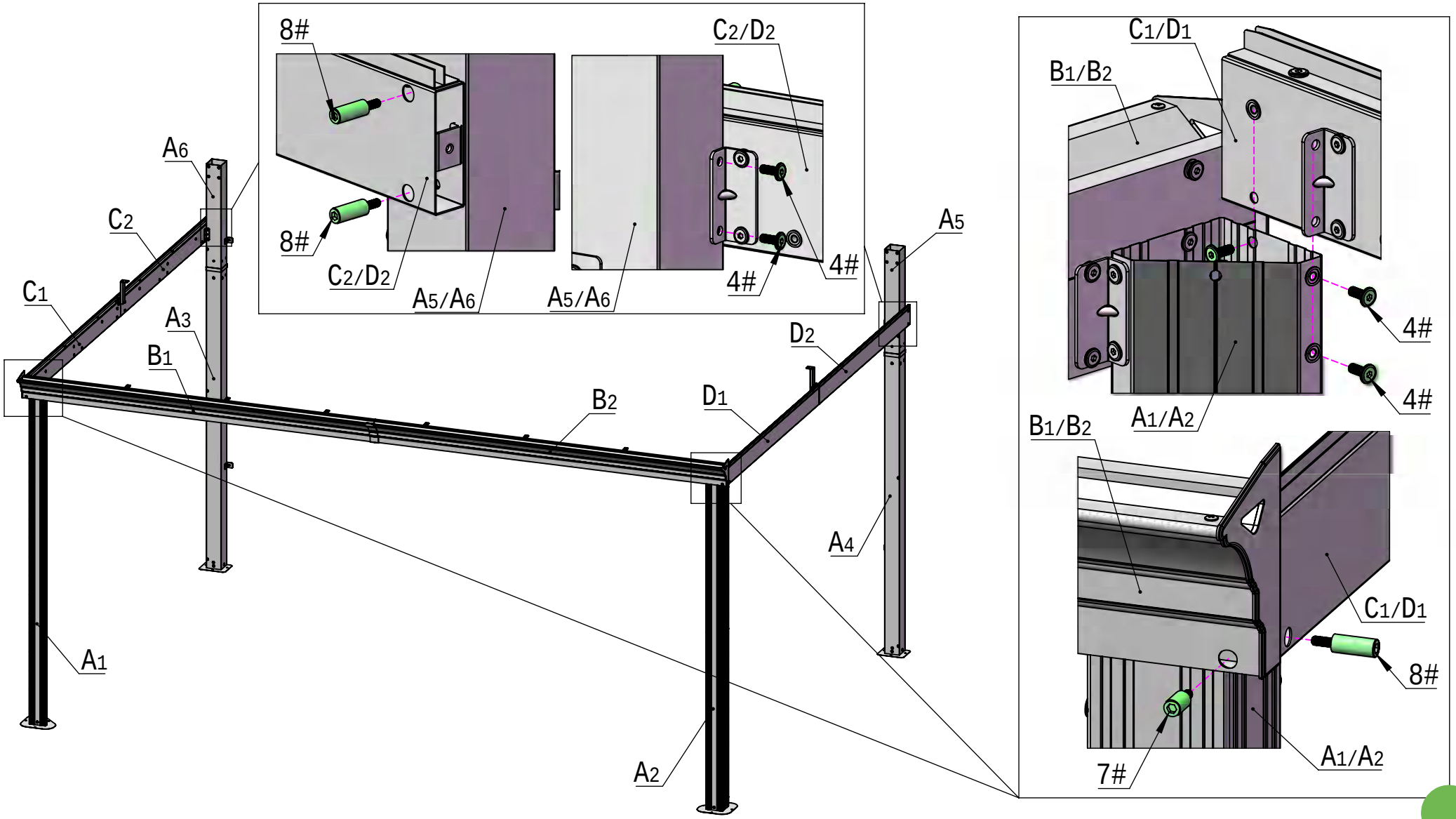

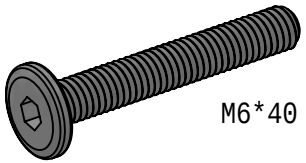
M6*40

6# 8X

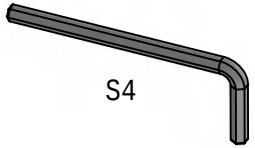
S4

16# 1X

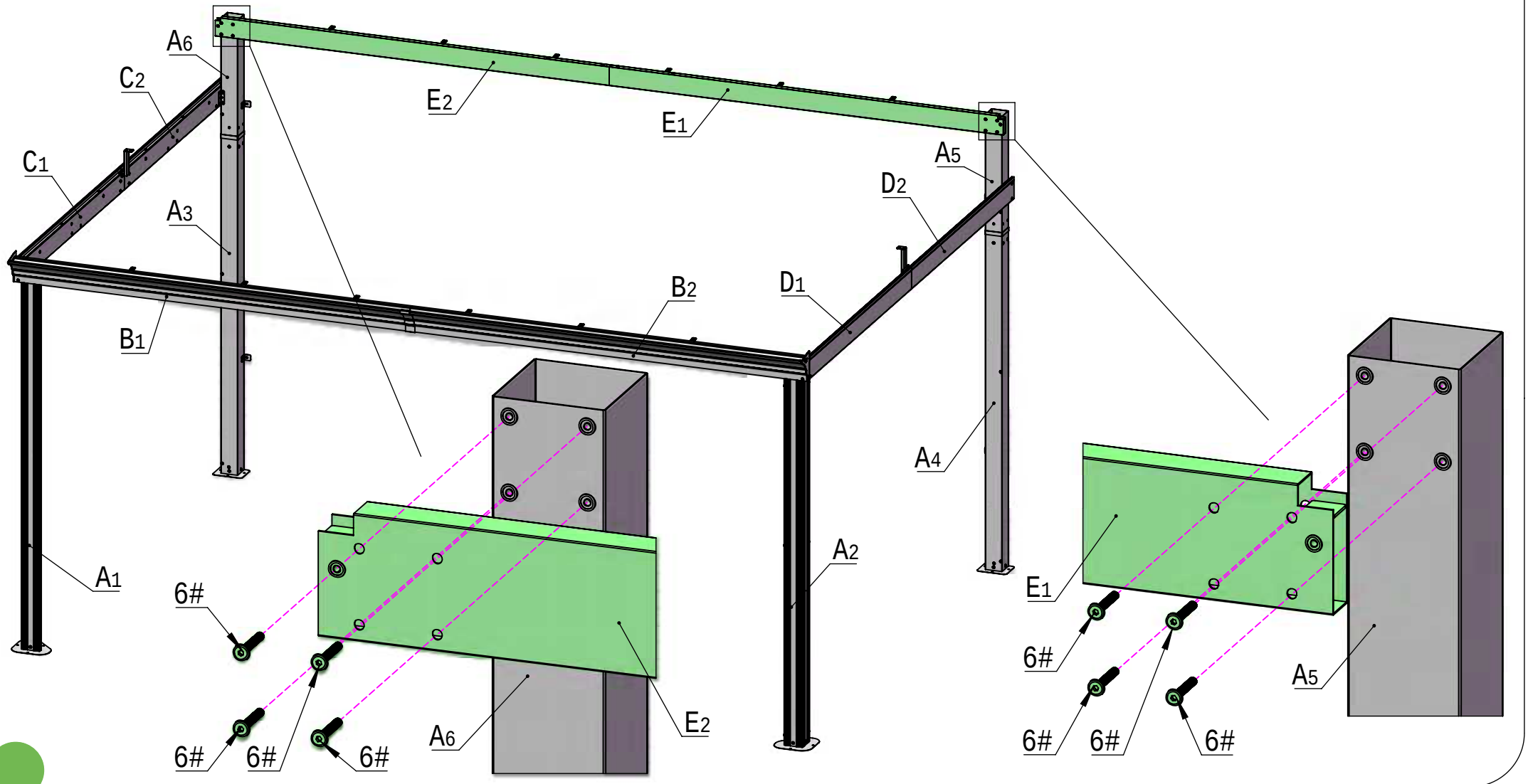
A6
C2
E2
E1
A5
C1
D2
A3
B2
D1
B1
A4
A1
A2
6#
6#
6#
6#
A6
E2
E1
6#
6#
6#
6#
A5

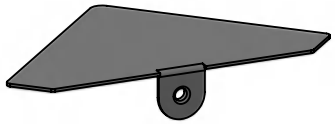

E4 2X

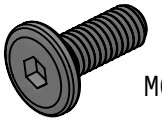

4# 2X

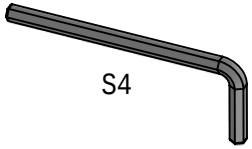

16# 1X

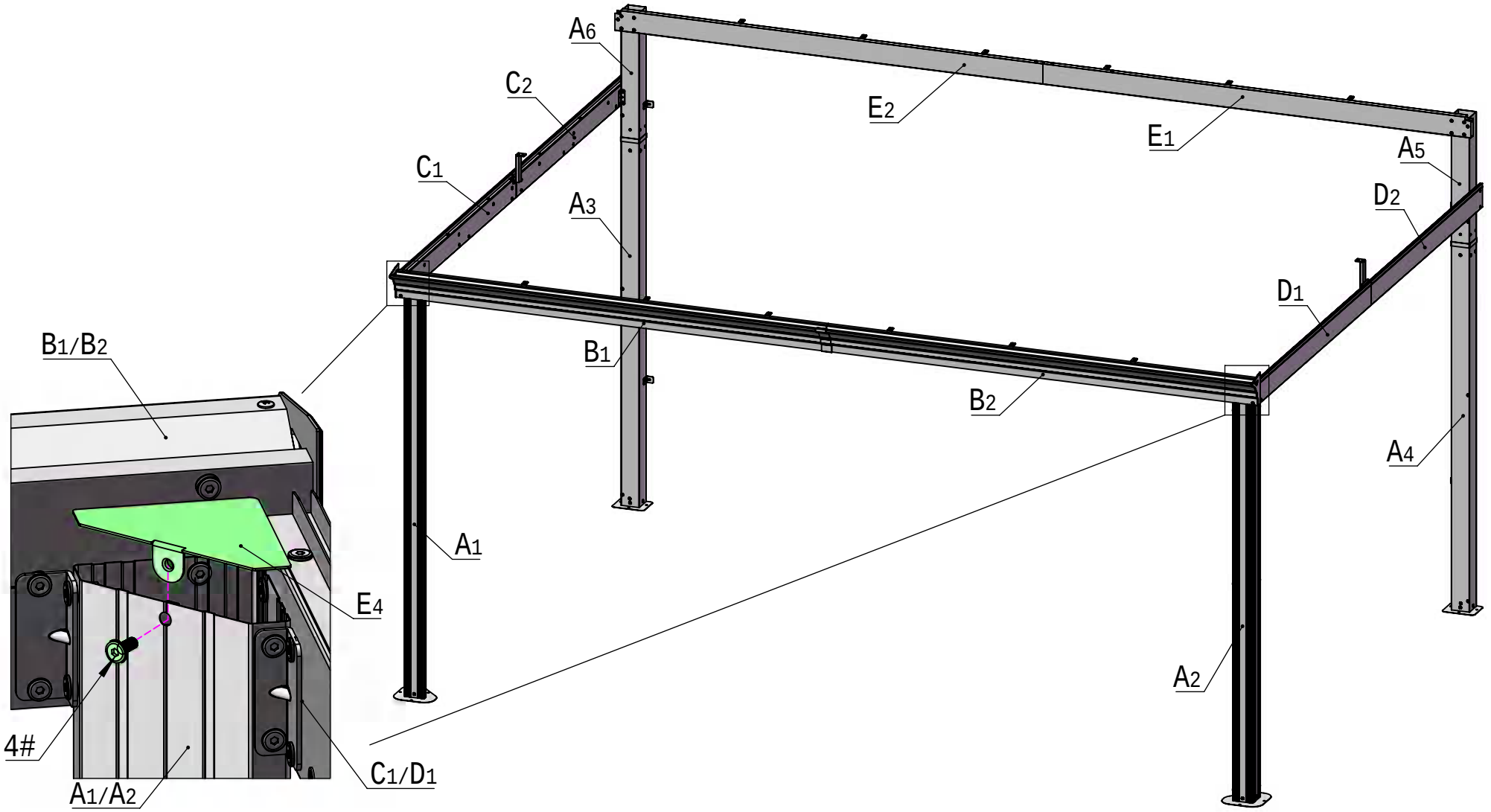

Middle Beam Assembly

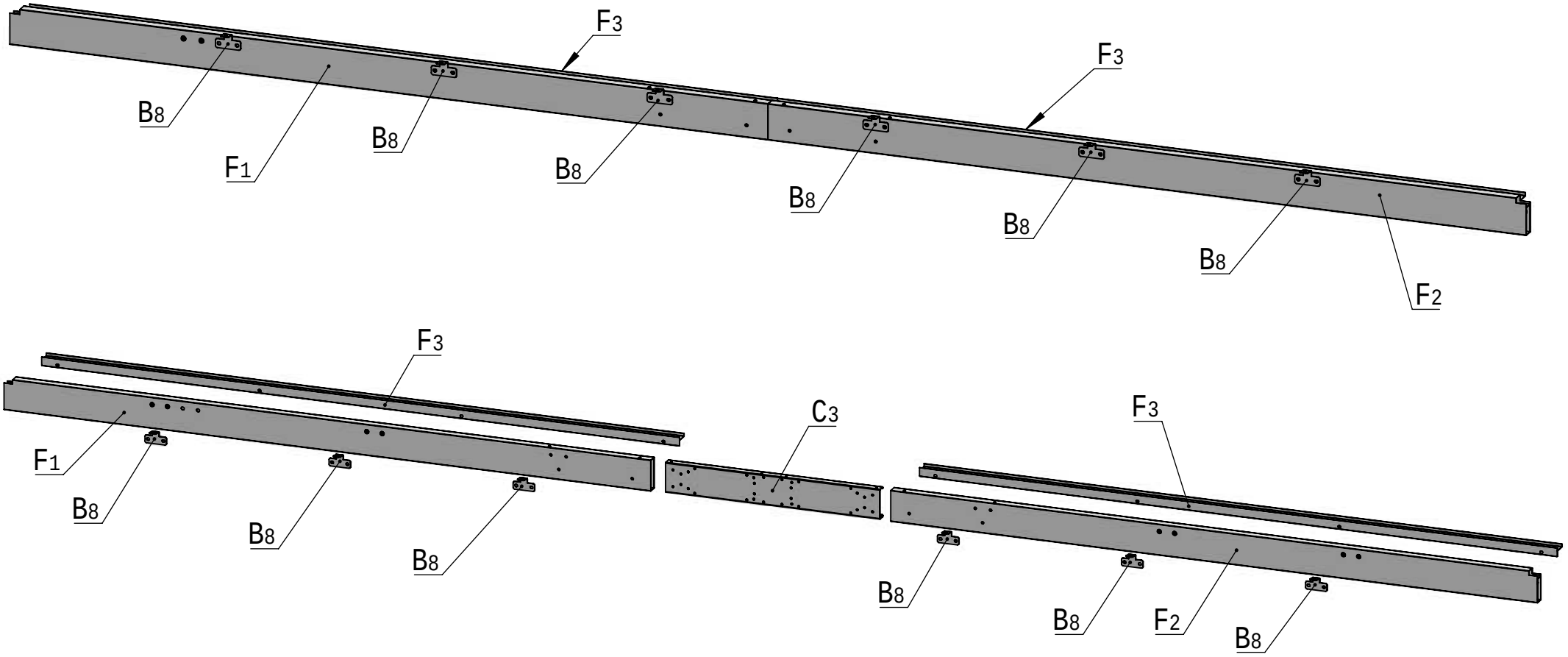

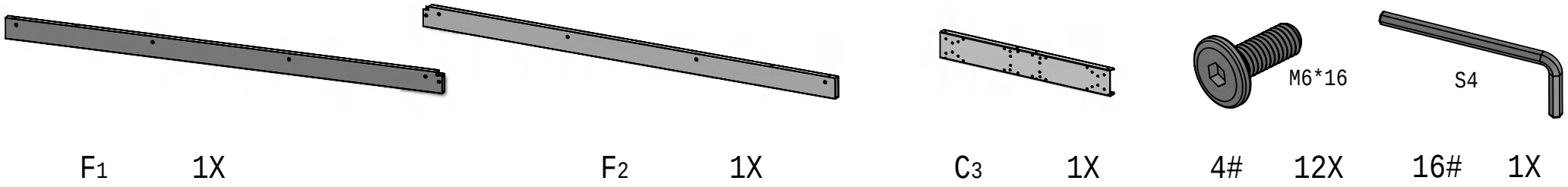

F1 1X F2 1X C3 1X 4# 12X 16# 1X

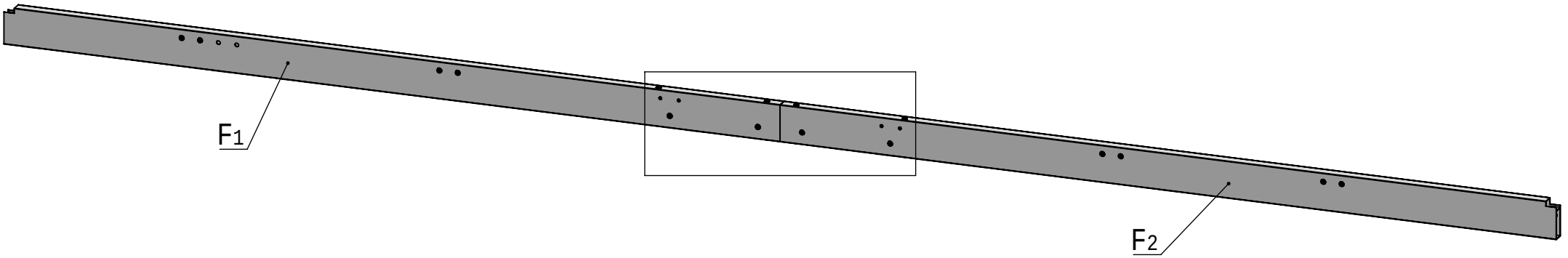

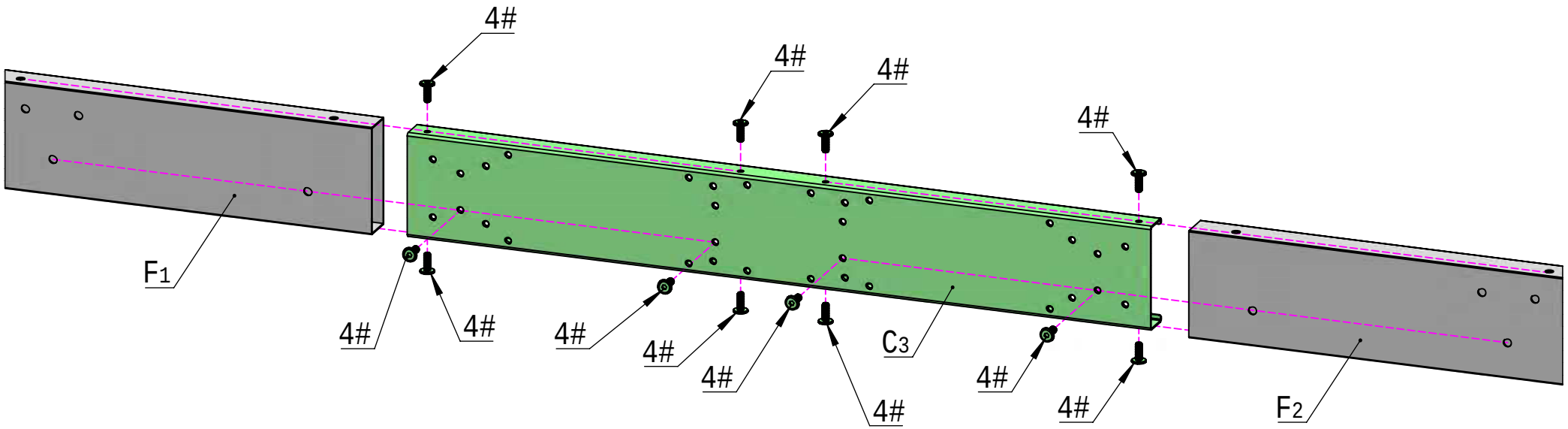

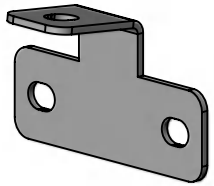

B8 6X

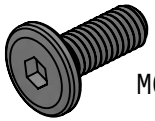

4# 12X

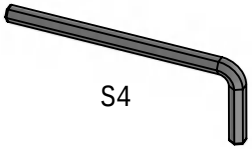

16# 1X

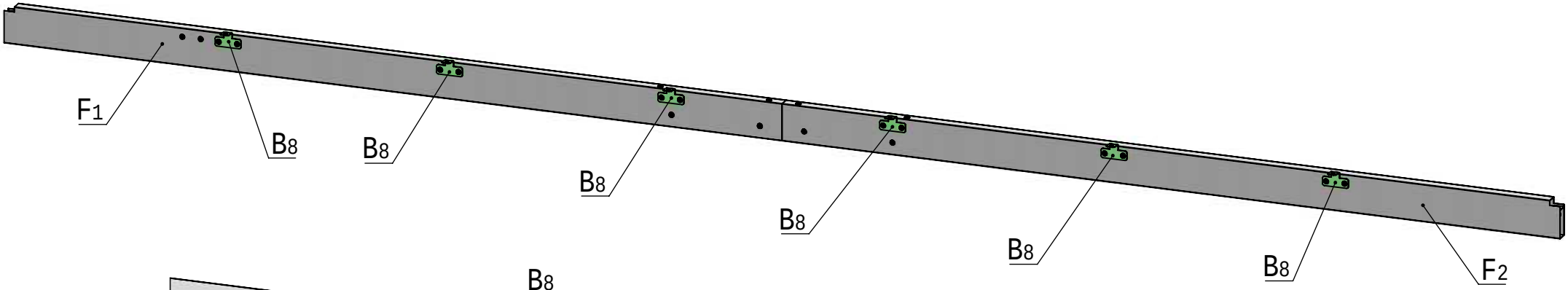

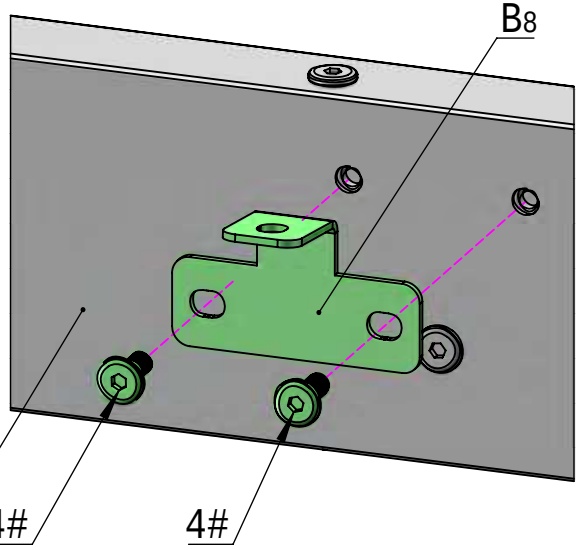

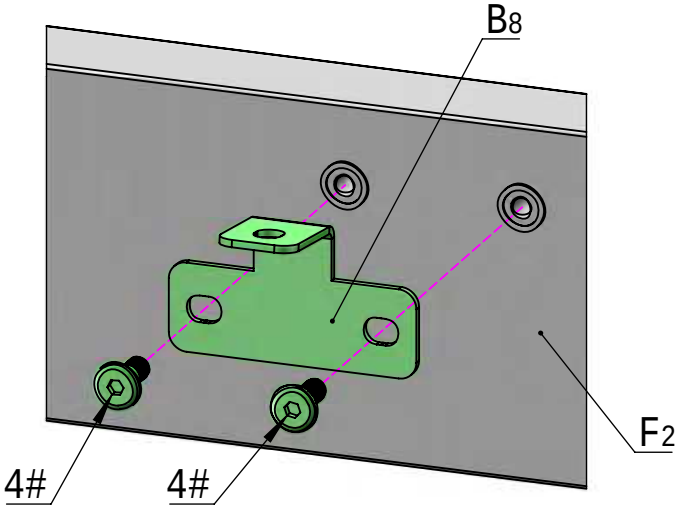

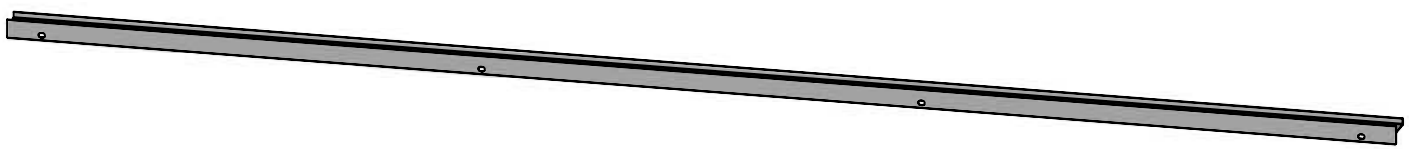

F3 2X

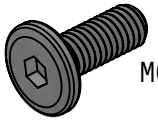

4# 8X

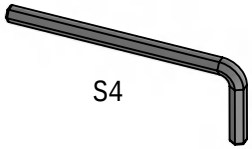

16# 1X

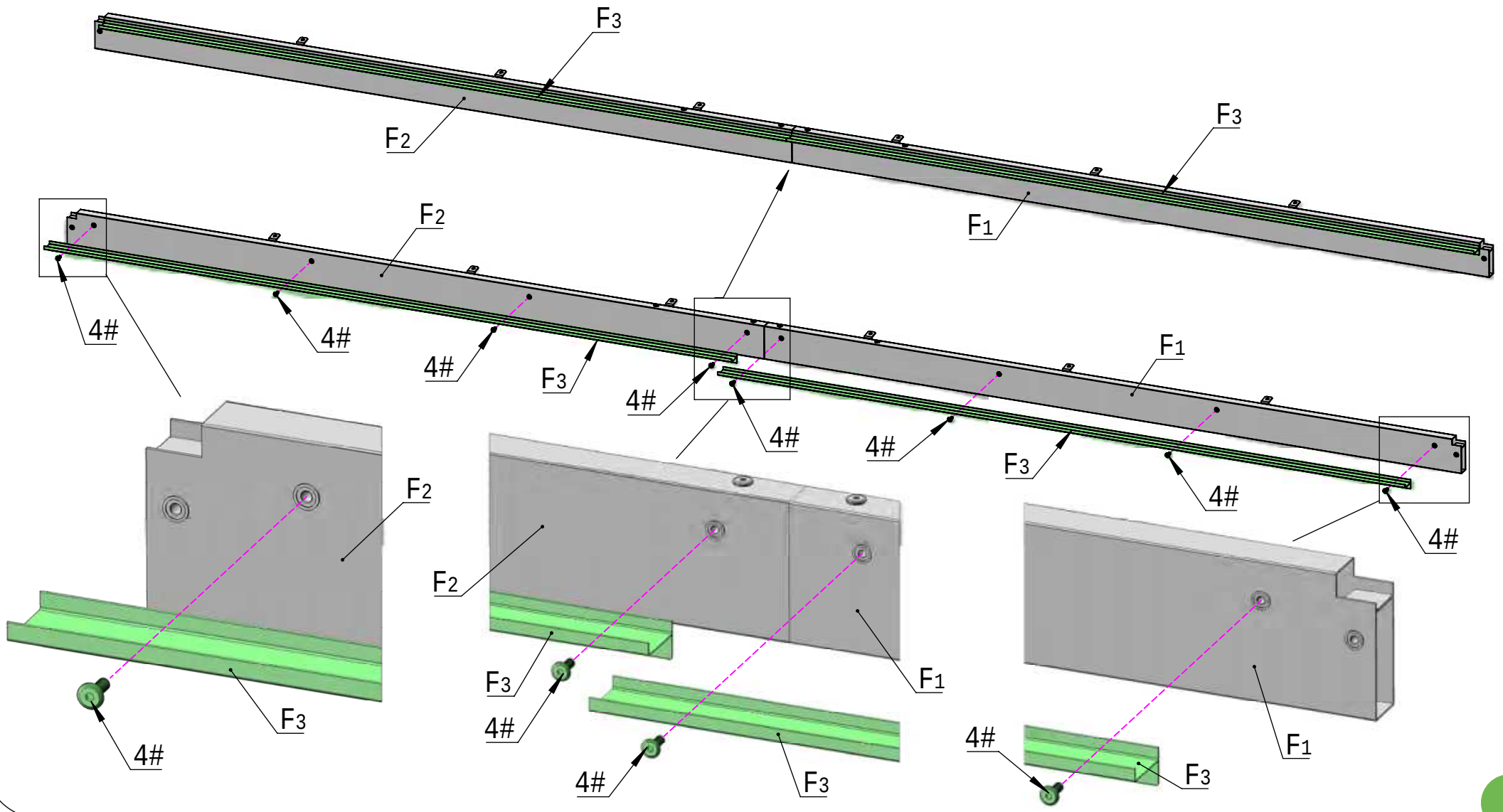

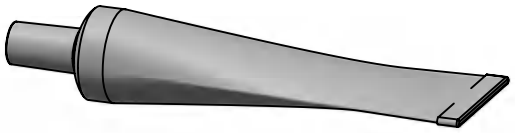

15# 1X

Use silicone sealant (part #15) to affix the gap between the two beams

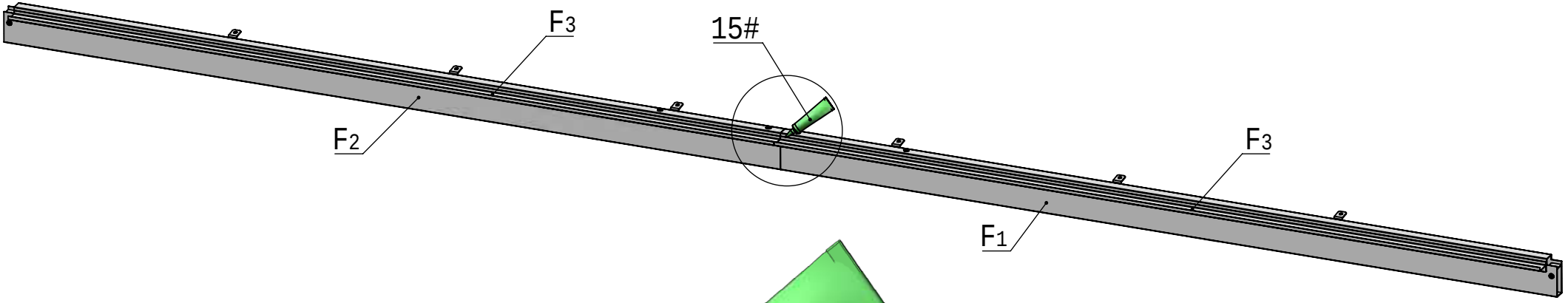

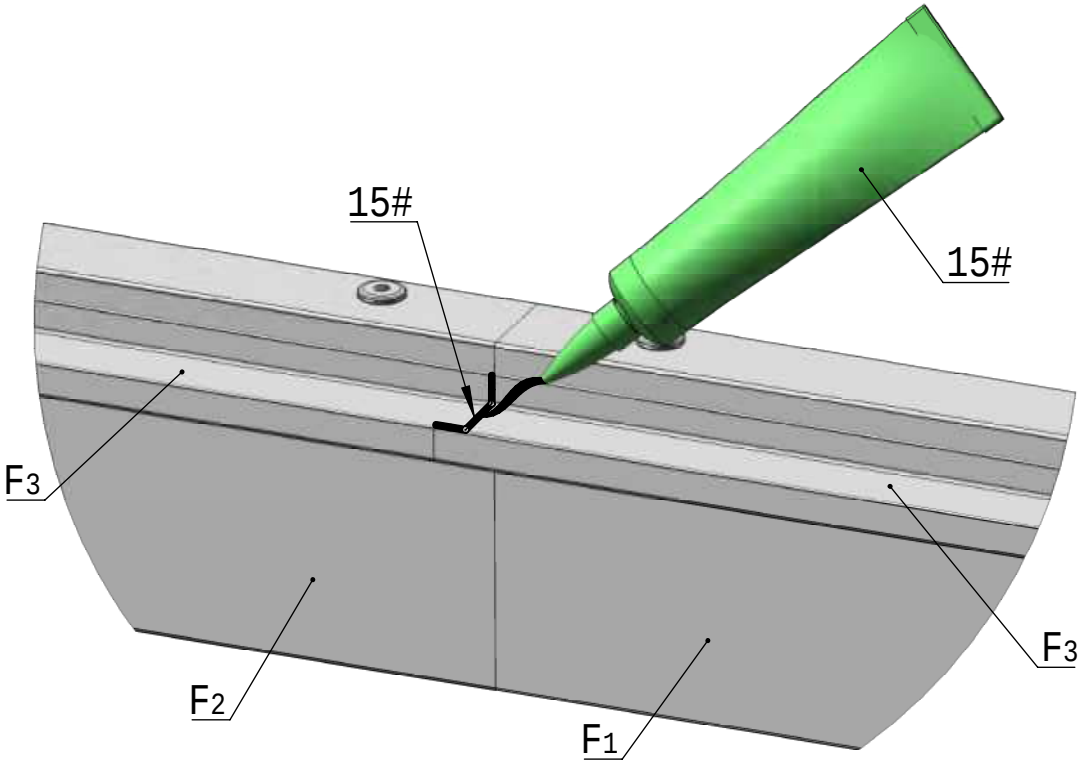

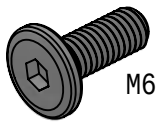
M6*16

4# 2X

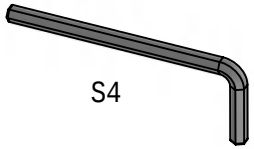
S4

16# 1X

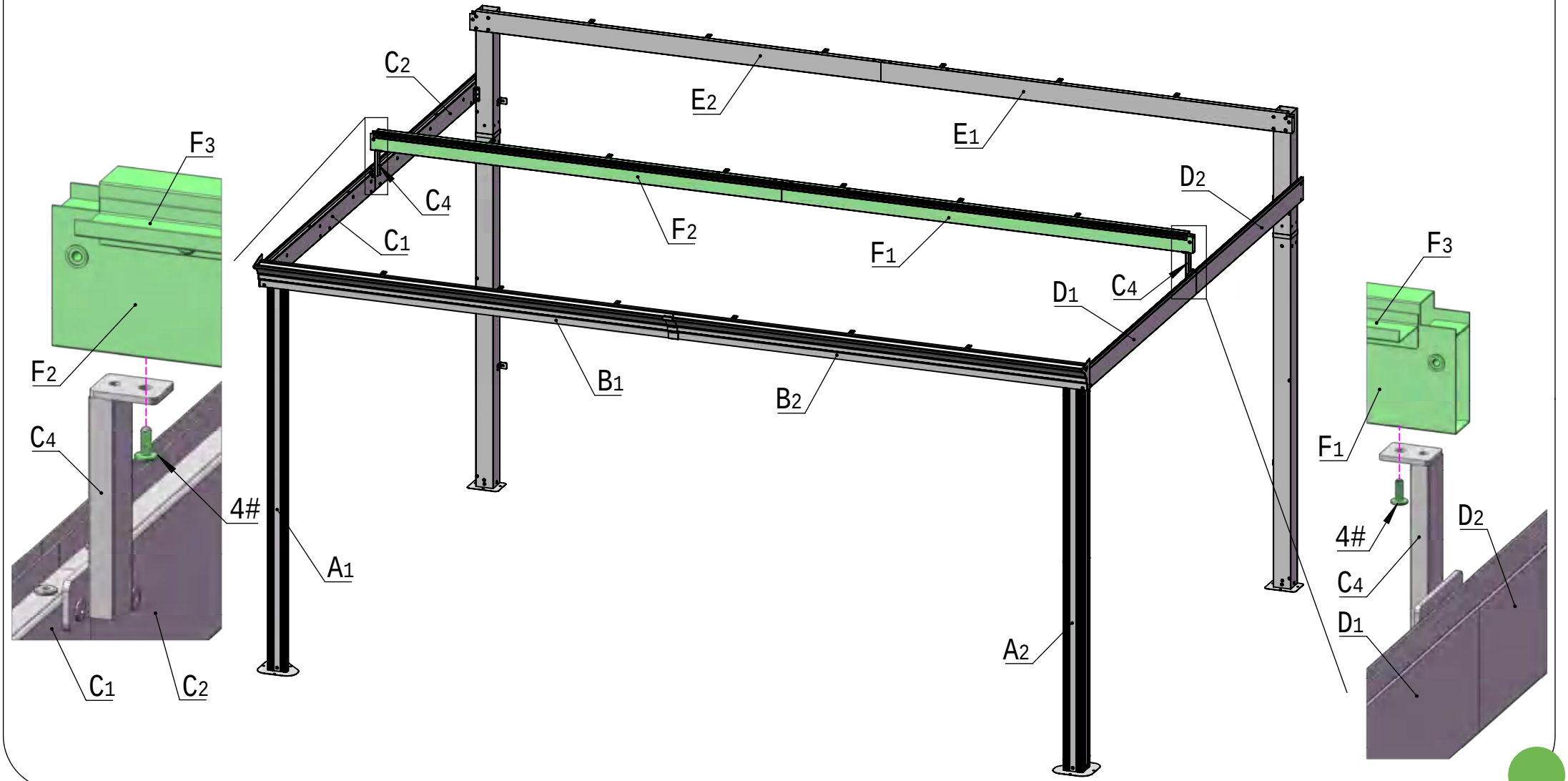
C2
E2
E1
F3
D2
C4
F2
C1
F1
D1
C4
F3
B1
B2
F2
C4
4#
A1
F1
4#
D2
C4
D1
C1
C2
A2

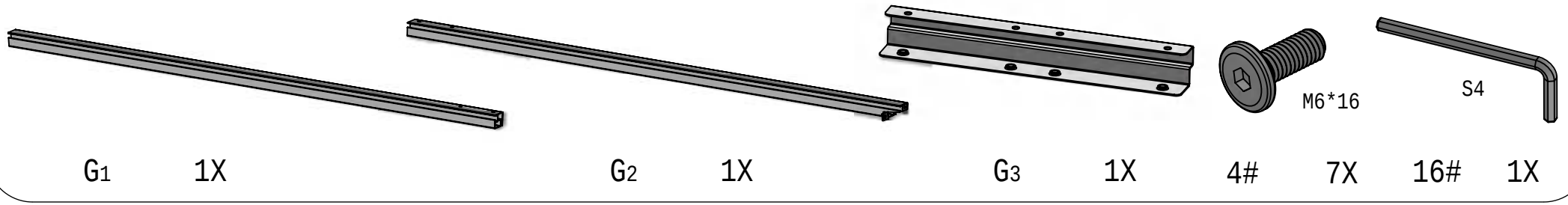

G1 1X G2 1X G3 1X 4# 7X 16# 1X

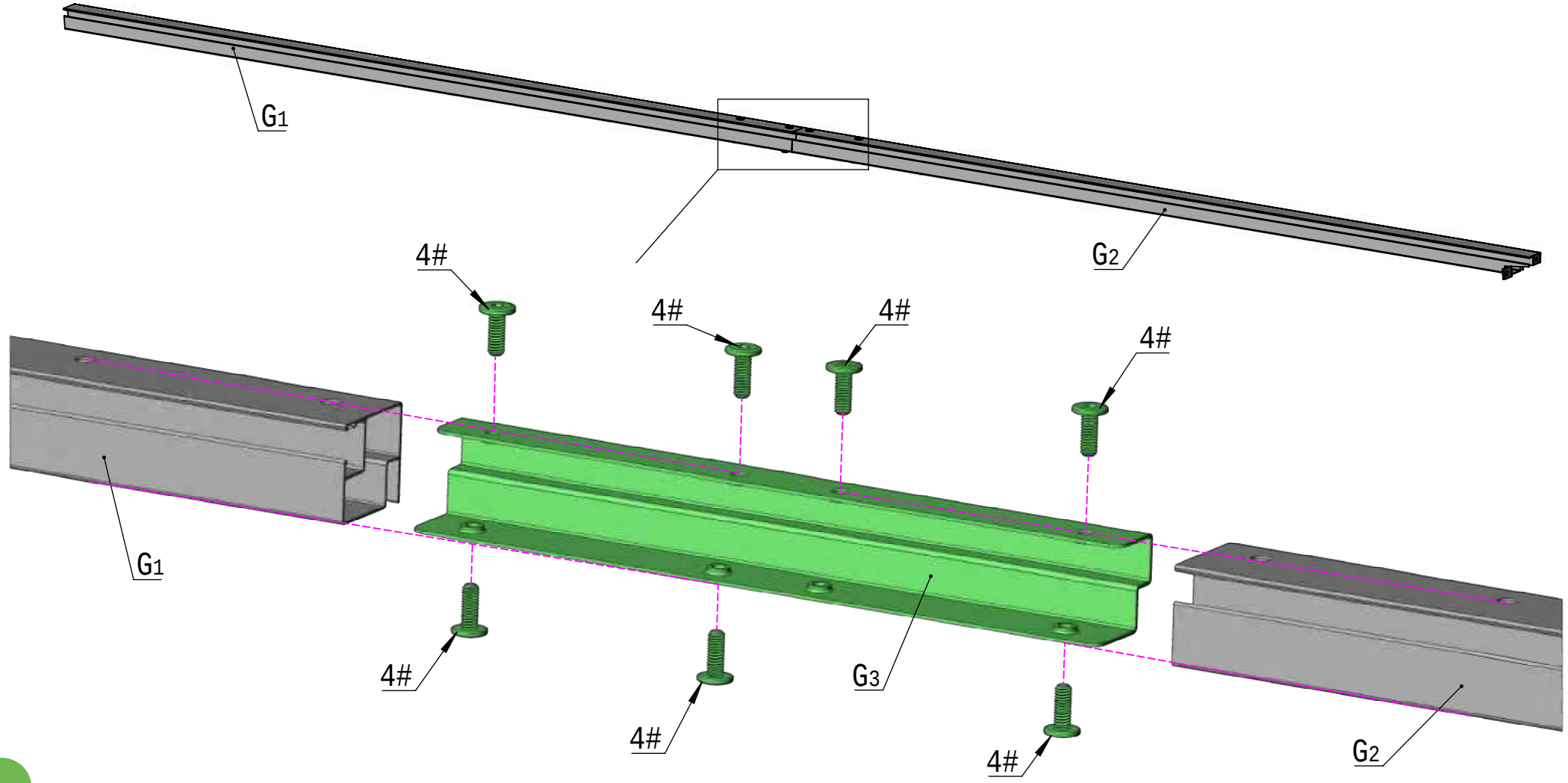



15# 1X



11# 1X

Apply a strip of waterproof tape (part #11) on the gap between G1 and G2. Then, fill the gap in the groove with silicone sealant (part #15).

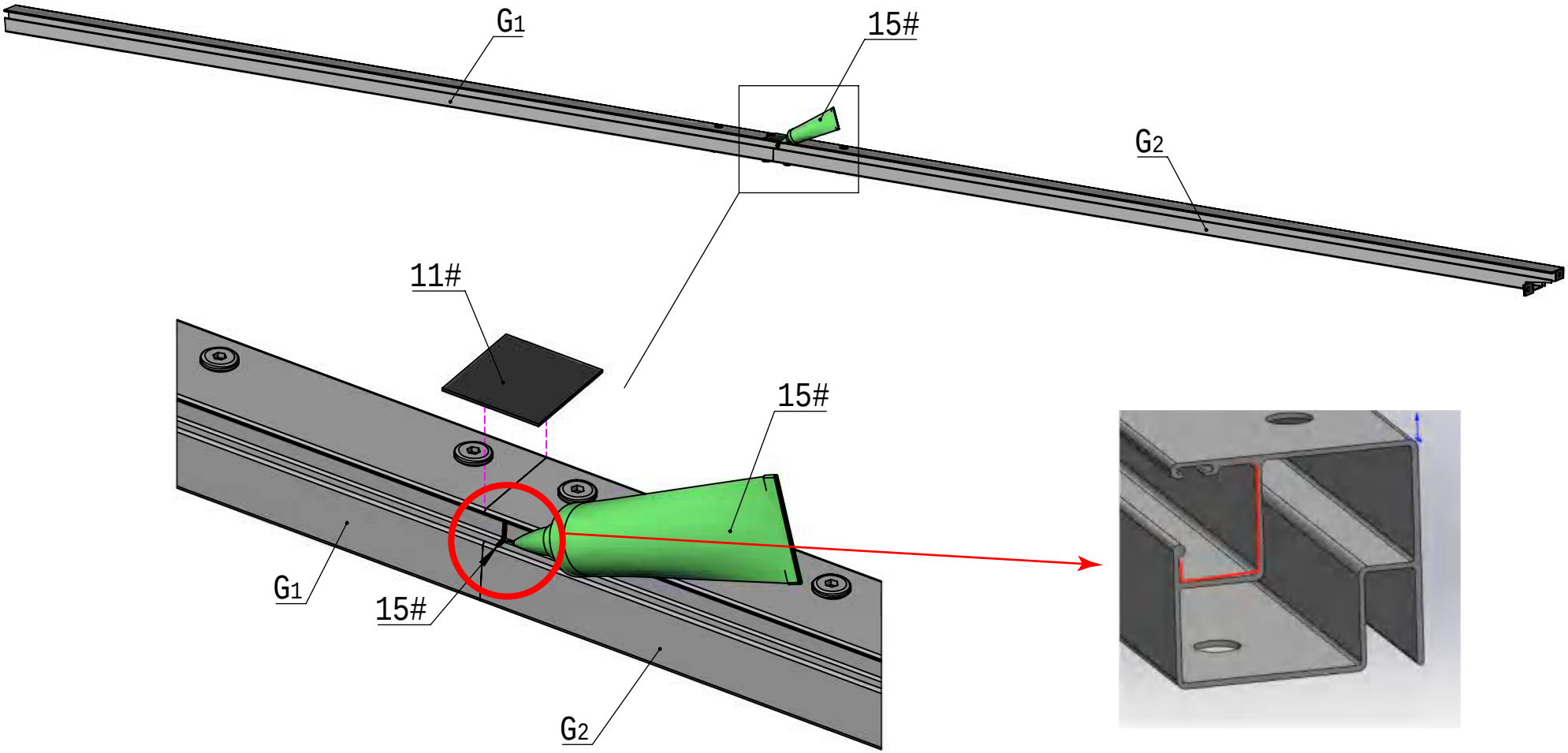

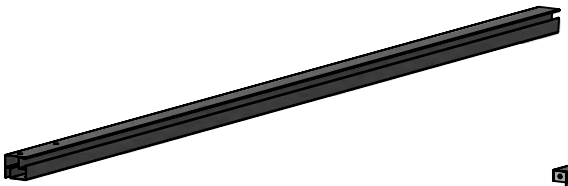

G4 1X

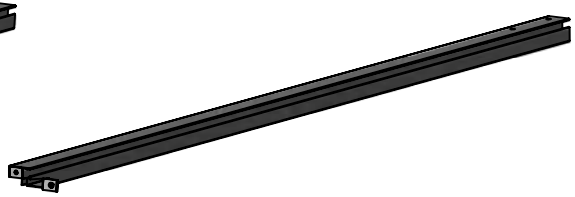

G5 1X

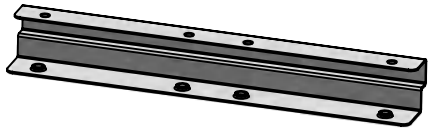

G3 1X

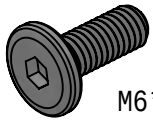

4# 7X

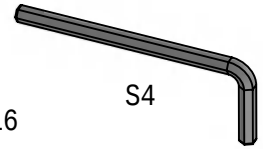

16# 1X

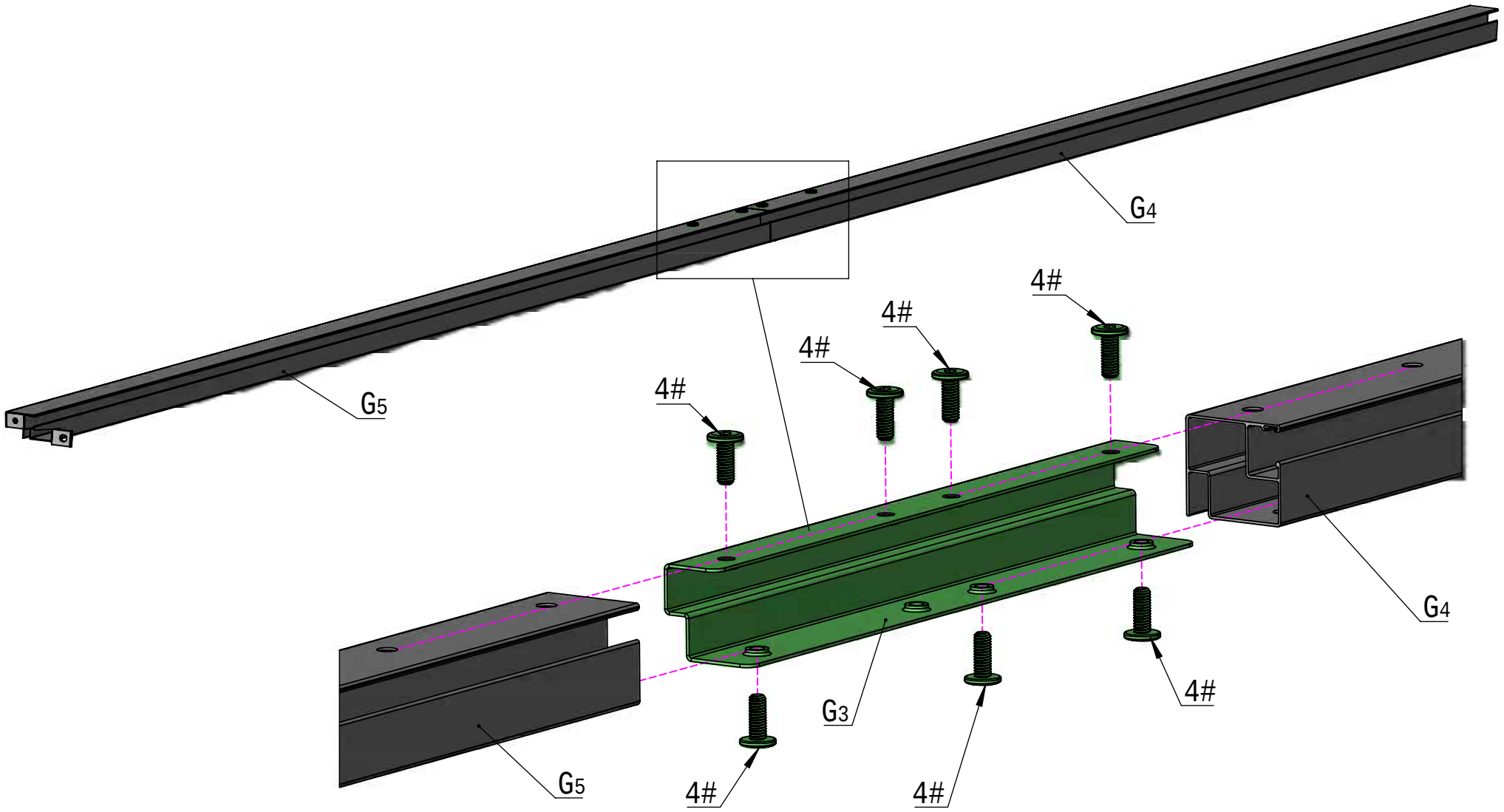



15# 1X



11# 1X

Apply a strip of waterproof tape (part #11) on the gap between G4 and G5. Then, fill the gap in the groove with silicone sealant (part #15).

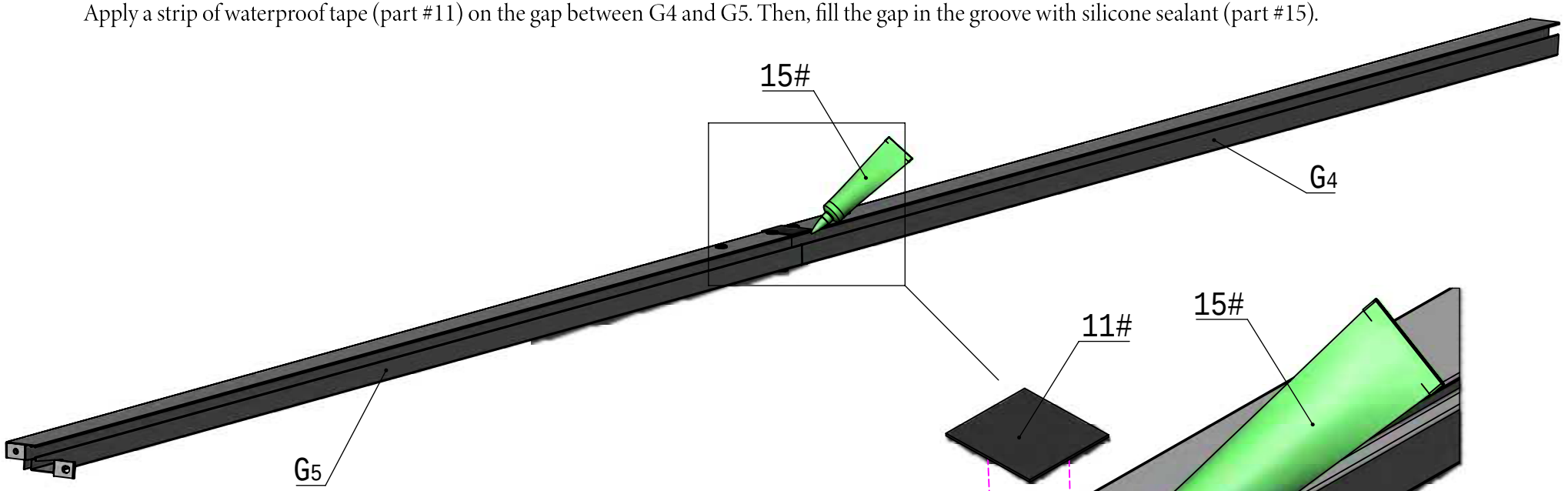

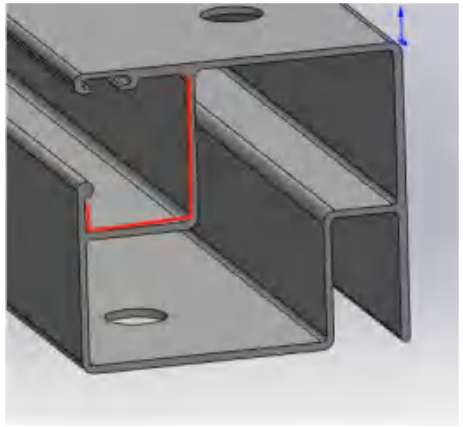

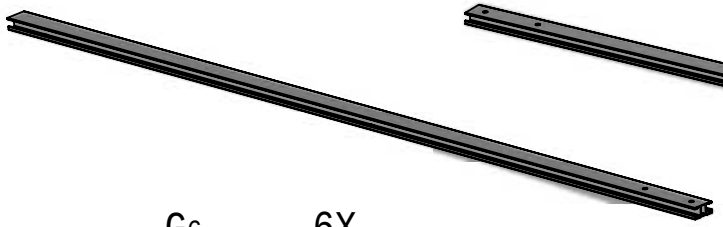

G6 6X

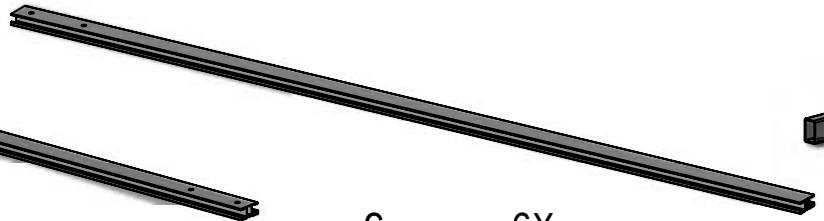

G7 6X

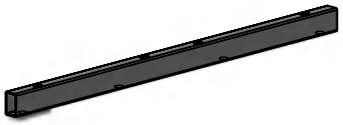

G8 6X

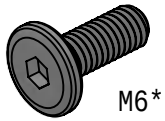

4# 42X

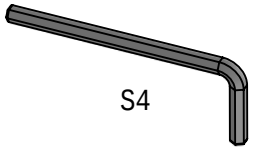

16# 1X

6X

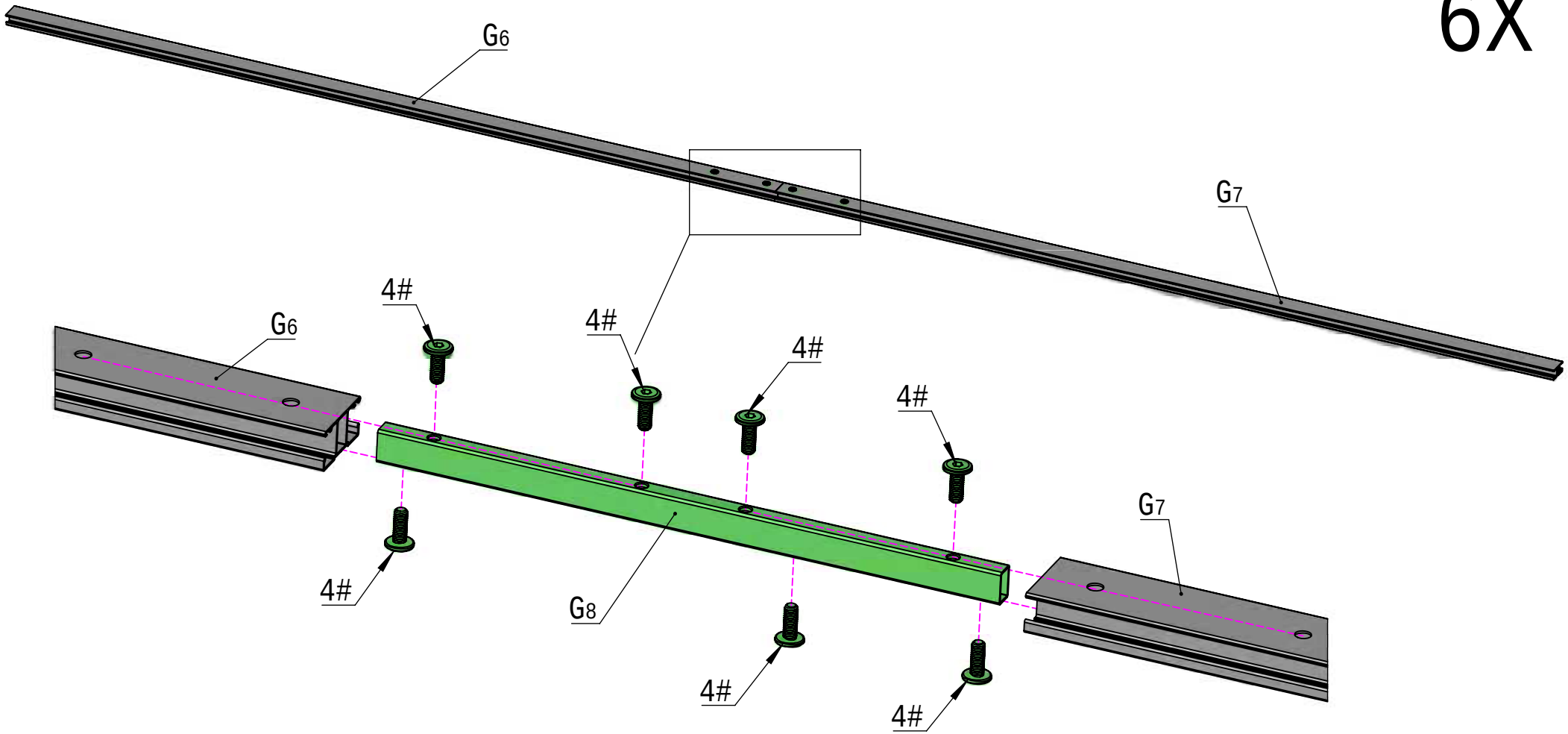



15# 1X



11# 1X

6X

Apply a strip of waterproof tape (part #11) on the gap between G6 and G7.
Then, use silicone sealant (part #15) to fill the gap in the groove on both sides.

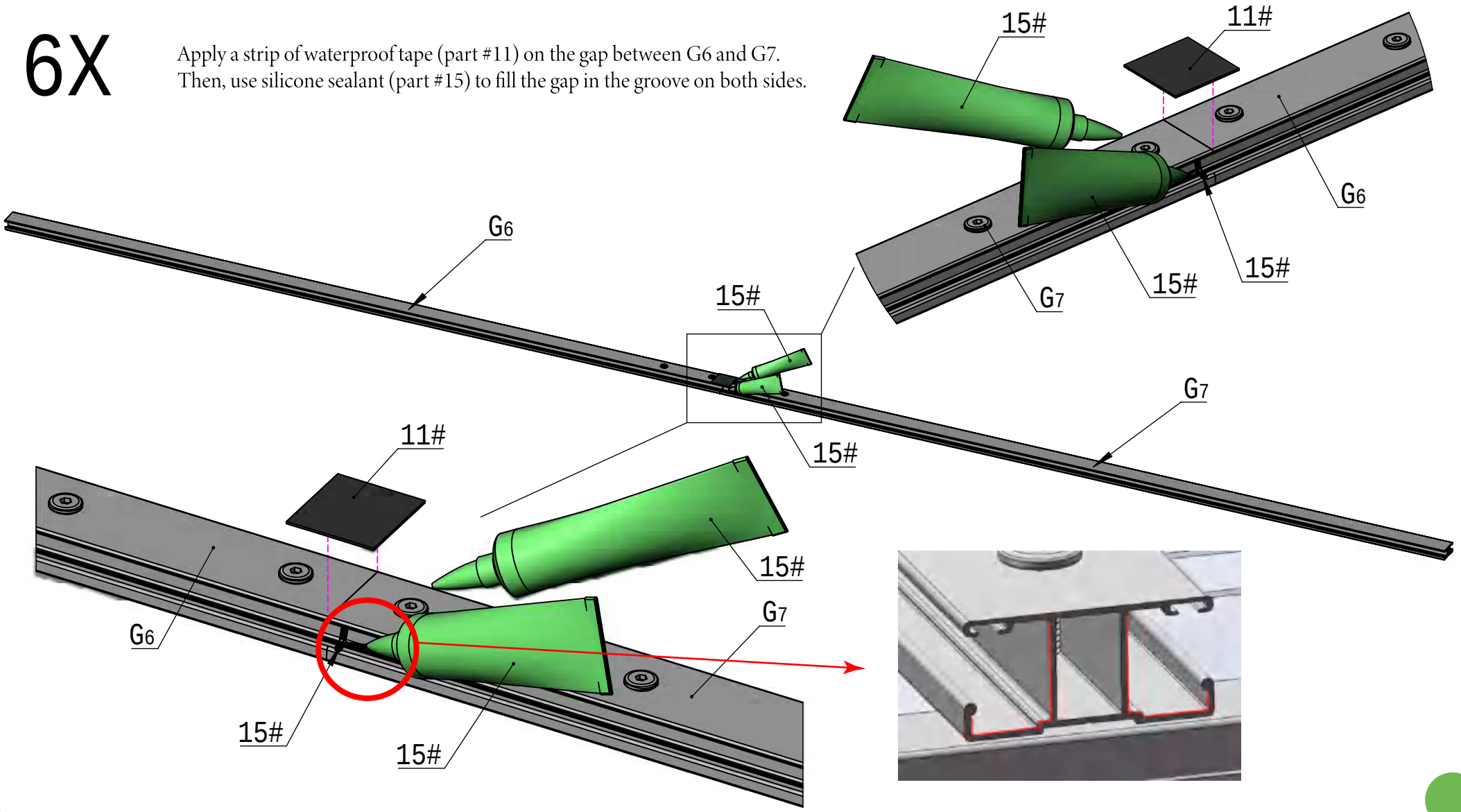

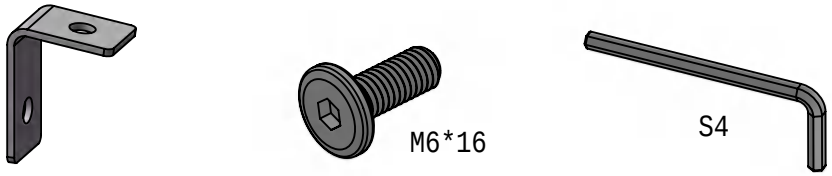

G9 4X 4# 10X 16# 1X

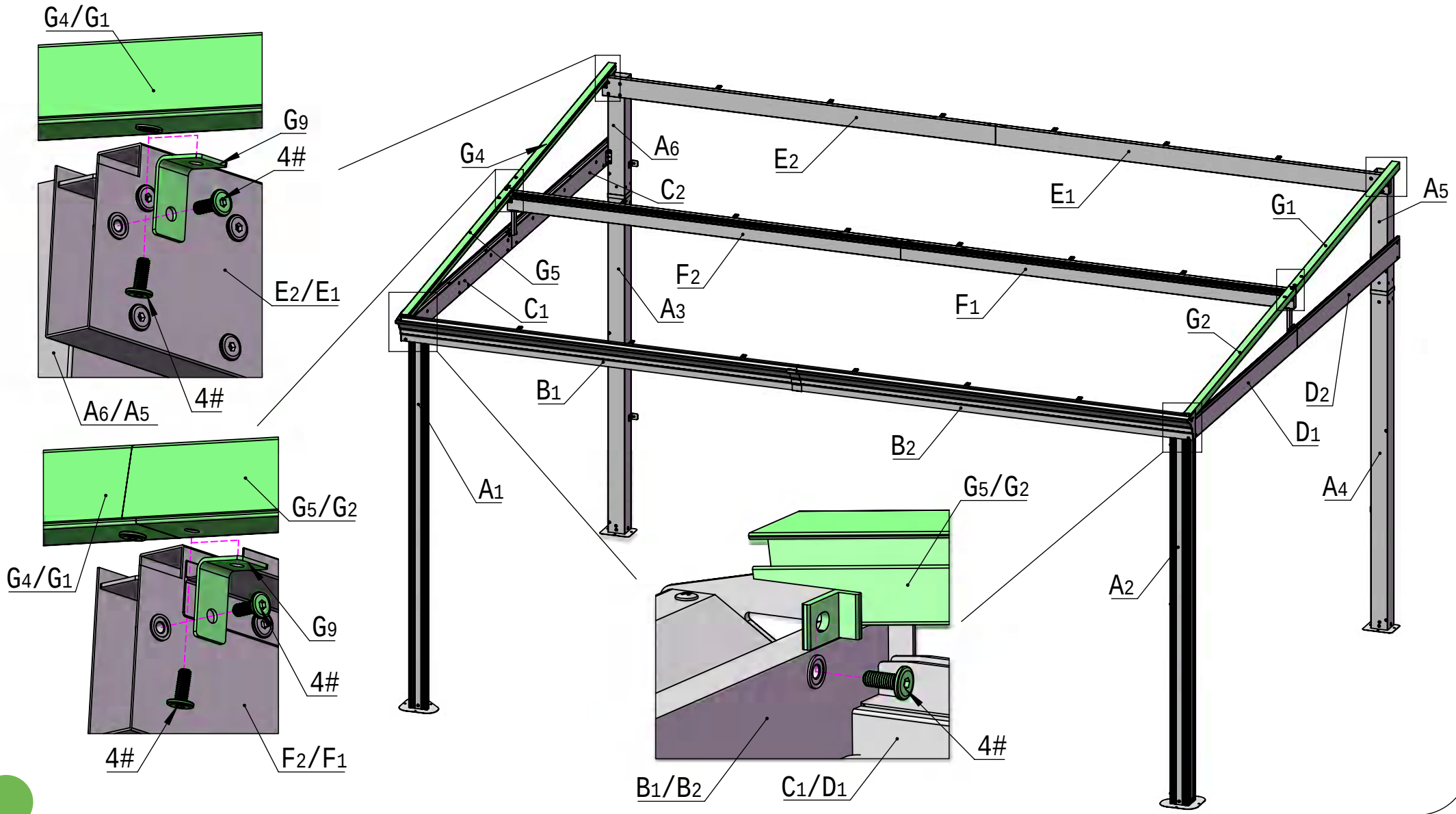

IMPORTANT! POLYCARBONATE INFORMATION

- Each polycarbonate panel has a UV coating on only ONE (1) side of the panel.
- To install properly so the UV coating is on the outside of the panel.

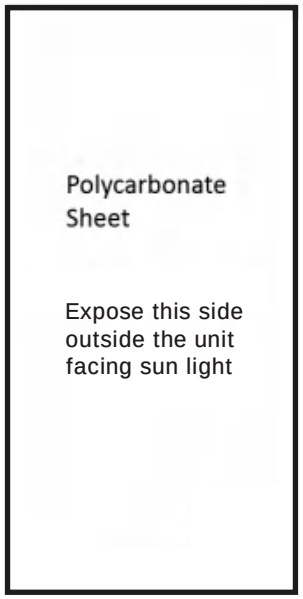

- Remove film immediately before installing tape to prevent damage to the panels.

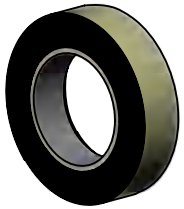

28# 1X

Note: Before installing the side panel, make sure to remove the protective film. Then centre the tape (#28) on the polycarbonate panel so it is equal on both sides. Fold the tape around the edges and rub gently to avoid damaging the tape.

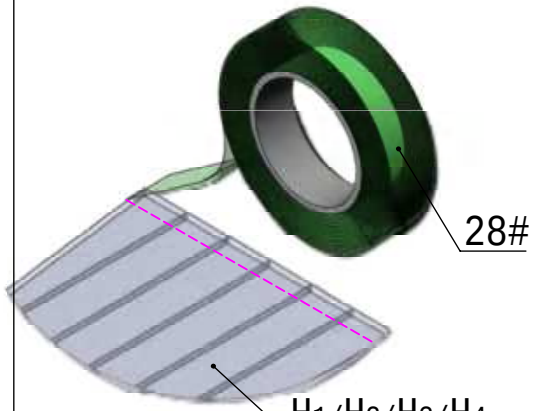

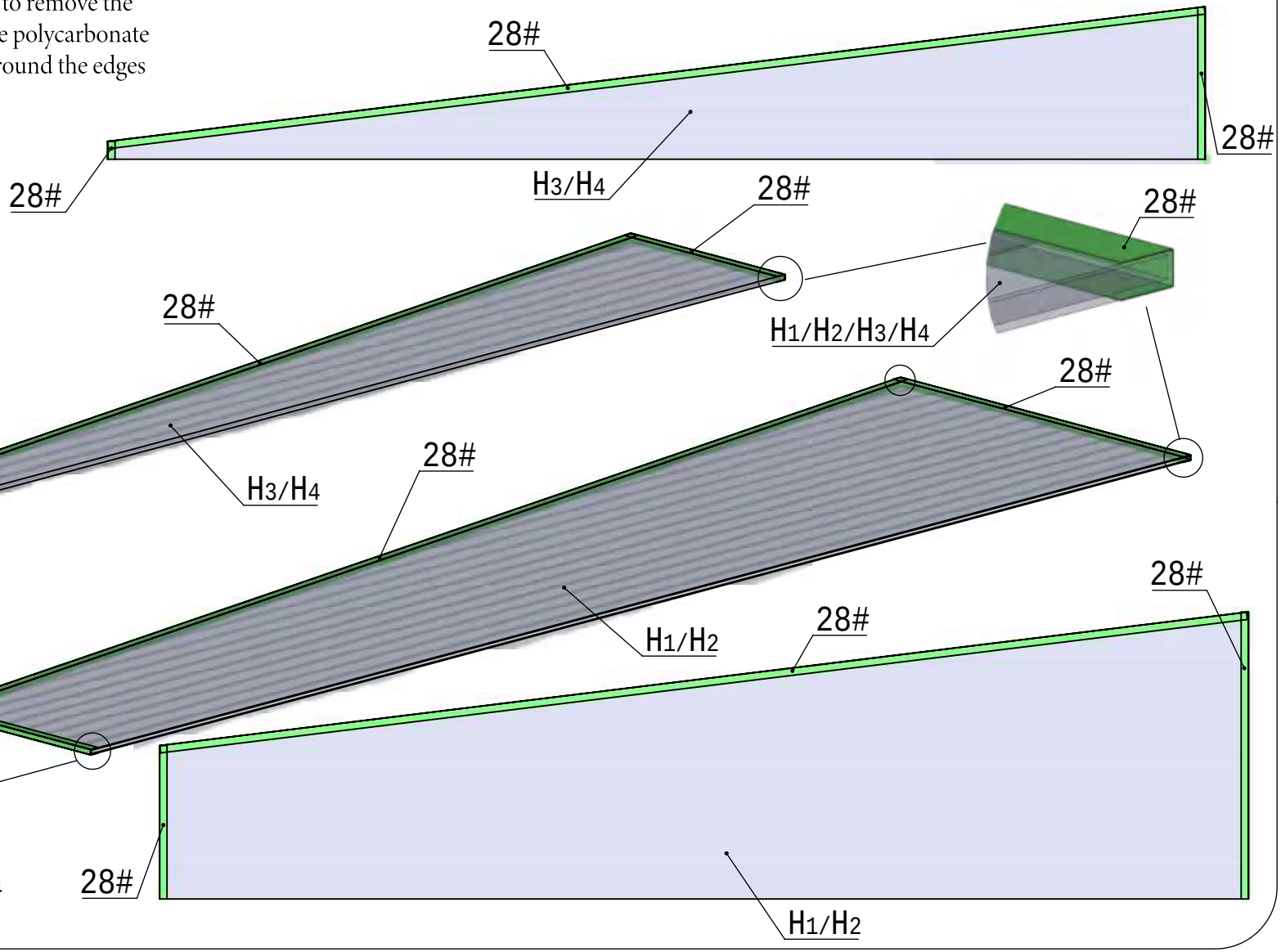

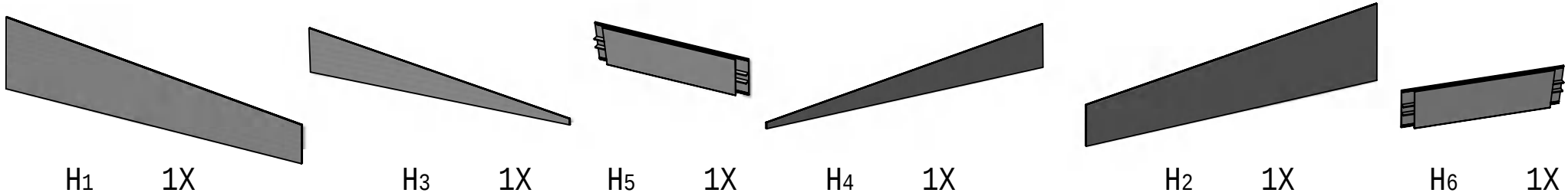

H1 1X H3 1X H5 1X H4 1X H2 1X H6 1X

The notches of # H5 & H6 are facing inward.

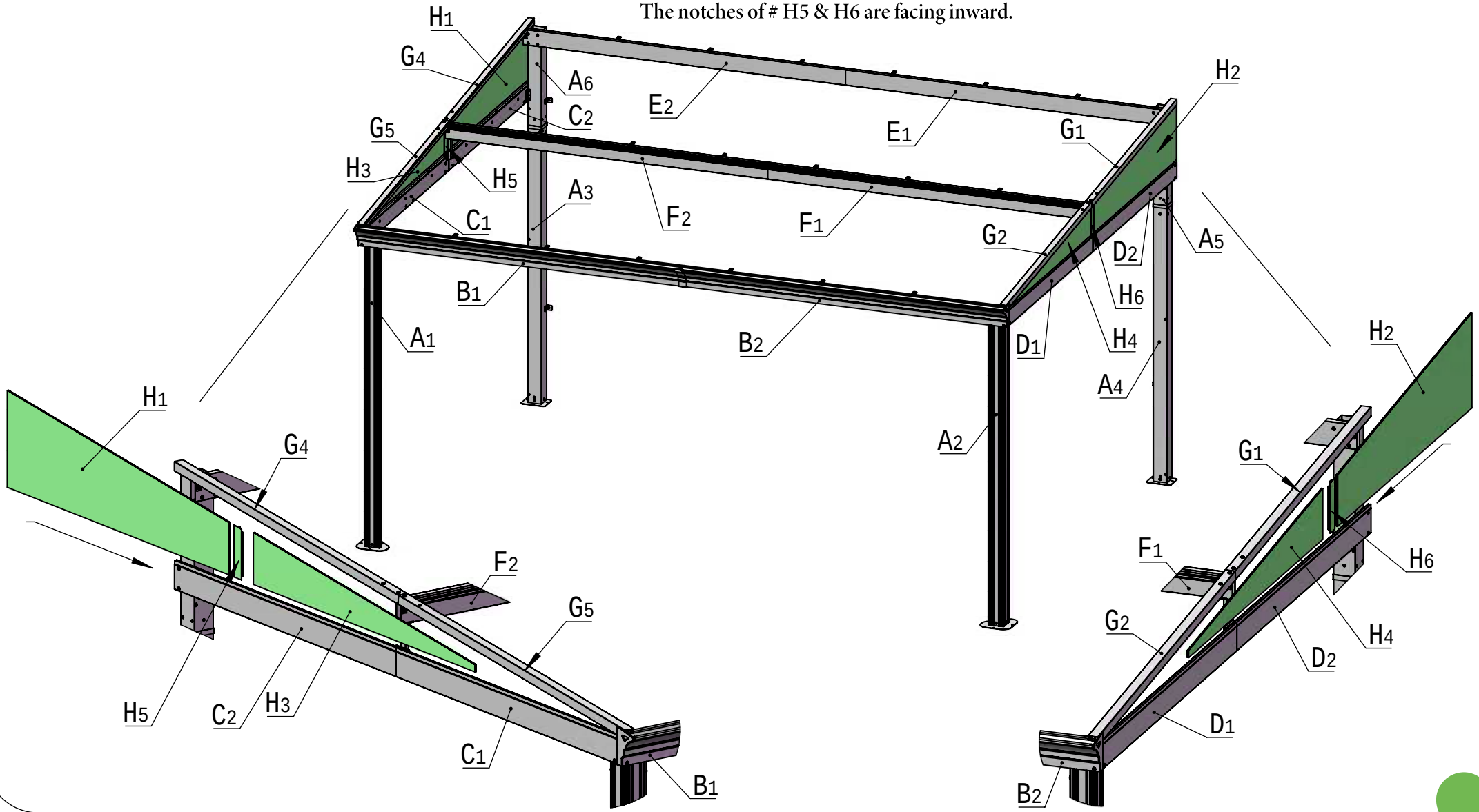

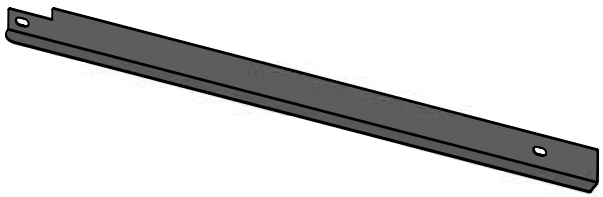

H7 1X

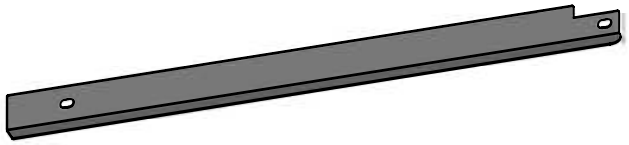

H8 1X

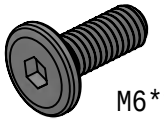

4# 4X

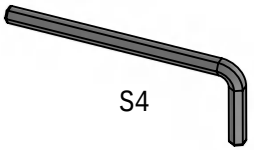

16# 1X

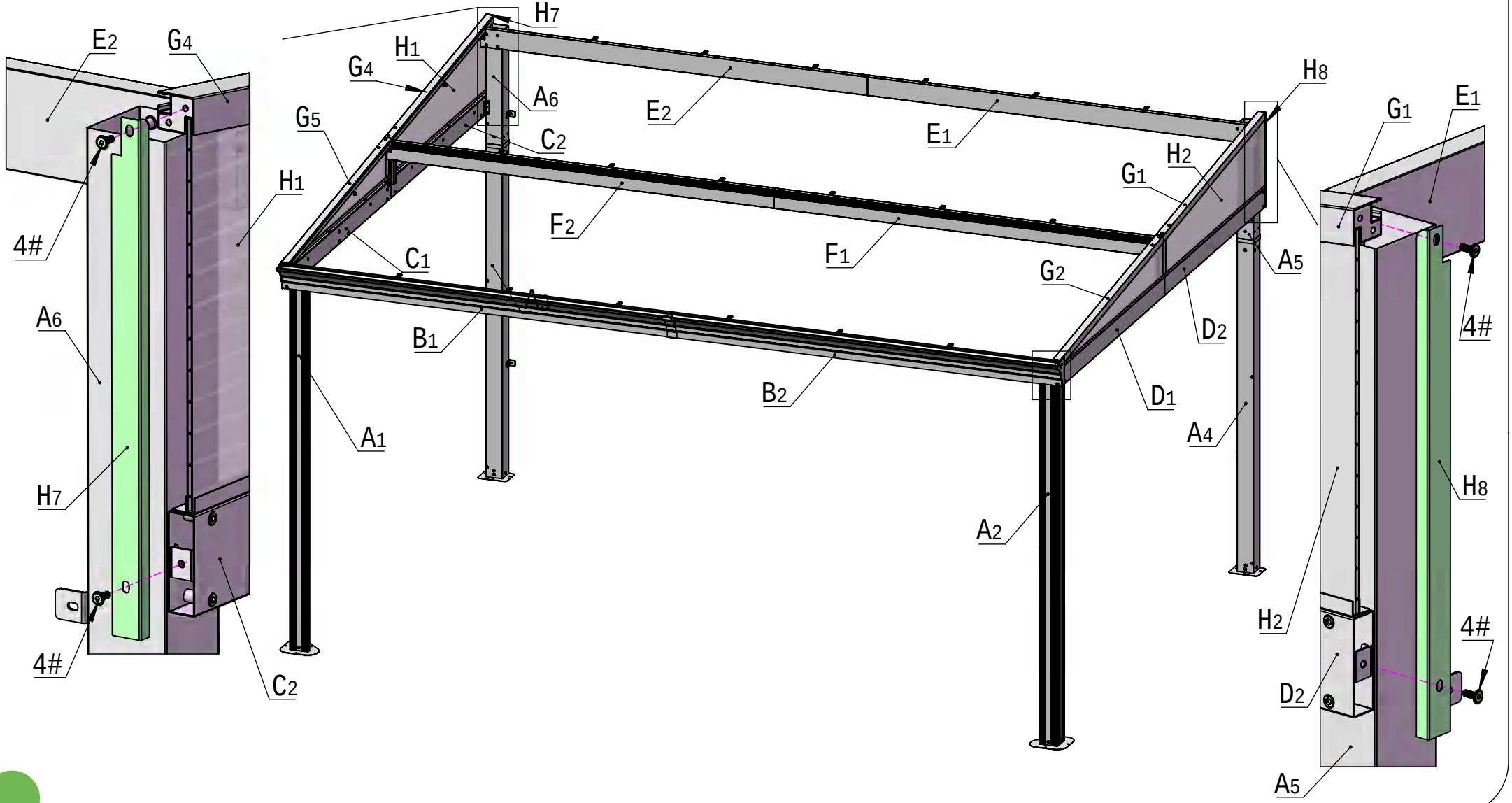

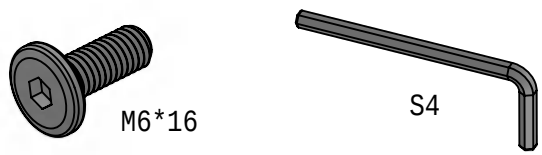

4# 18X

16# 1X

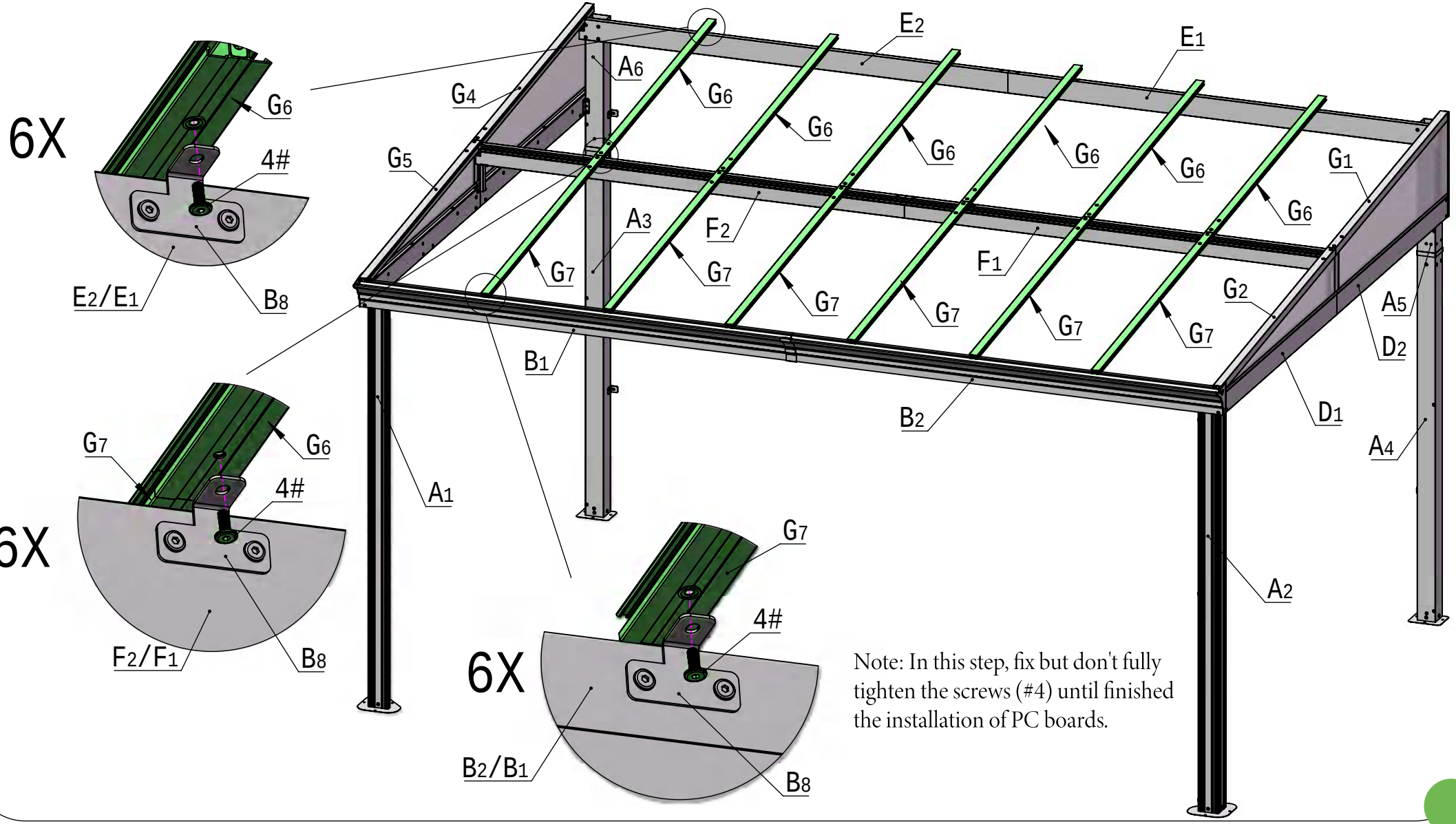

Note: In this step, fix but don't fully tighten the screws (#4) until finished the installation of PC boards.

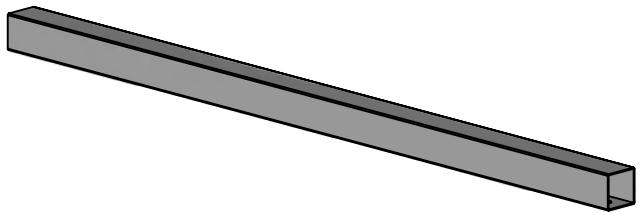

J1 2X

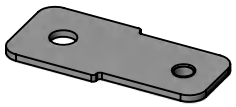

J2 2X

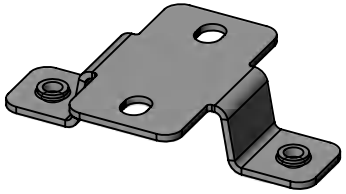

J3 2X

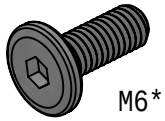

4# 10X

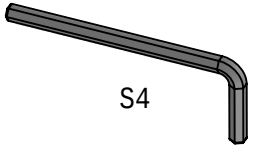

16# 1X

2X

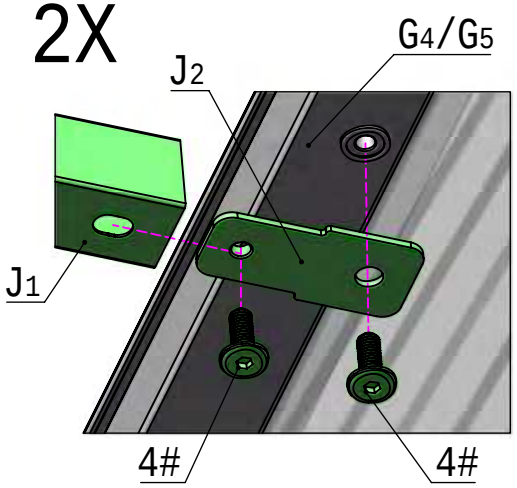

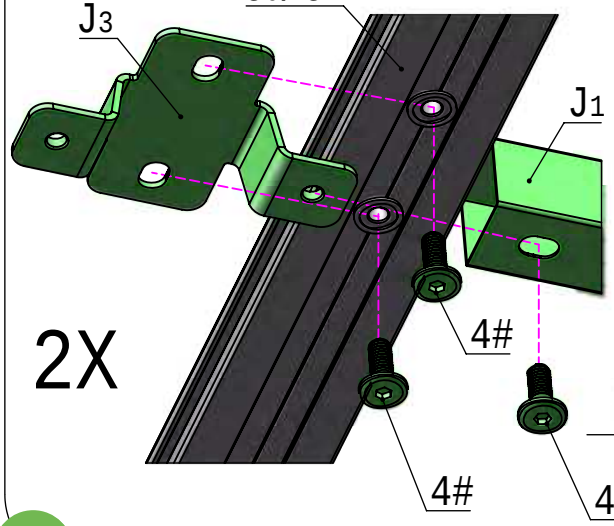

2X

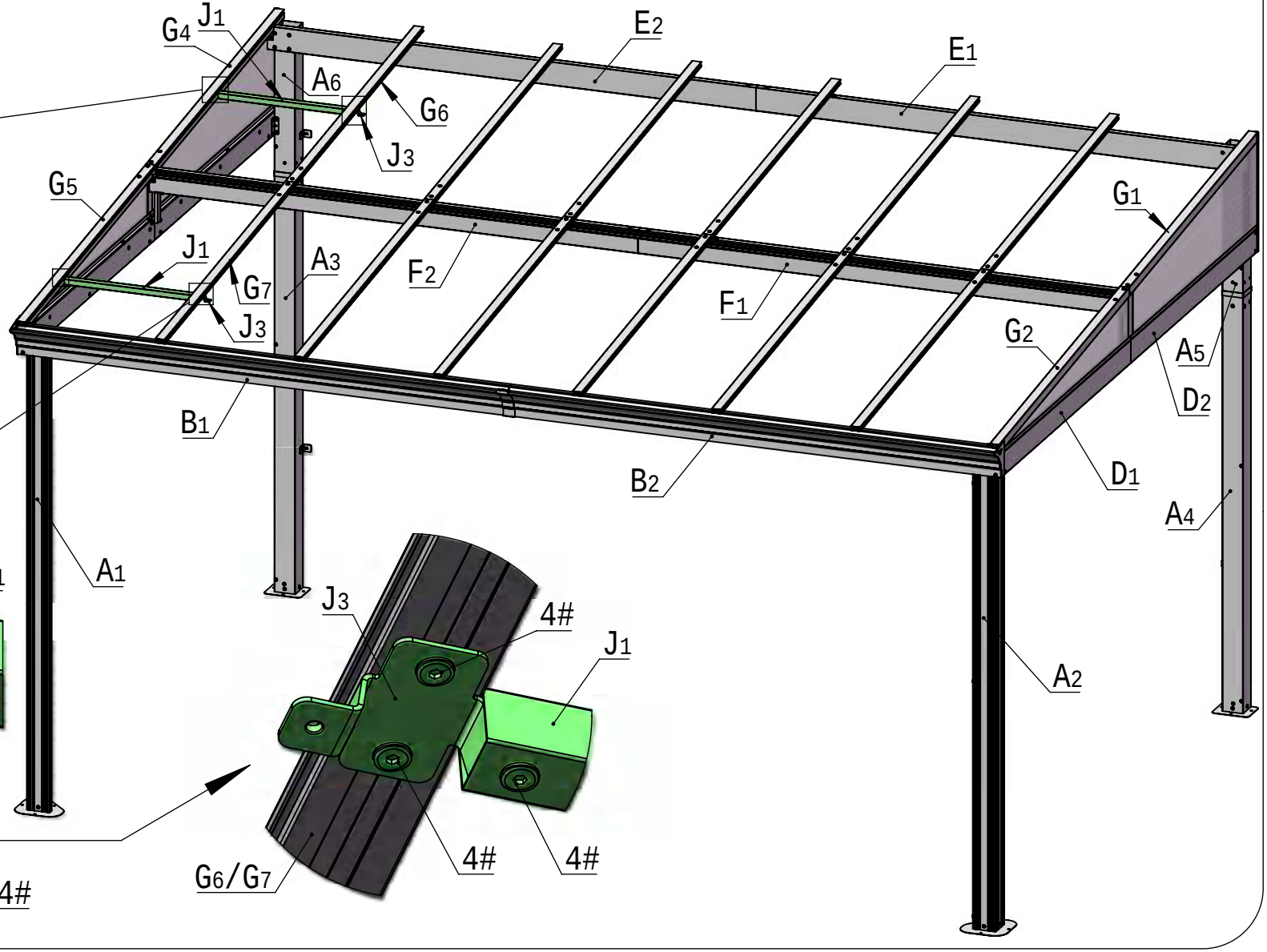

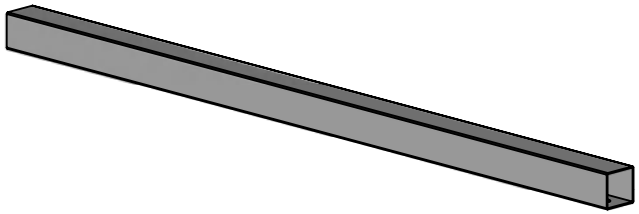

J1 12X

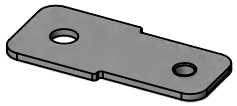

J2 2X

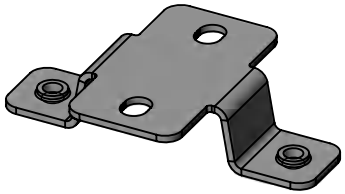

J3 10X

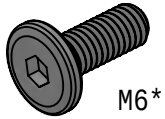

4# 46X

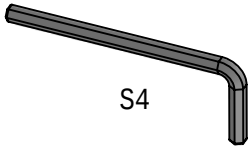

16# 1X

12X

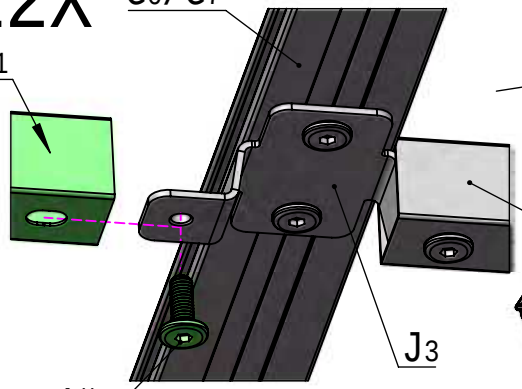

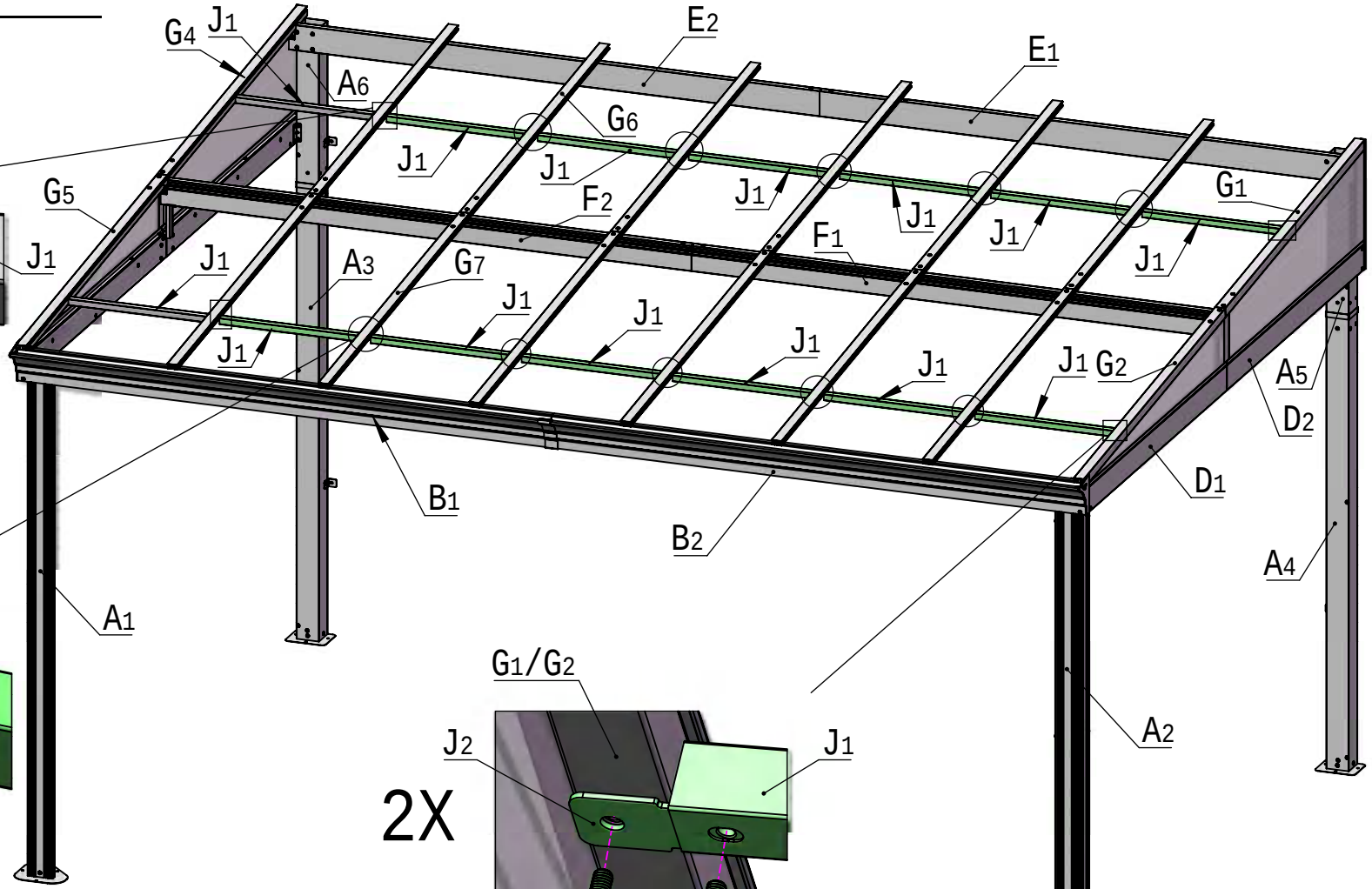

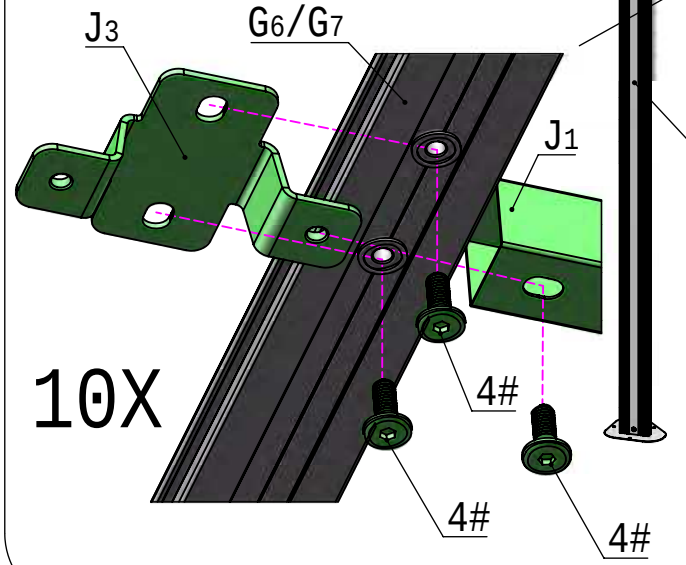



28# 1X

Note: Before installing the roof panel, make sure to remove the protective film.
Then centre the tape (#28) on the polycarbonate panel so it is equal on both sides.
Fold the tape around the edges and rub gently to avoid damaging the tape.

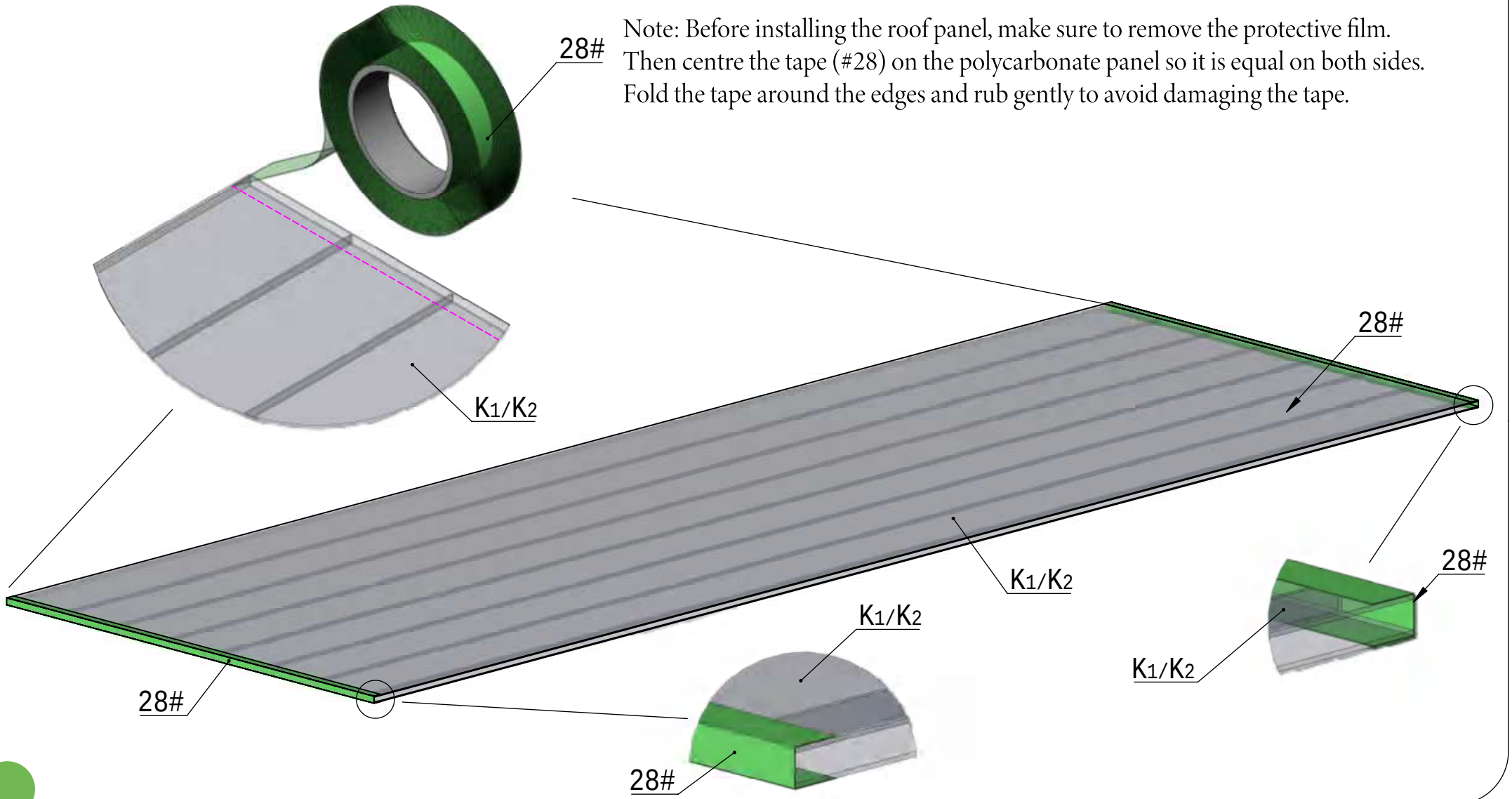

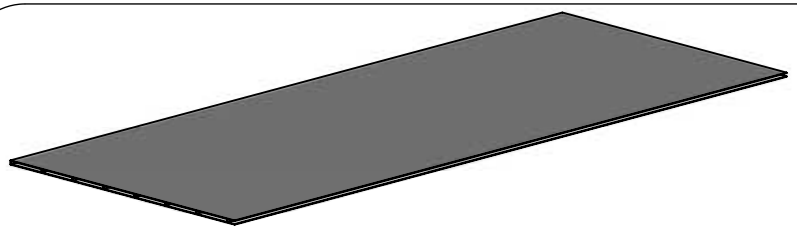

K1 1X

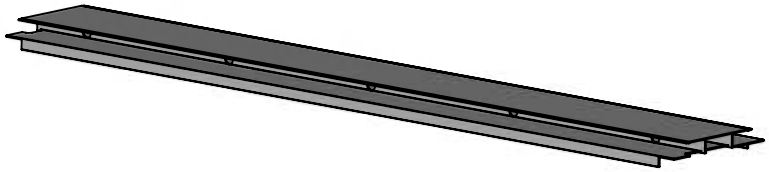

K3 1X

The upper end of the PC board should be installed flush with both sides.

Note: Install the PC board with the front side facing up.

When installing K3, the side with the drain holes face up.

Drain holes

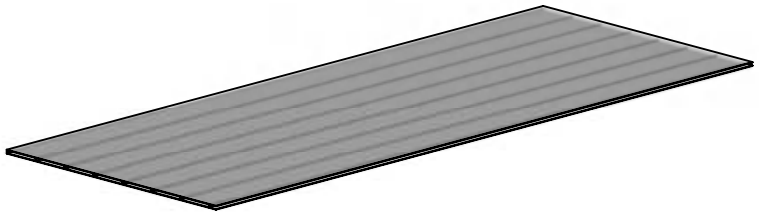

K2 1X



15# 1X

Note: Install the PC board with the front side facing up.

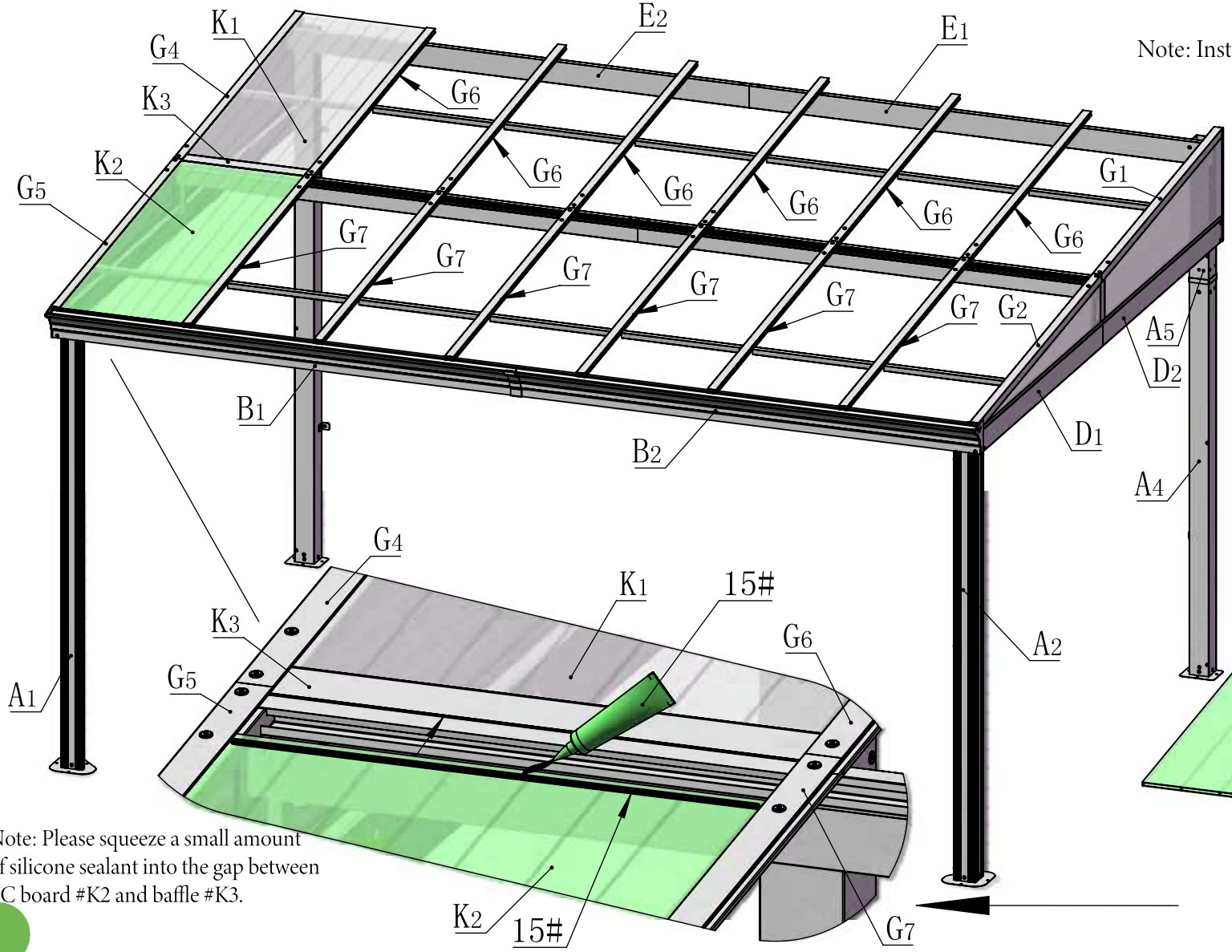

Note: Please squeeze a small amount of silicone sealant into the gap between PC board #K2 and baffle #K3.

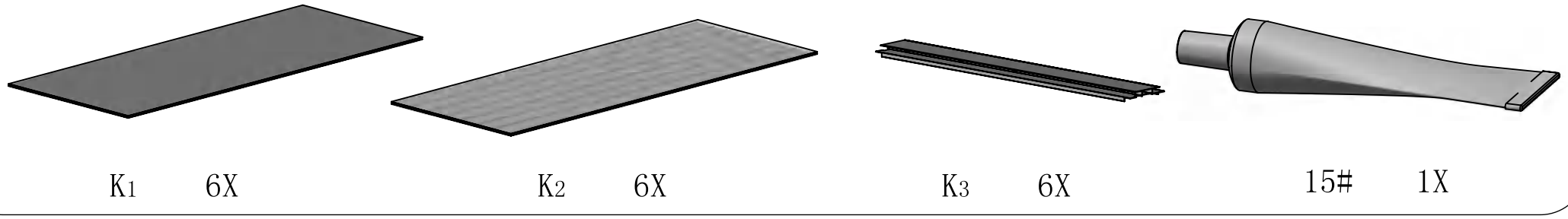

K1 6X K2 6X K3 6X 15# 1X

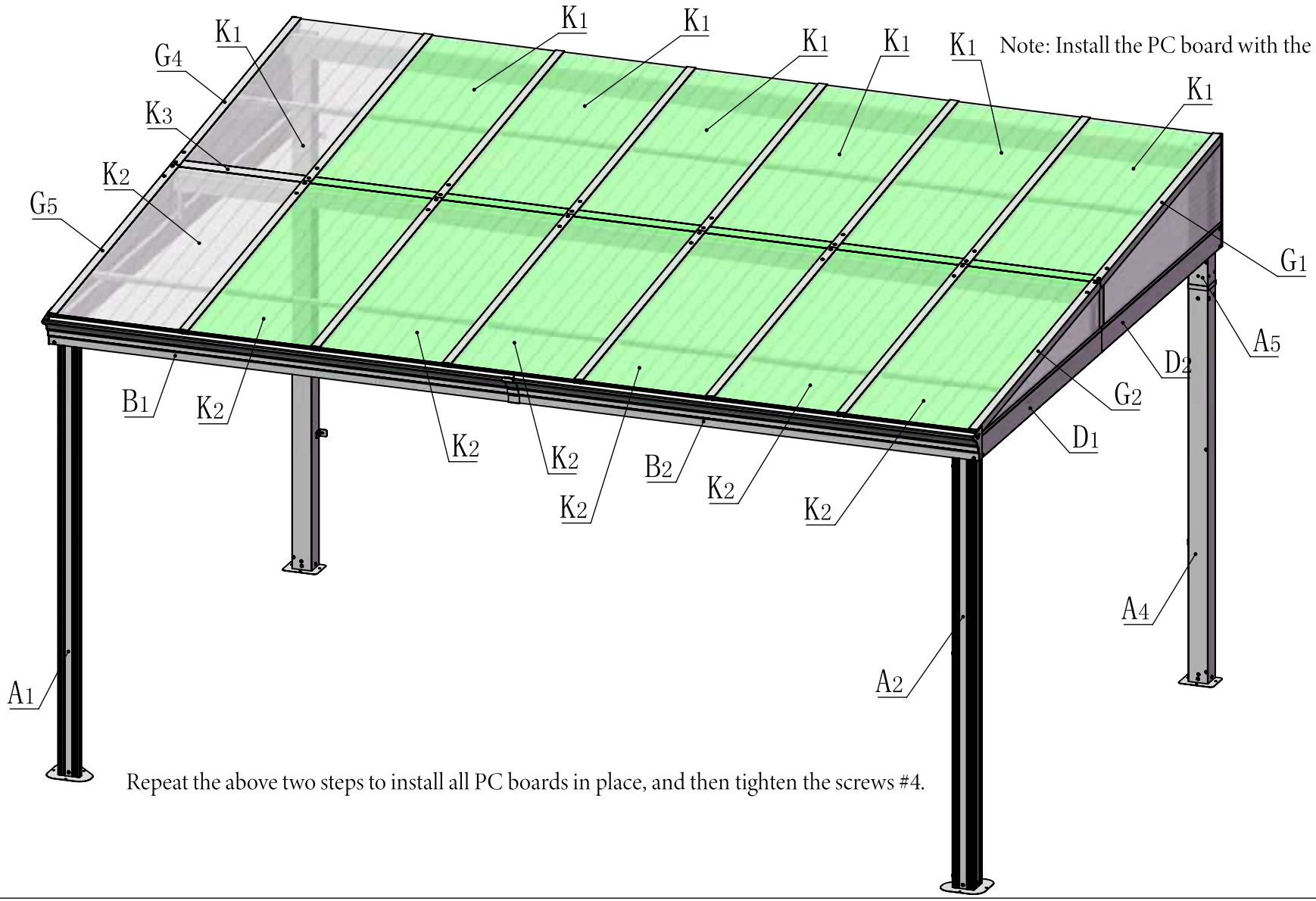

Note: Install the PC board with the front side facing up.

Repeat the above two steps to install all PC boards in place, and then tighten the screws #4.

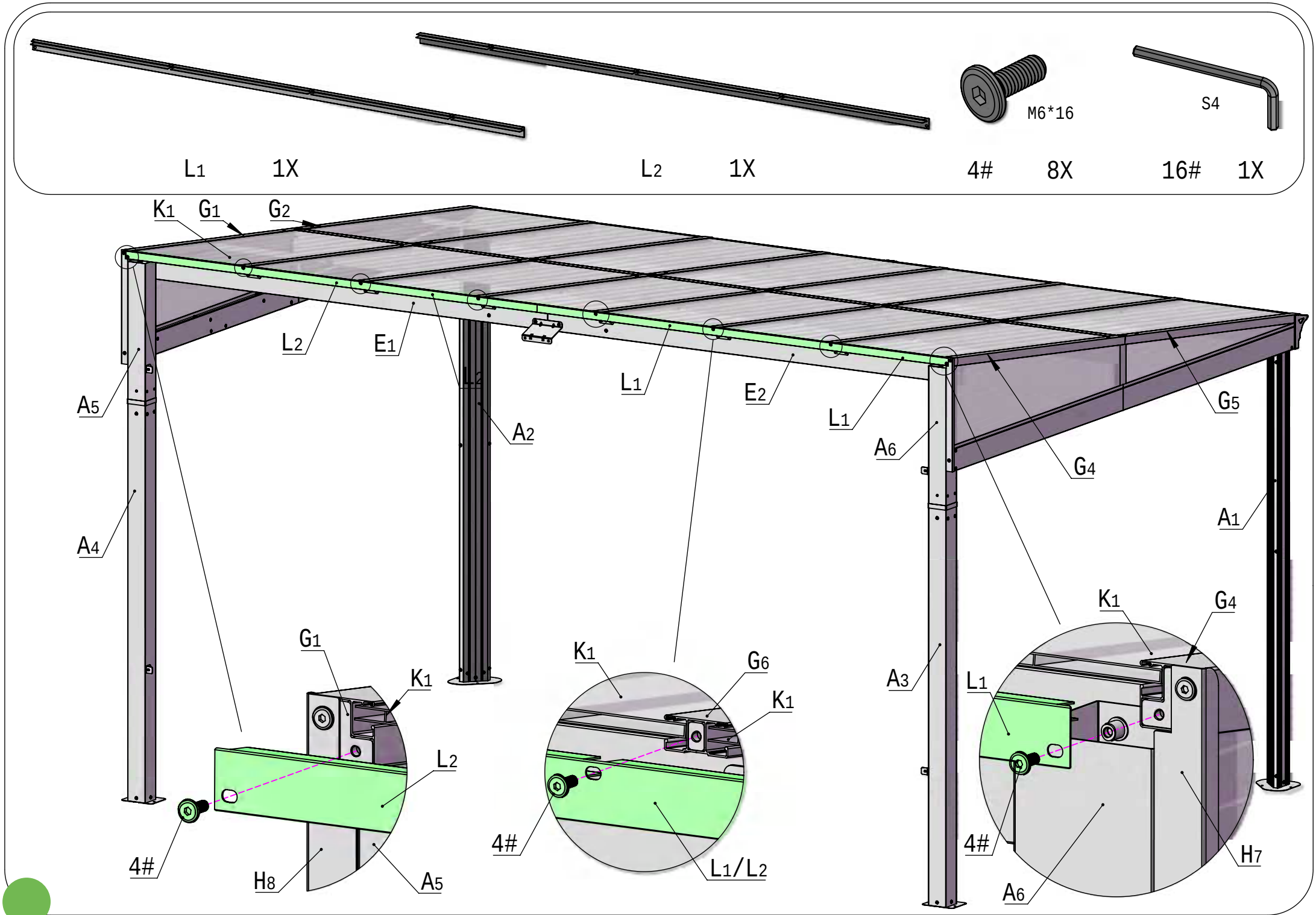
M6*16
S4
L1 1X
L2 1X
4# 8X
16# 1X
K1
G1
G2
L2
E1
L2
L1
E2
L1
G5
A5
A2
A6
G4
A4
A1
G1
K1
L2
4#
H8
A5
K1
G6
K1
4#
L1/L2
A3
K1
G4
L1
4#
H7
A6

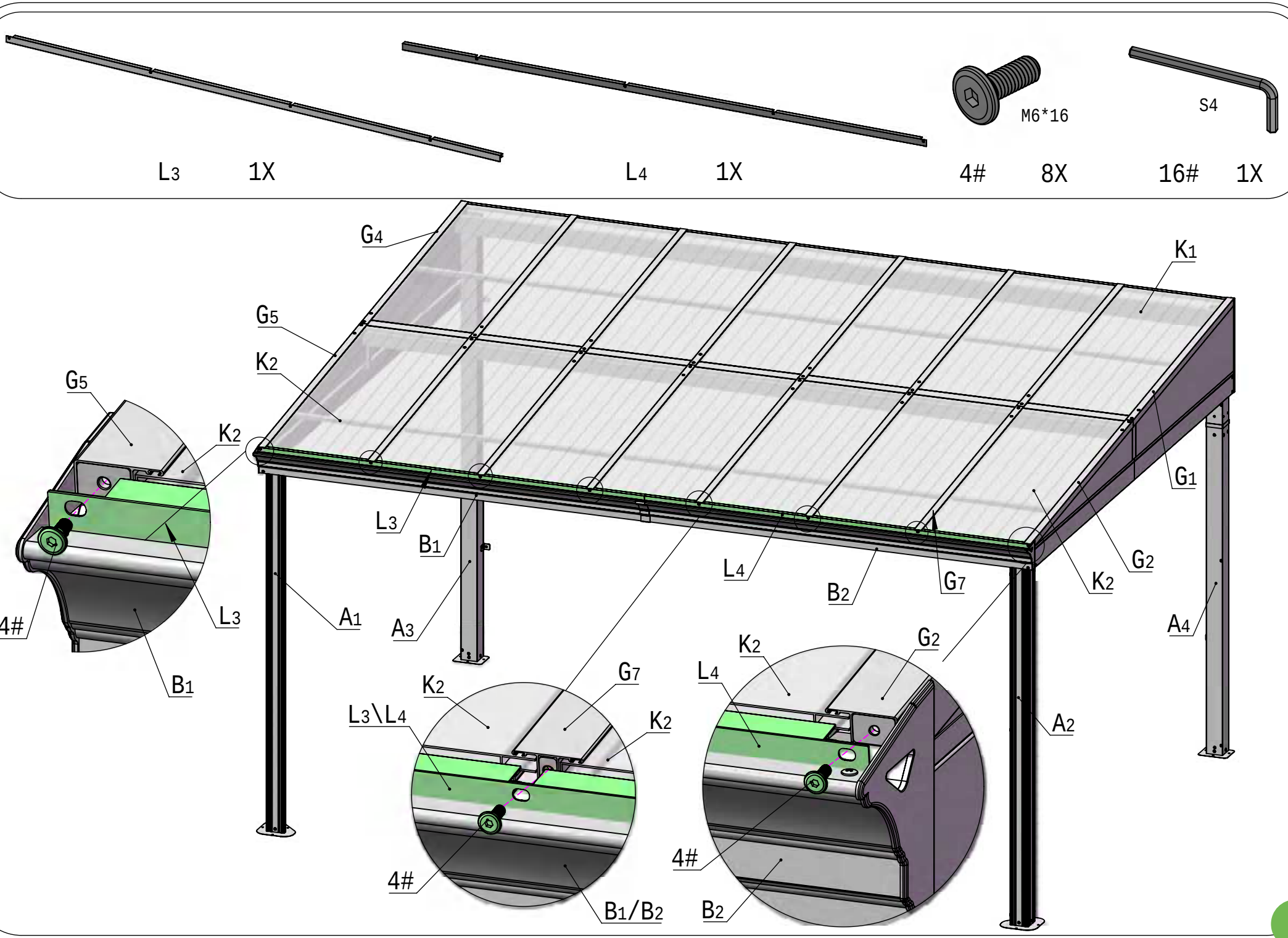
L3 1X
L4 1X
4# 8X
M6*16
16# 1X
S4
G4
K1
G5
K2
G5
K2
L3
B1
A3
A1
L4
B2
G7
K2
G2
G1
A4
4#
L3
B1
K2
G7
L3\L4
K2
4#
B1/B2
K2
G2
L4
A2
4#
B2

Support Tube Assembly

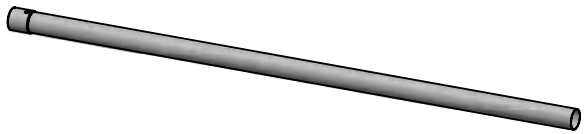

M1 1X

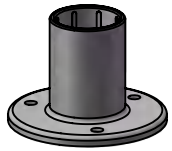

M3 1X

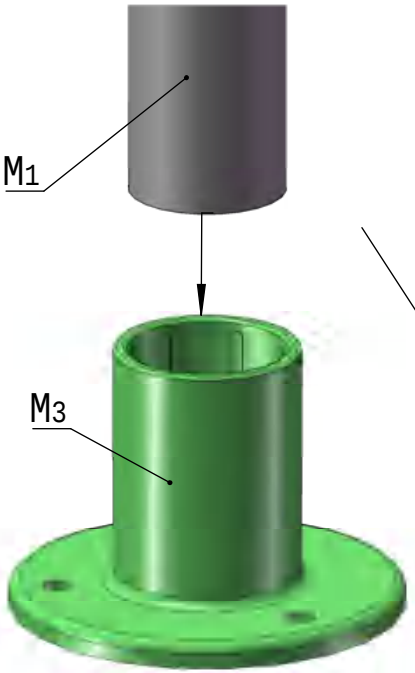

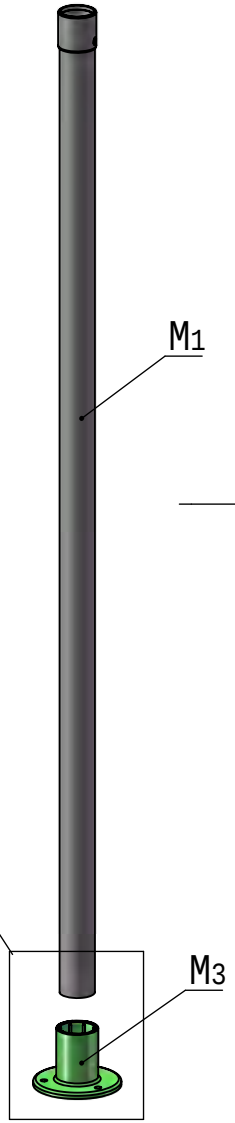

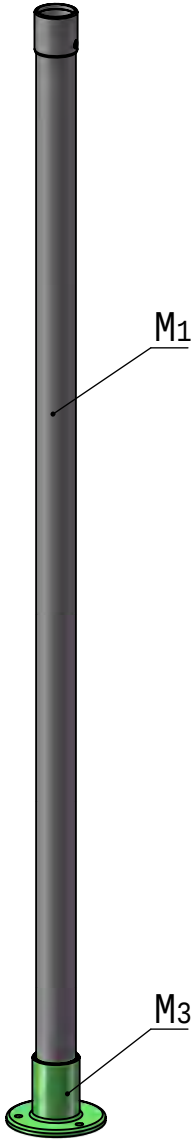



M2 1X

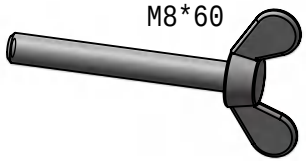

12# 1X

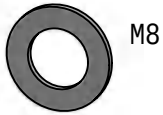

13# 1X

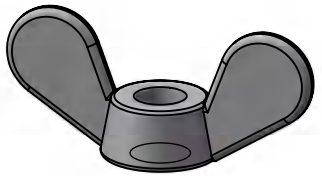

14# 1X

Adjust the length of the support tubes according to the slope.

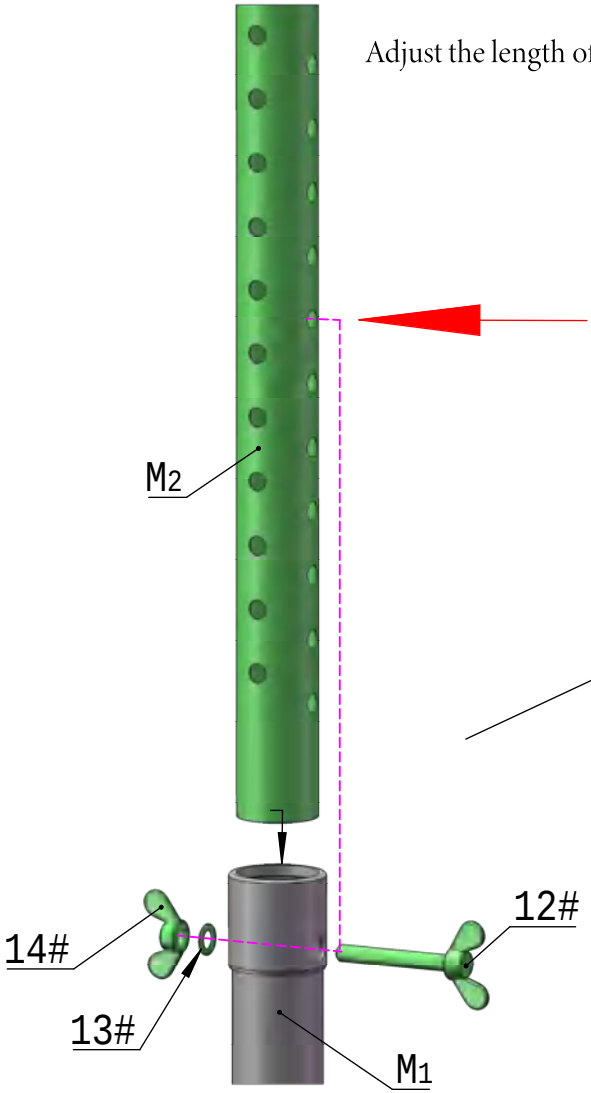

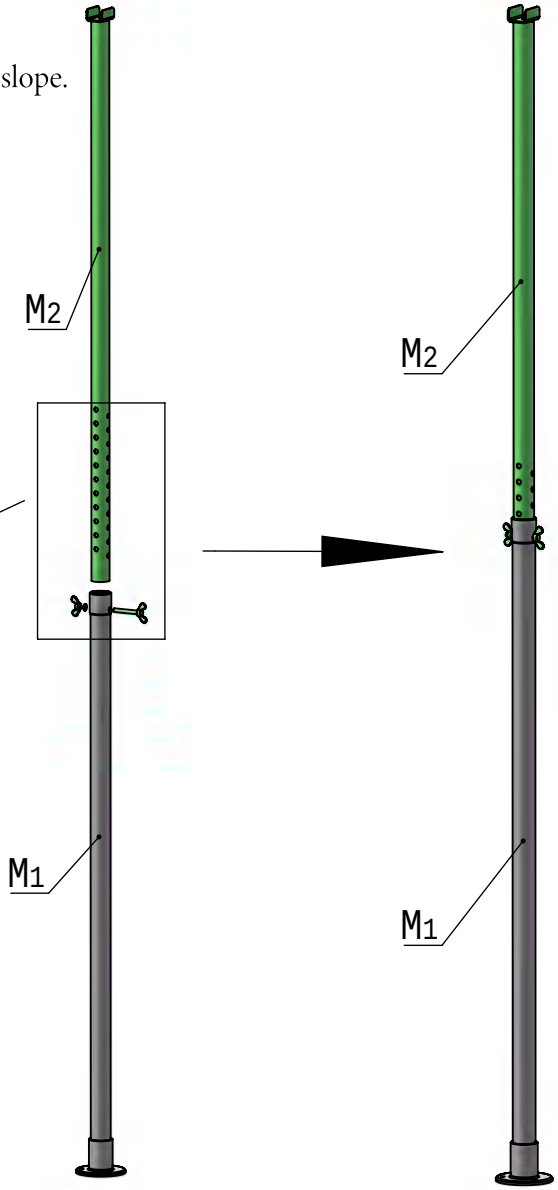

The support tube can strengthen the weight capacity of the metal roof.
In bad weather, especially snowstorm, the support tube is essentially needed to prevent the roof from collapsing under heavy snow.
In daily life, you can put it away.

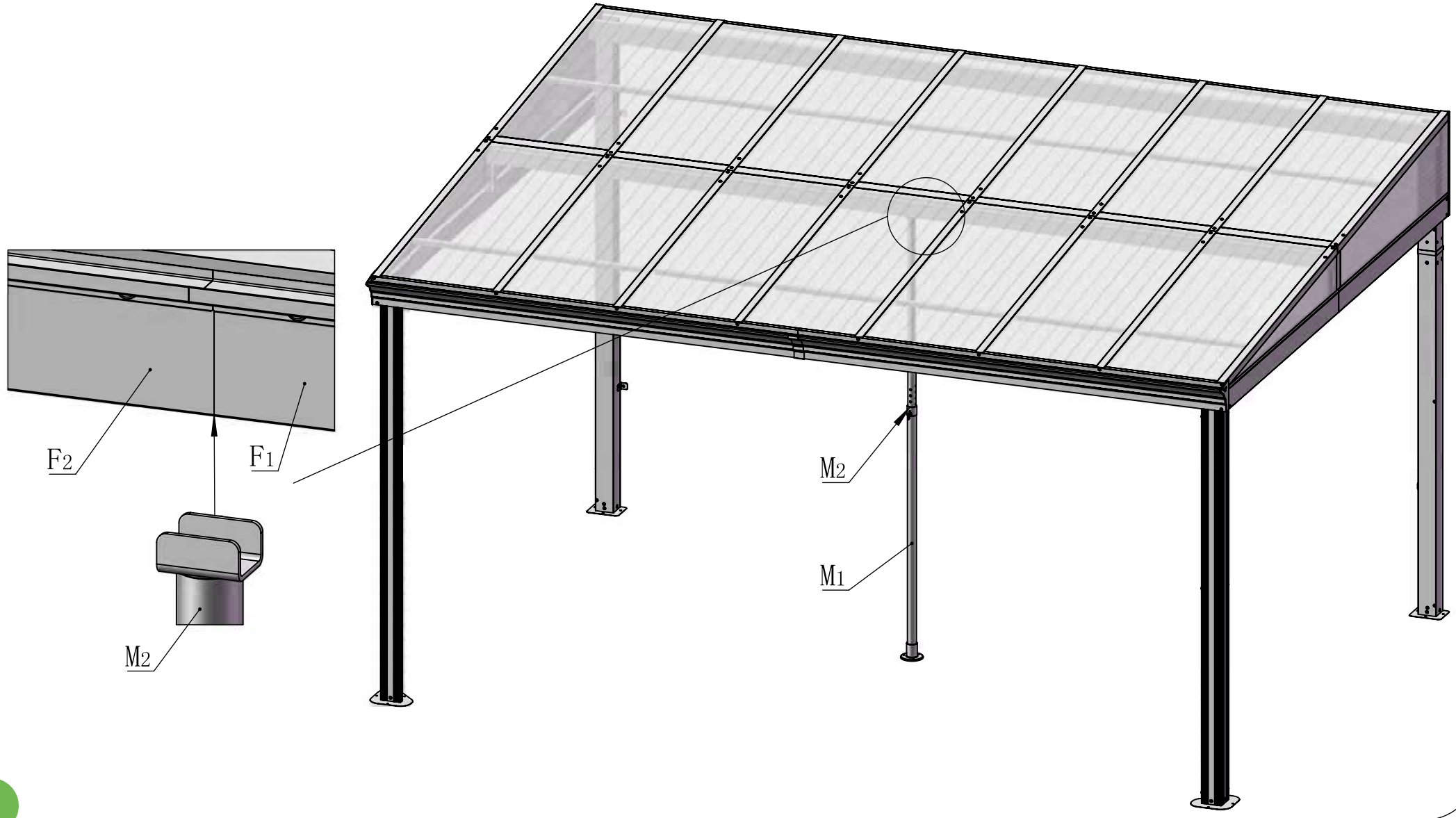

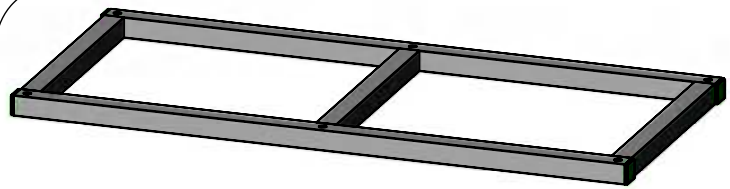

N1 6X

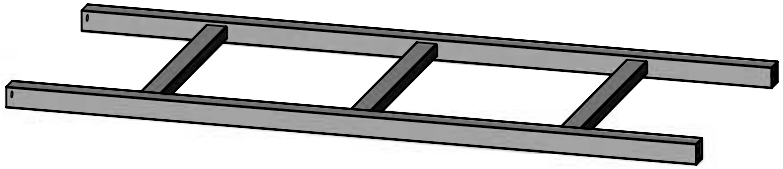

N2 3X



3# 12X

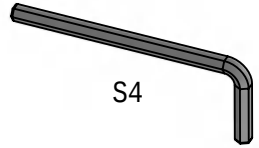

16# 1X

3X

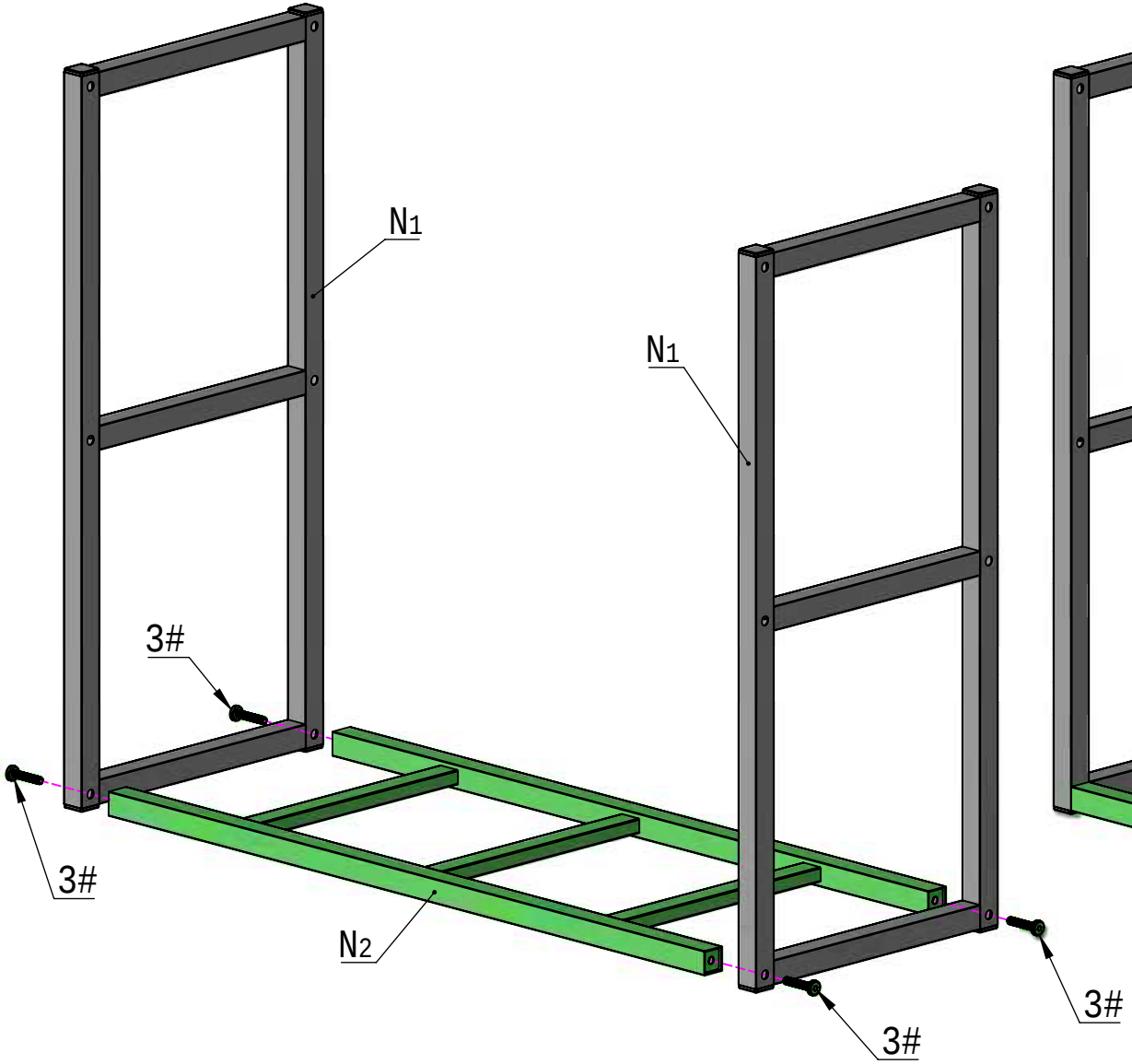

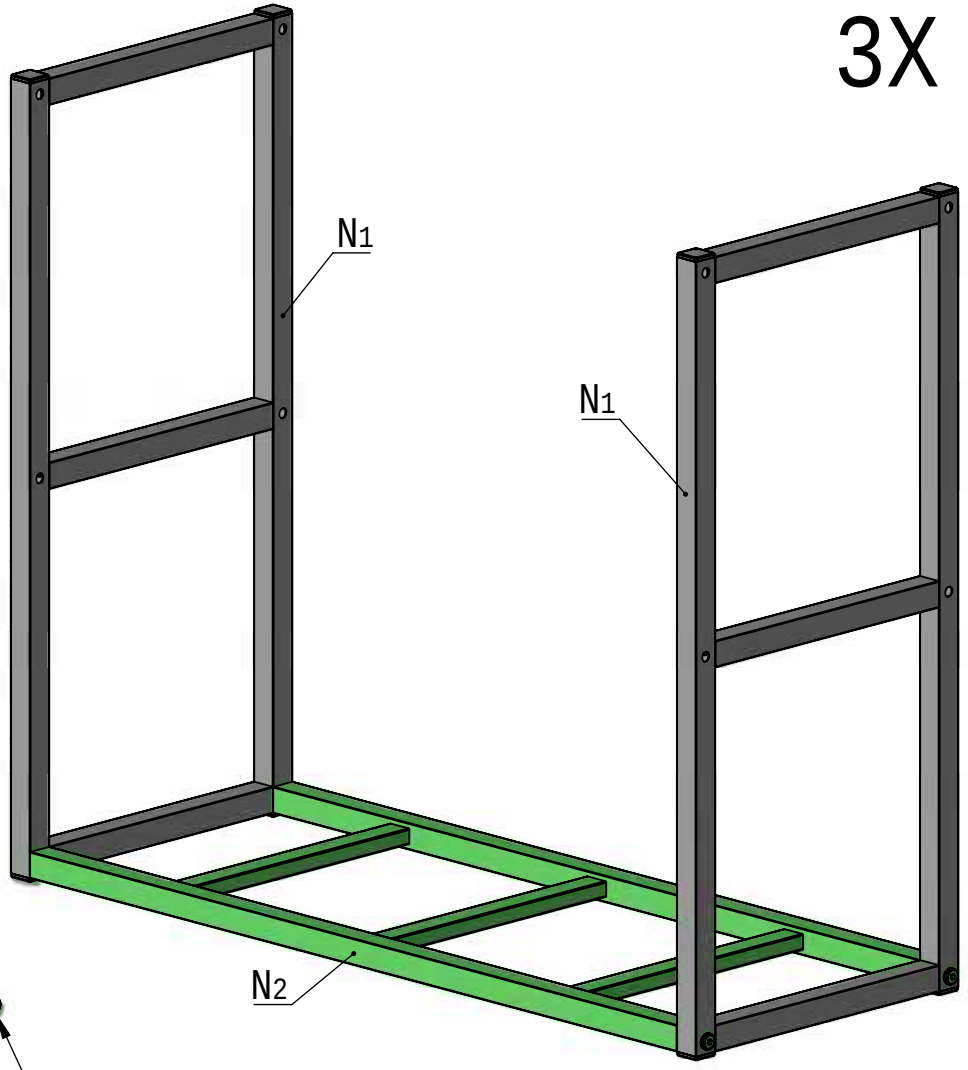

Position the screws, but do not tighten them.

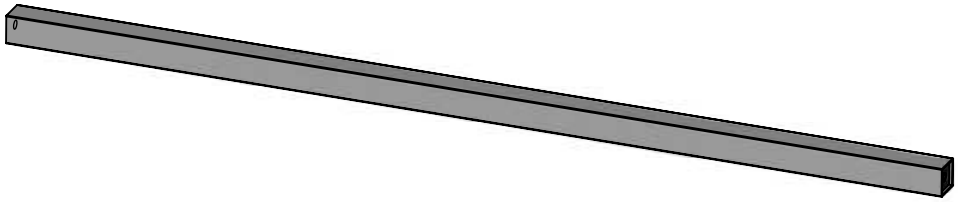

N3 12X

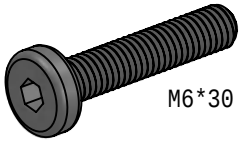

3# 24X

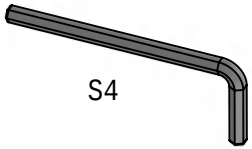

16# 1X

3X

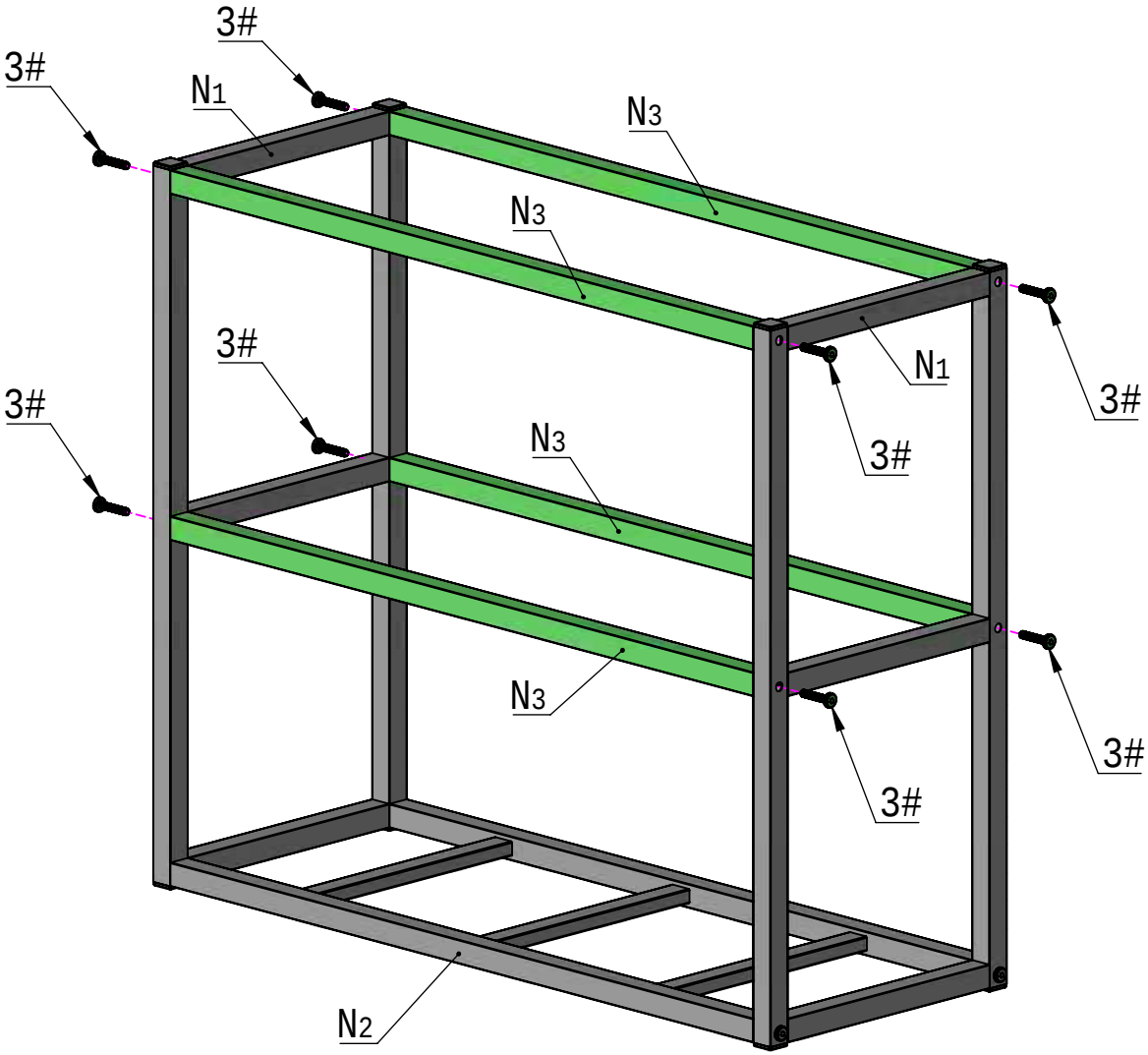

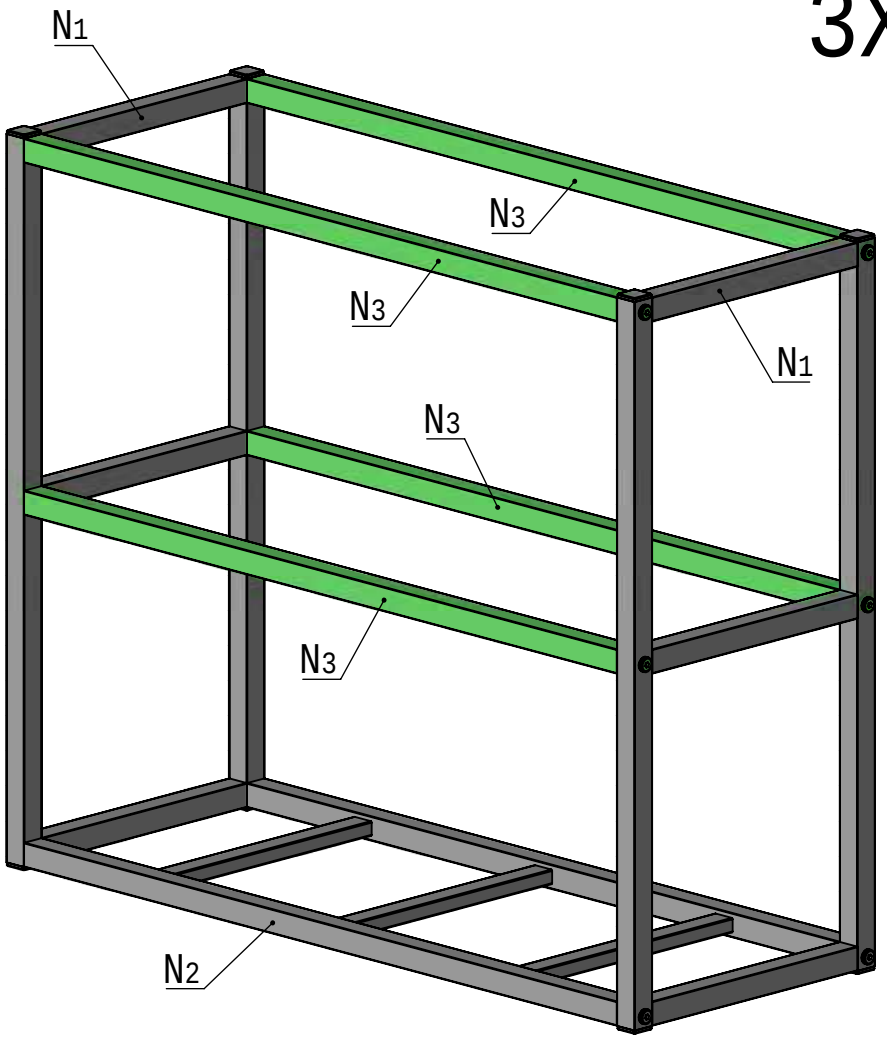

Tighten all screws after they are positioned.

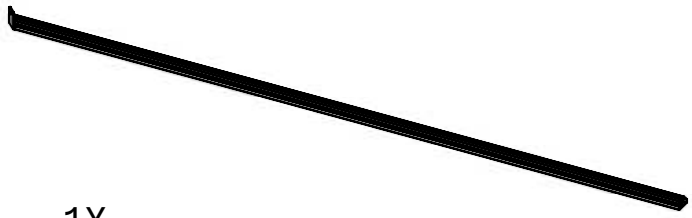

01 1X

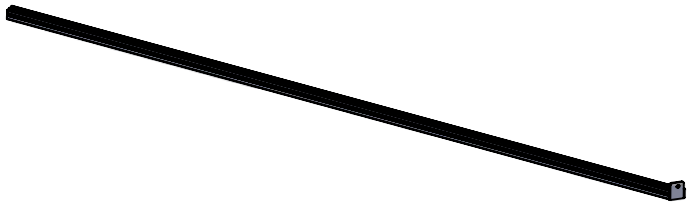

02 1X



24# 8X

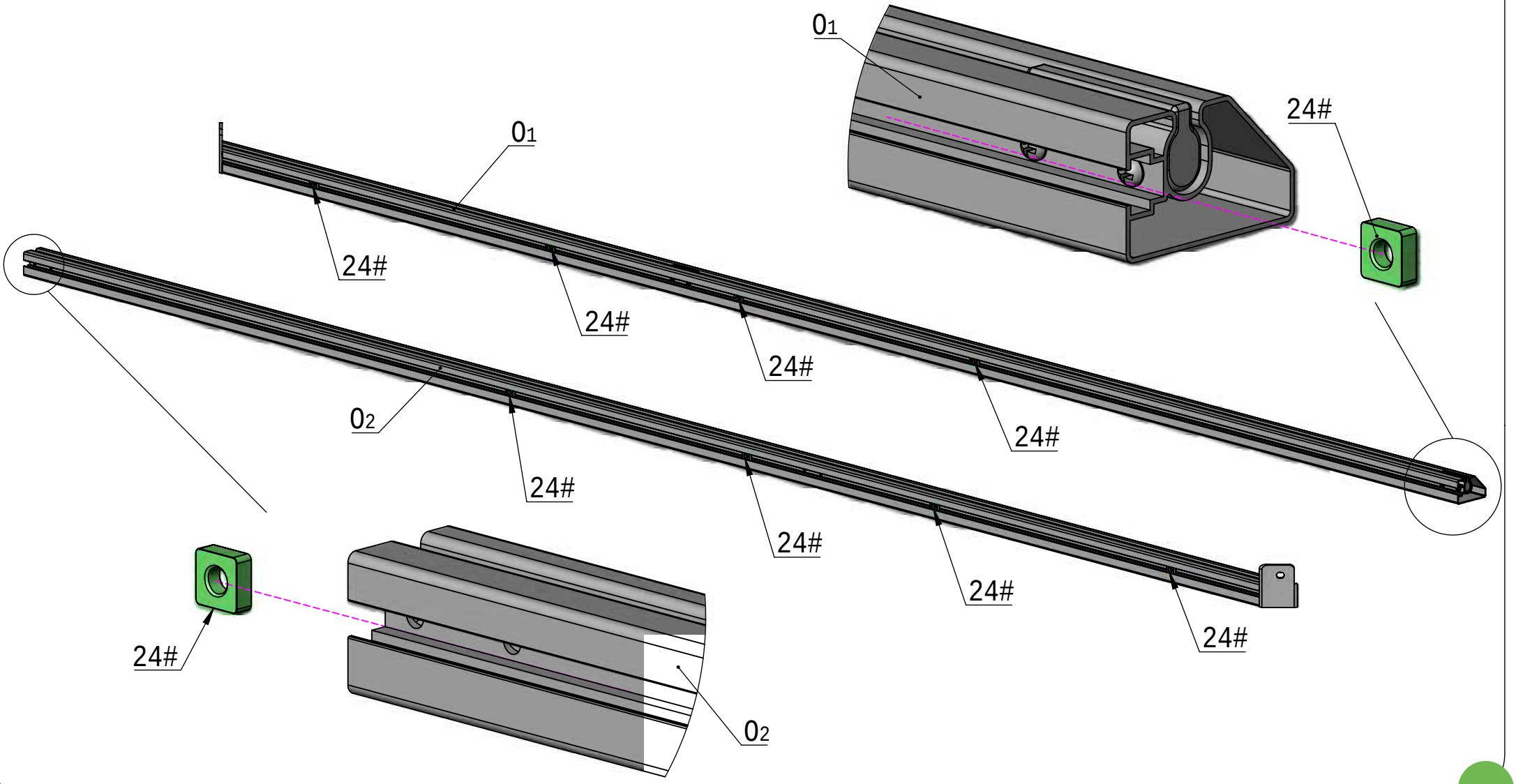

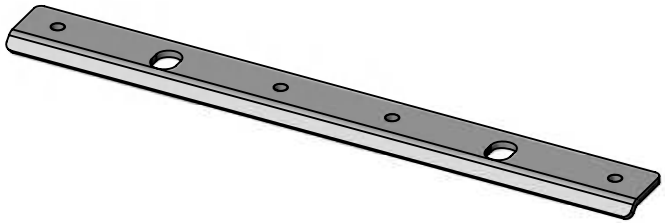

03 1X

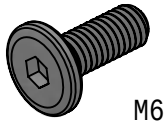

M6*16

4# 4X

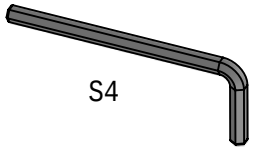

S4

16# 1X

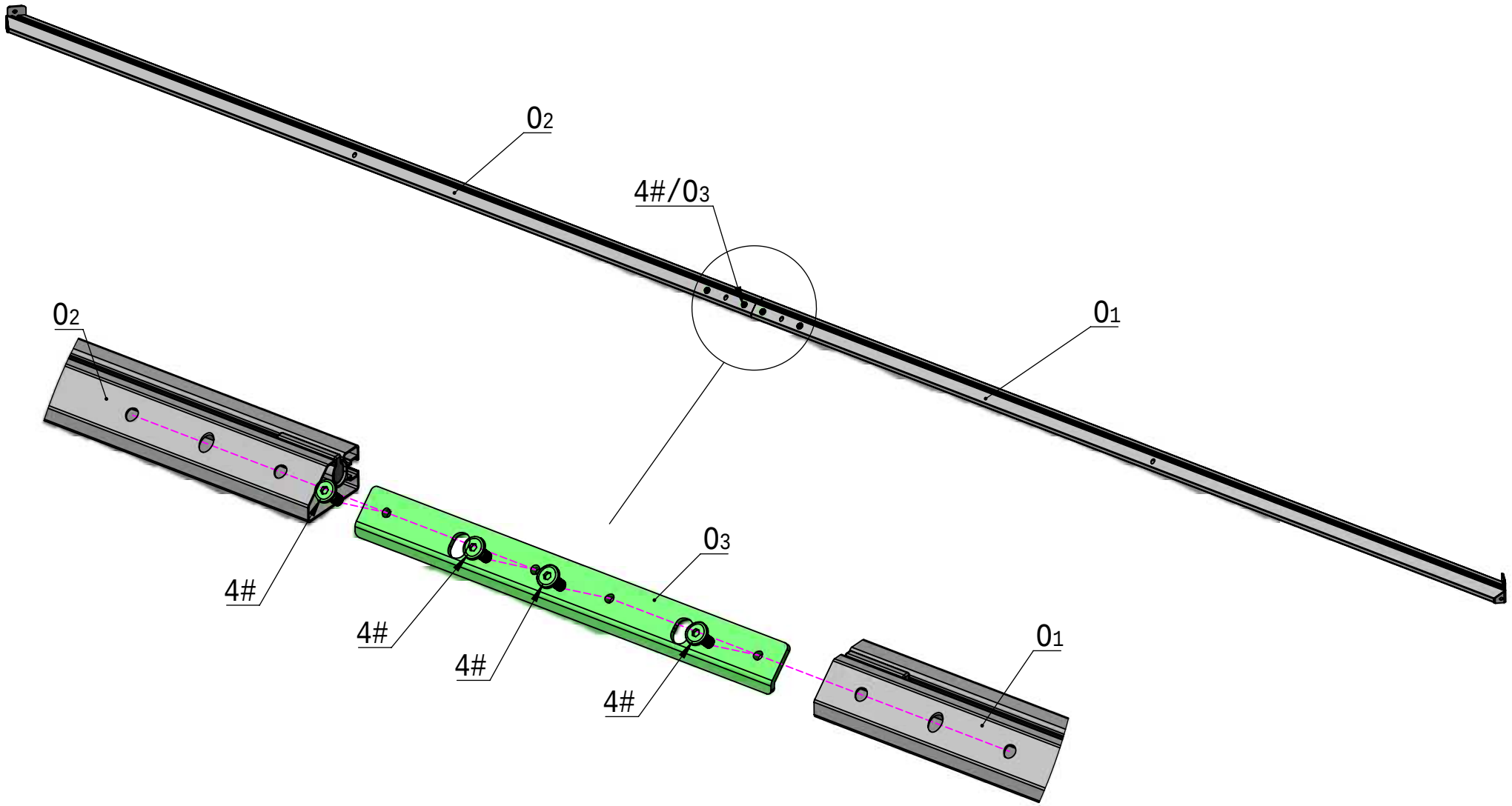



04 1X

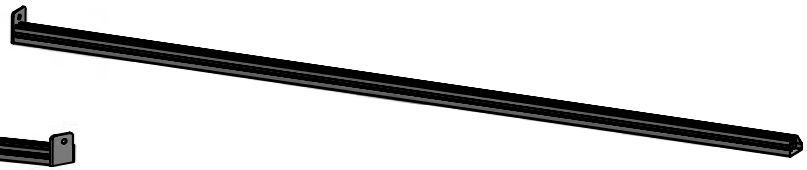

05 1X

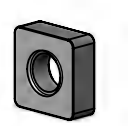

24# 6X

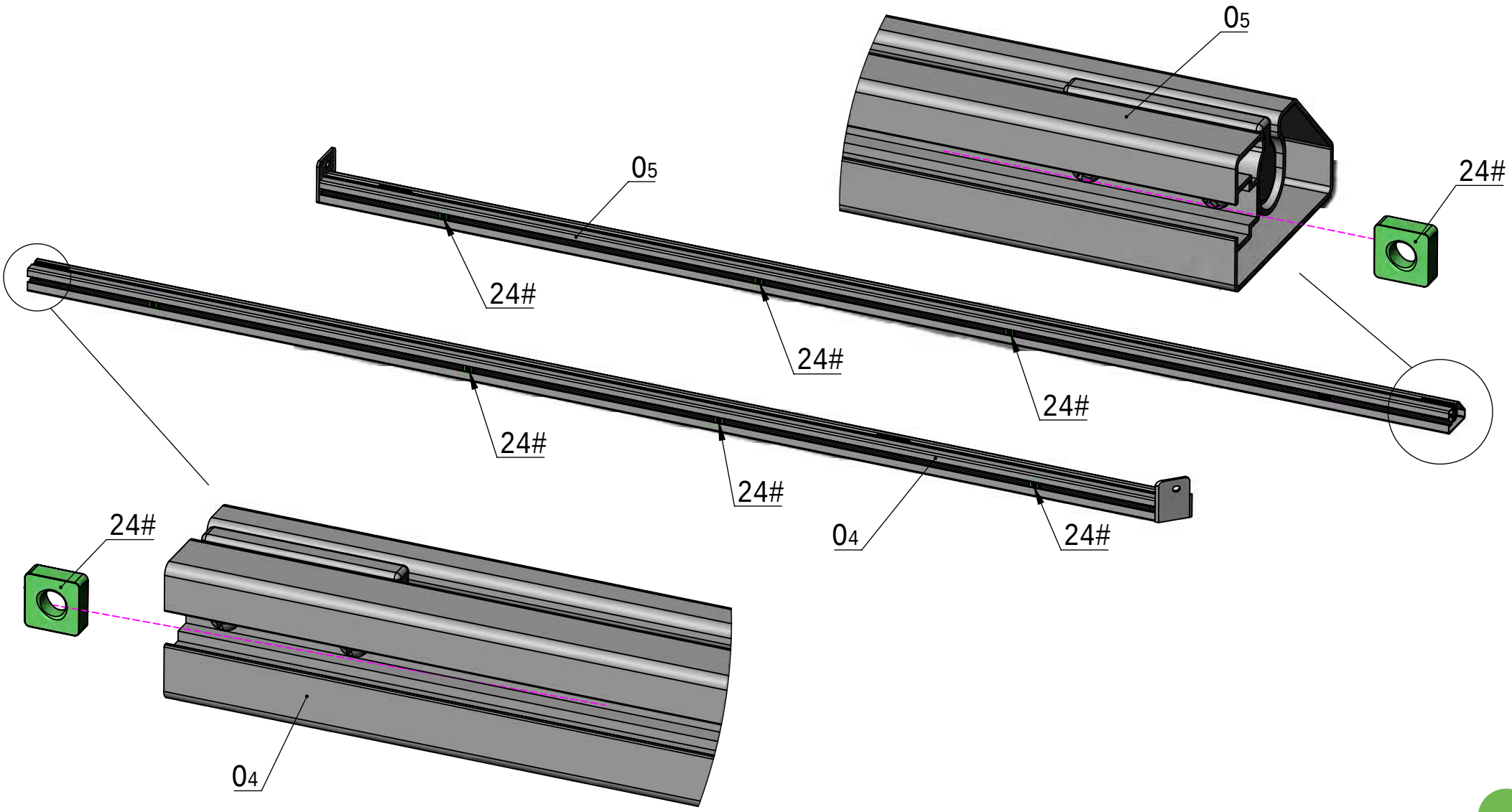

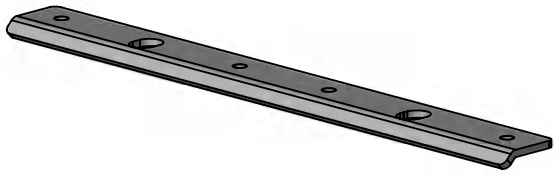

03 1X

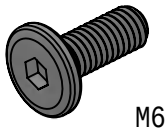

M6*16

4# 4X

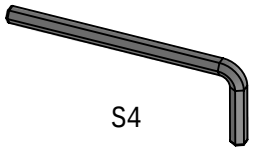

S4

16# 1X

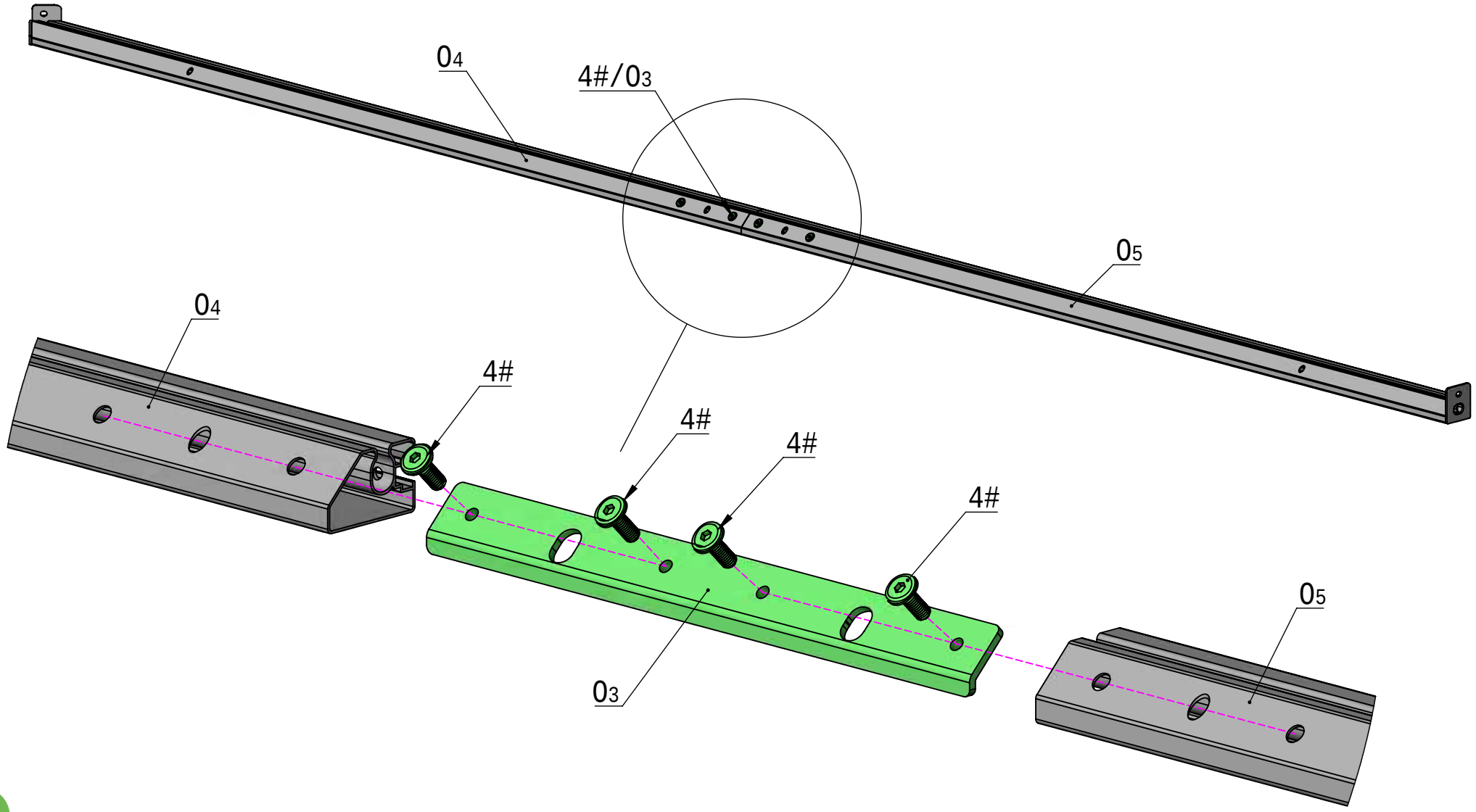

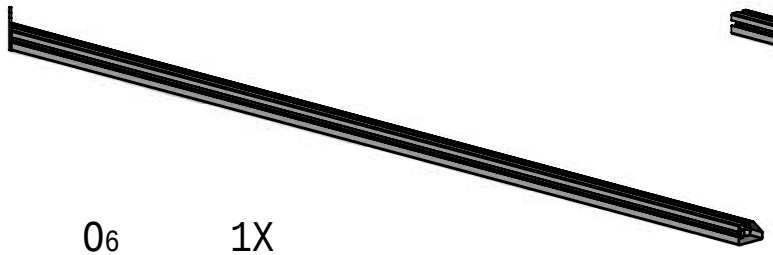

06 1X

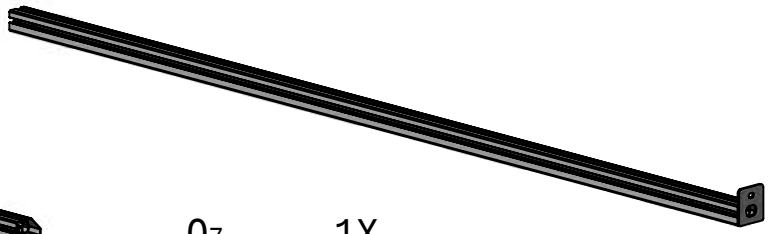

07 1X



24# 6X

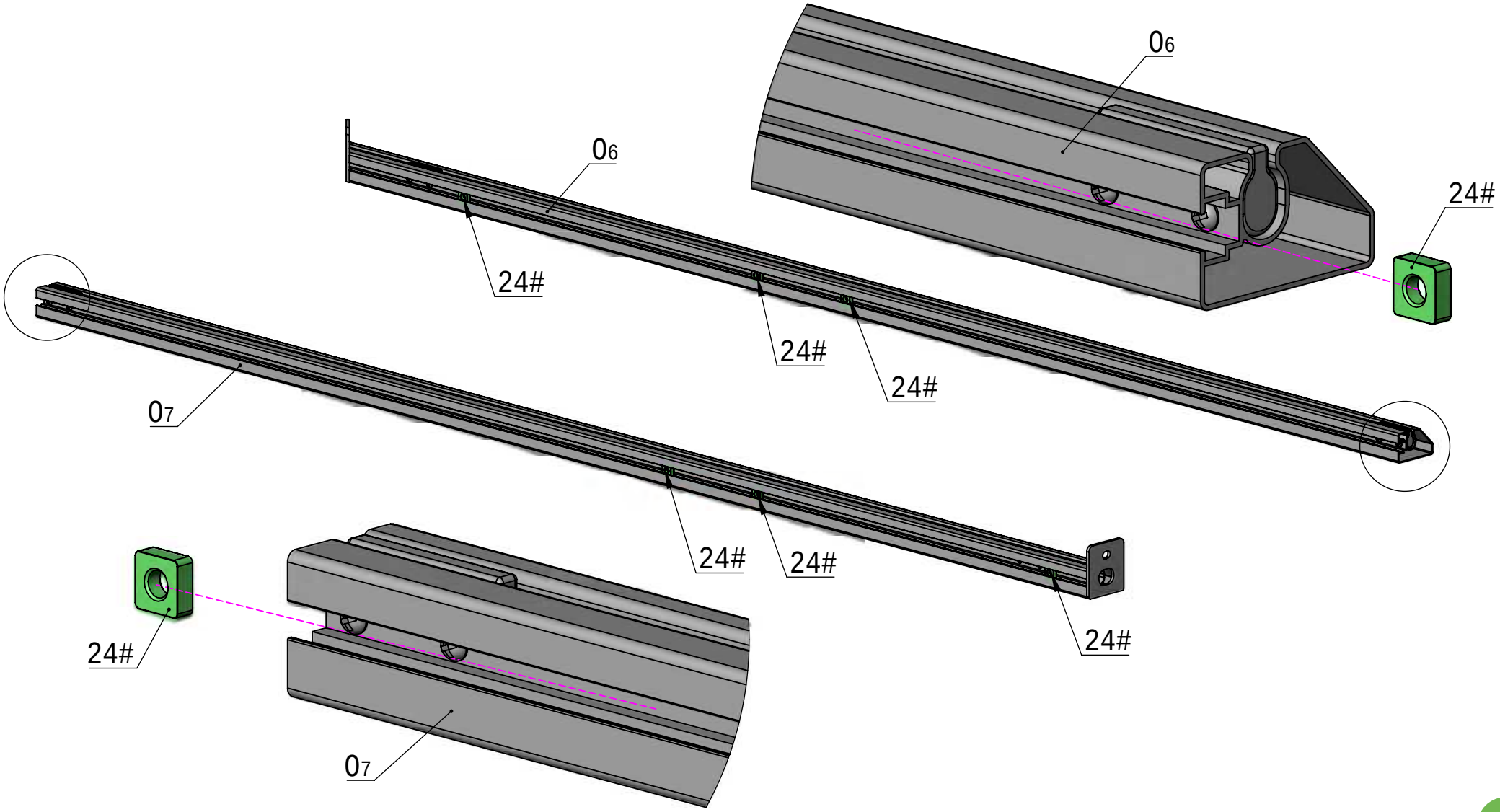

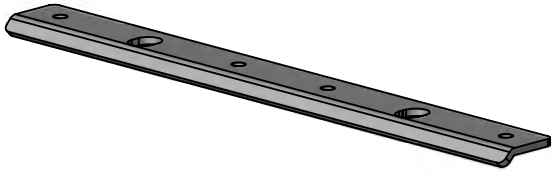

03 1X

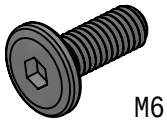

4# 4X

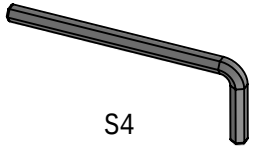

16# 1X

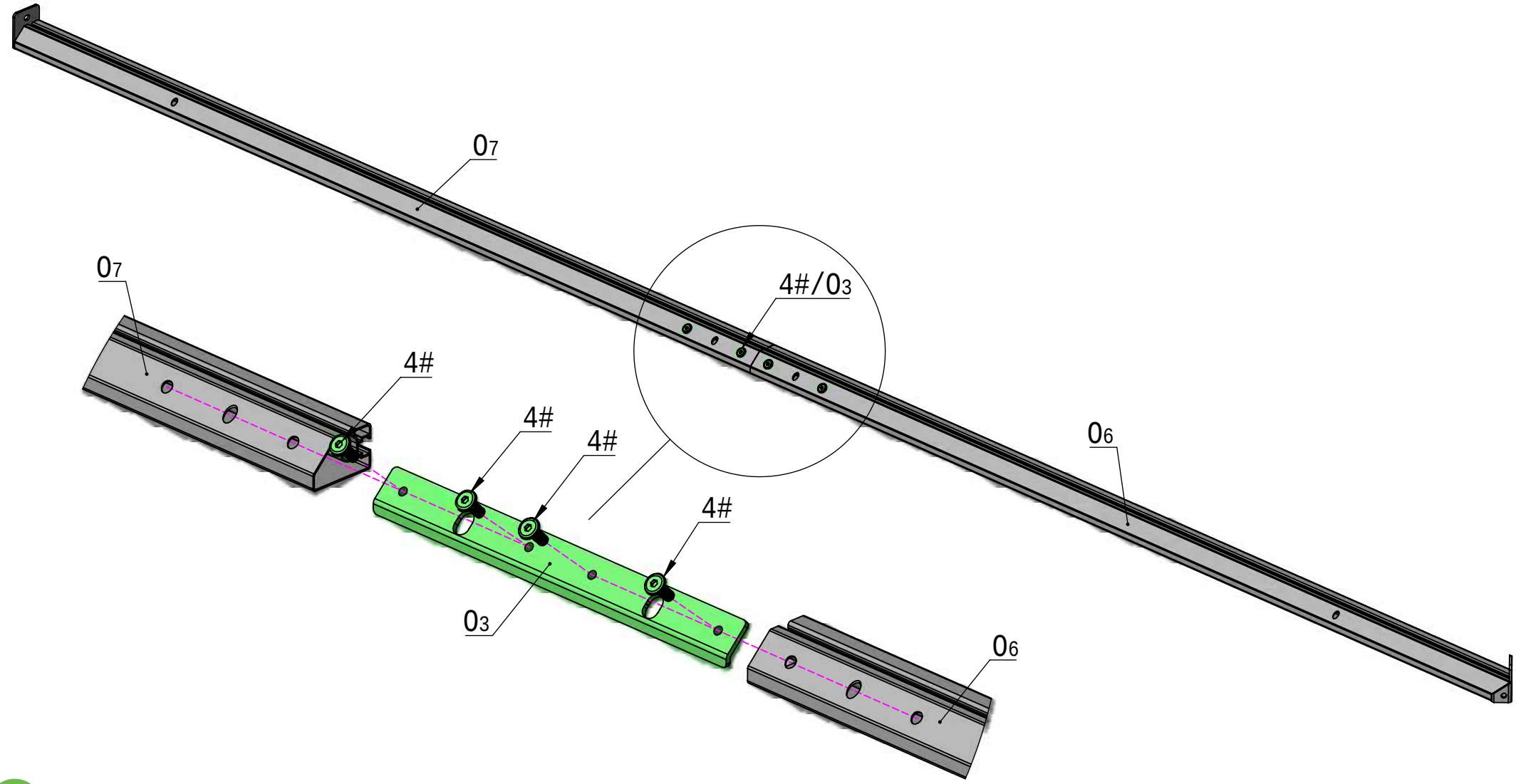

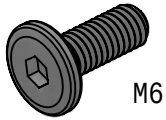

M6*16

4# 2X

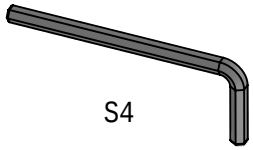

S4

16# 1X

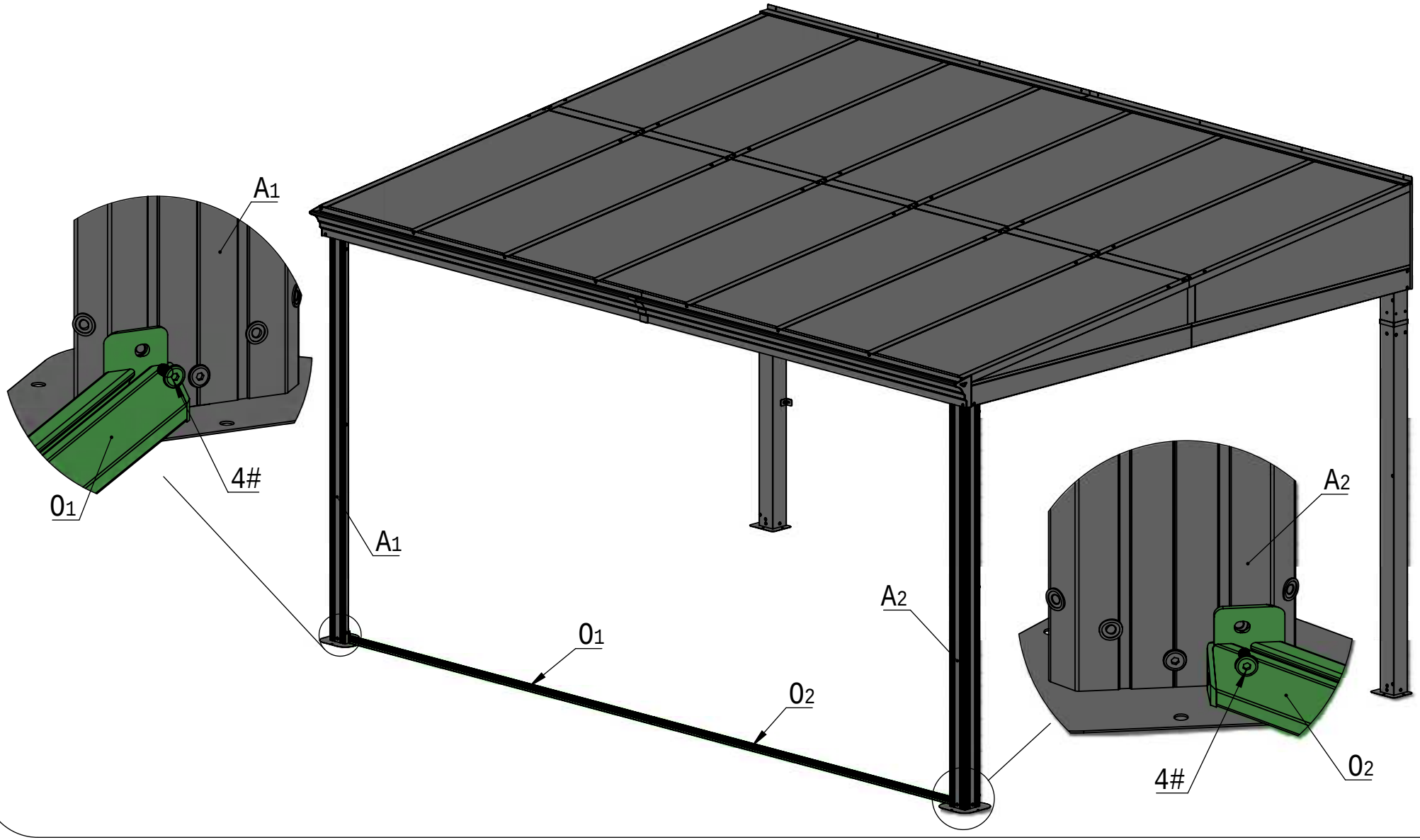

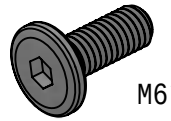

M6*16

4# 4X

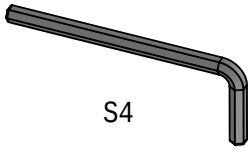

S4

16# 1X

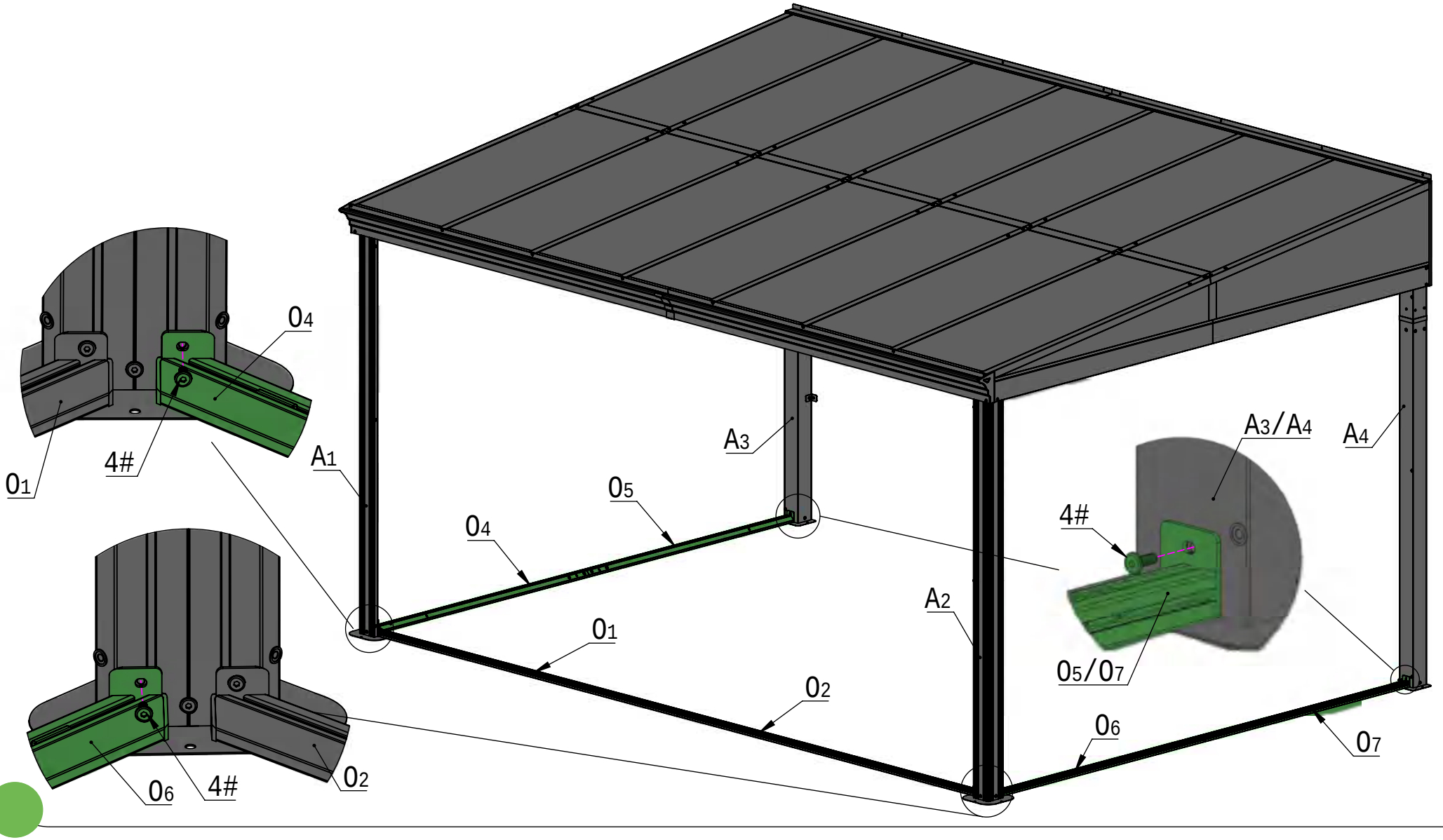

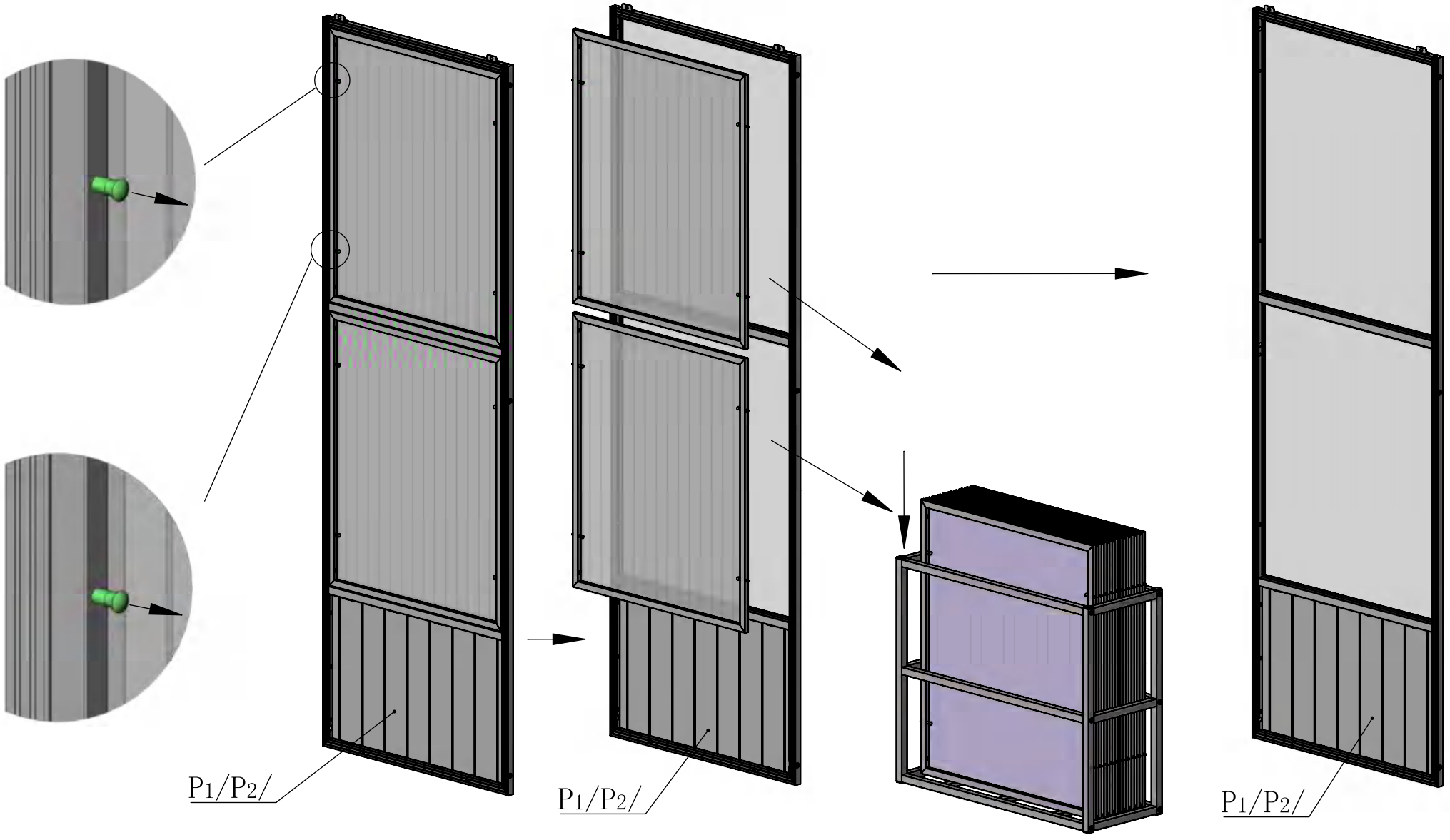
P1/P2/
P1/P2/
P1/P2/

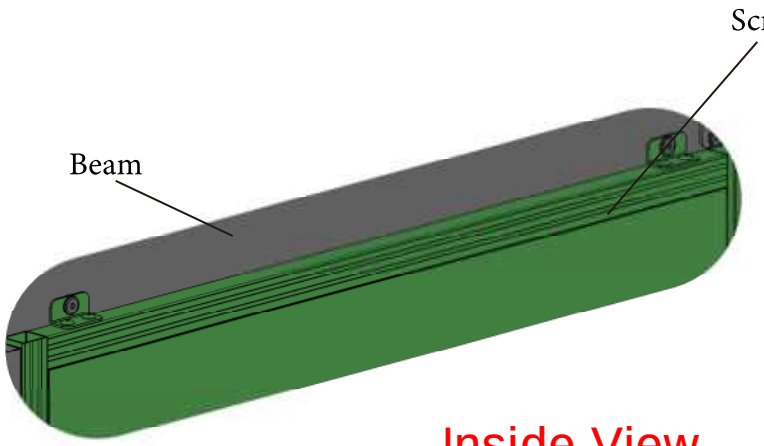

Inside View

The removable windows should be installed outwards while the screen is inwards.

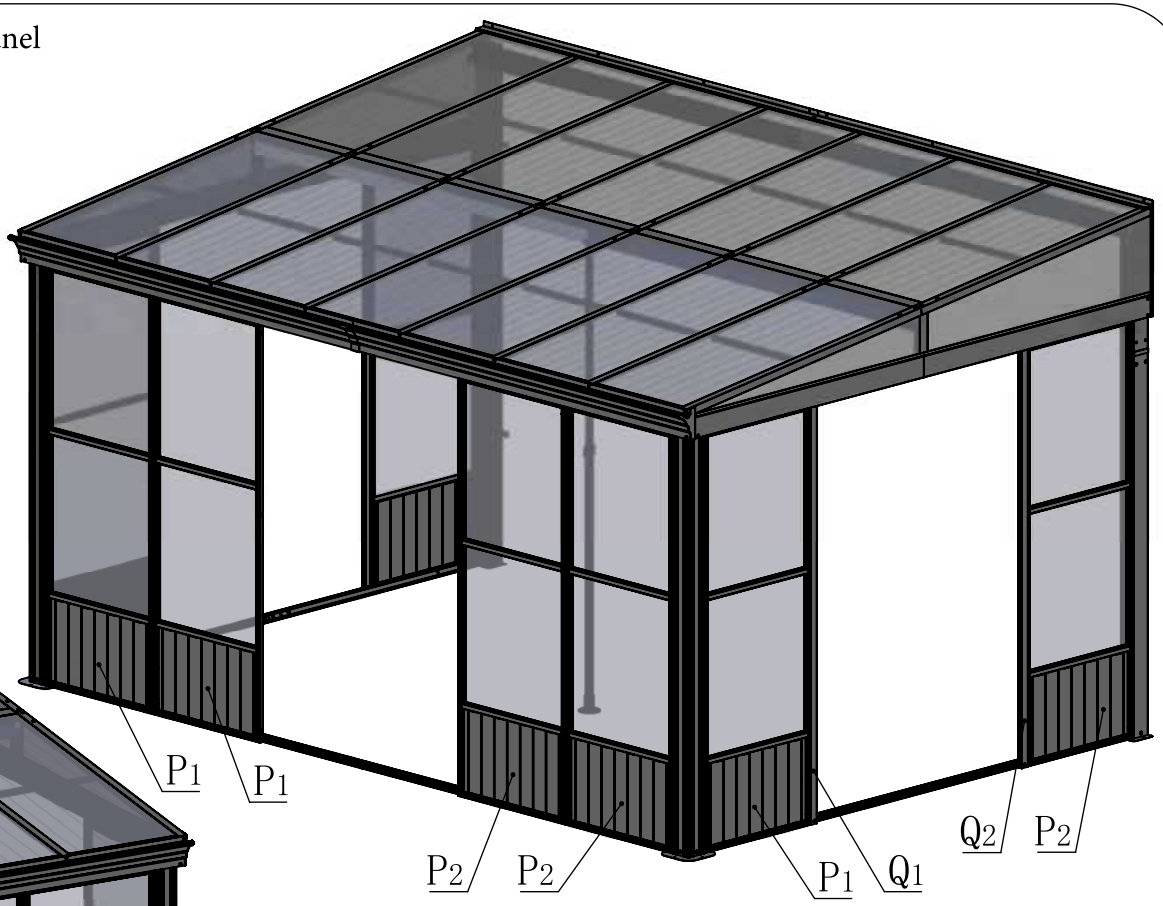

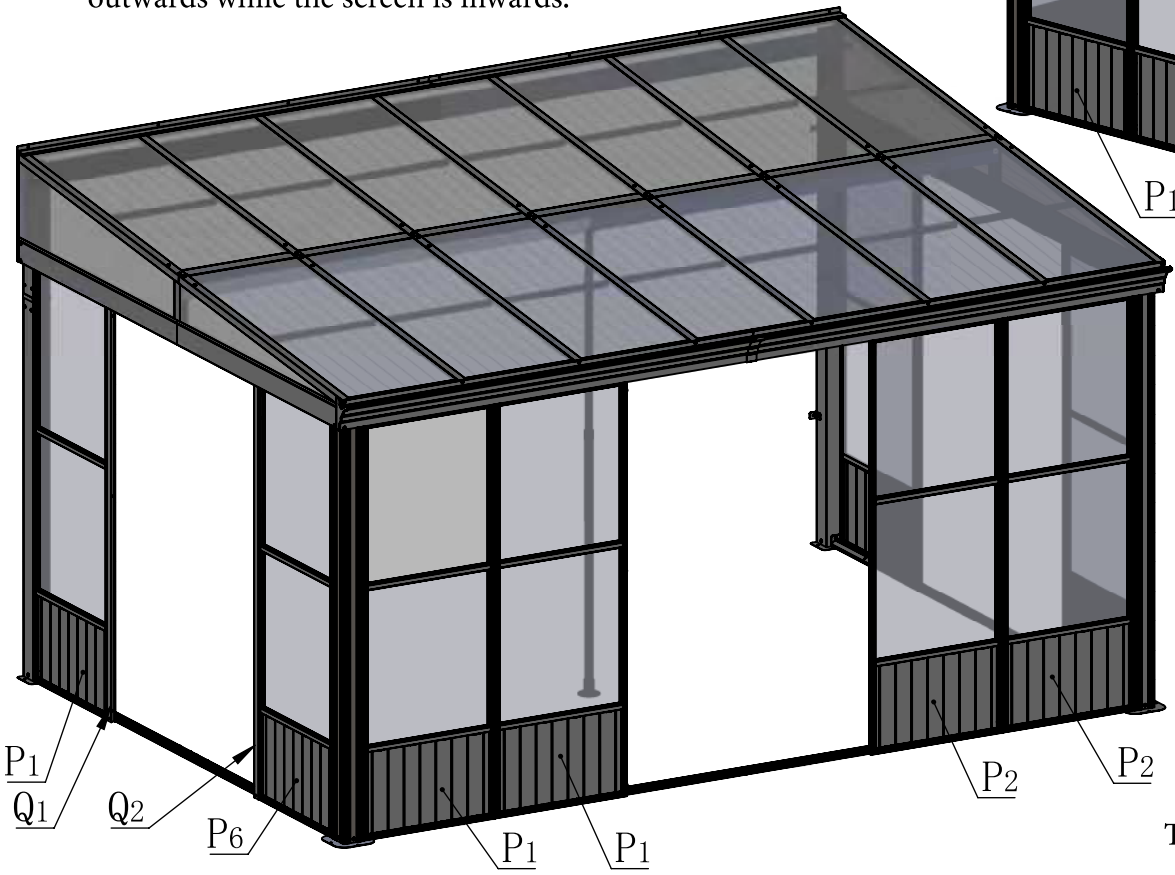

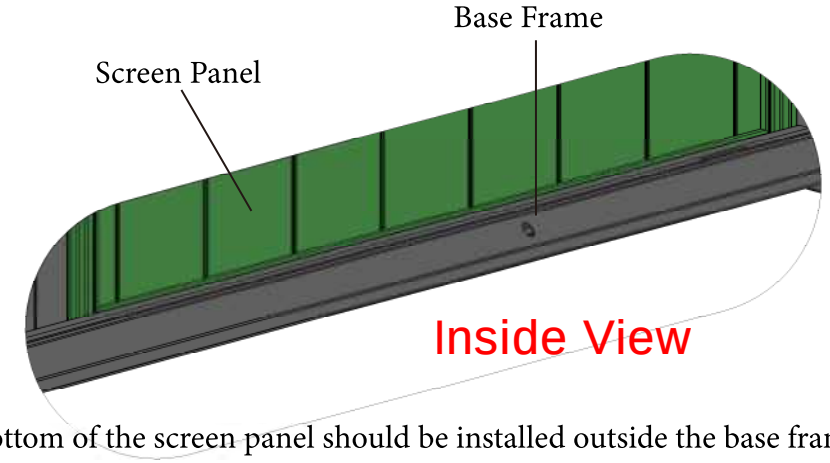

Inside View

The bottom of the screen panel should be installed outside the base frame.

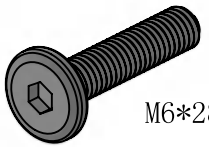

5# 2X

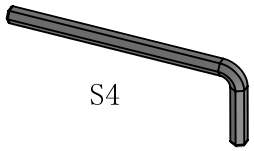

16# 1X

Insert the wall panel (#P1) into the track (O1), then correspond and position the screws (#5) with the square nuts (#24) inside the track.

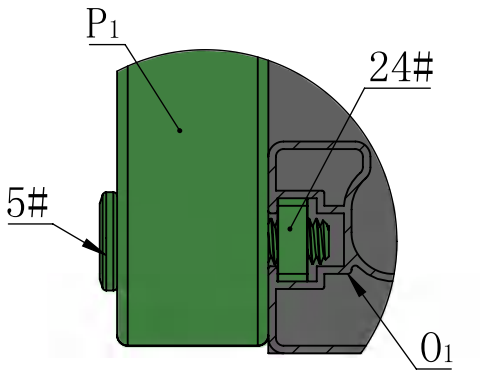

Section View

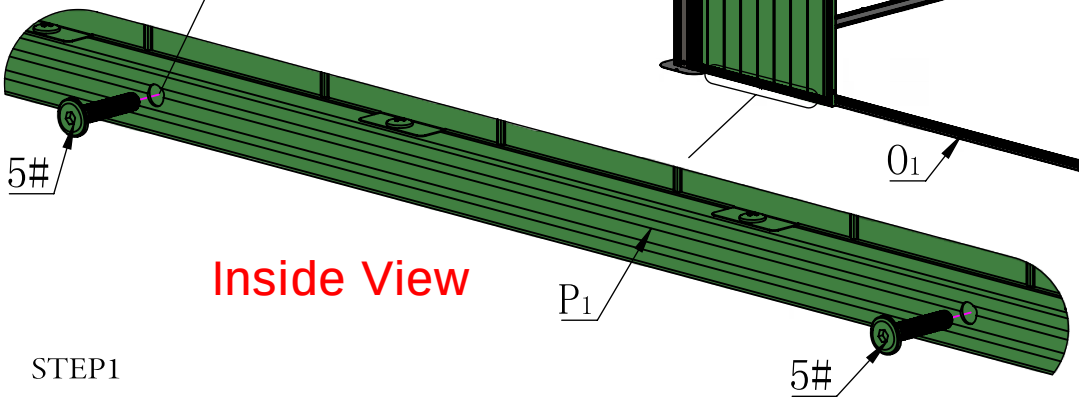

Inside View

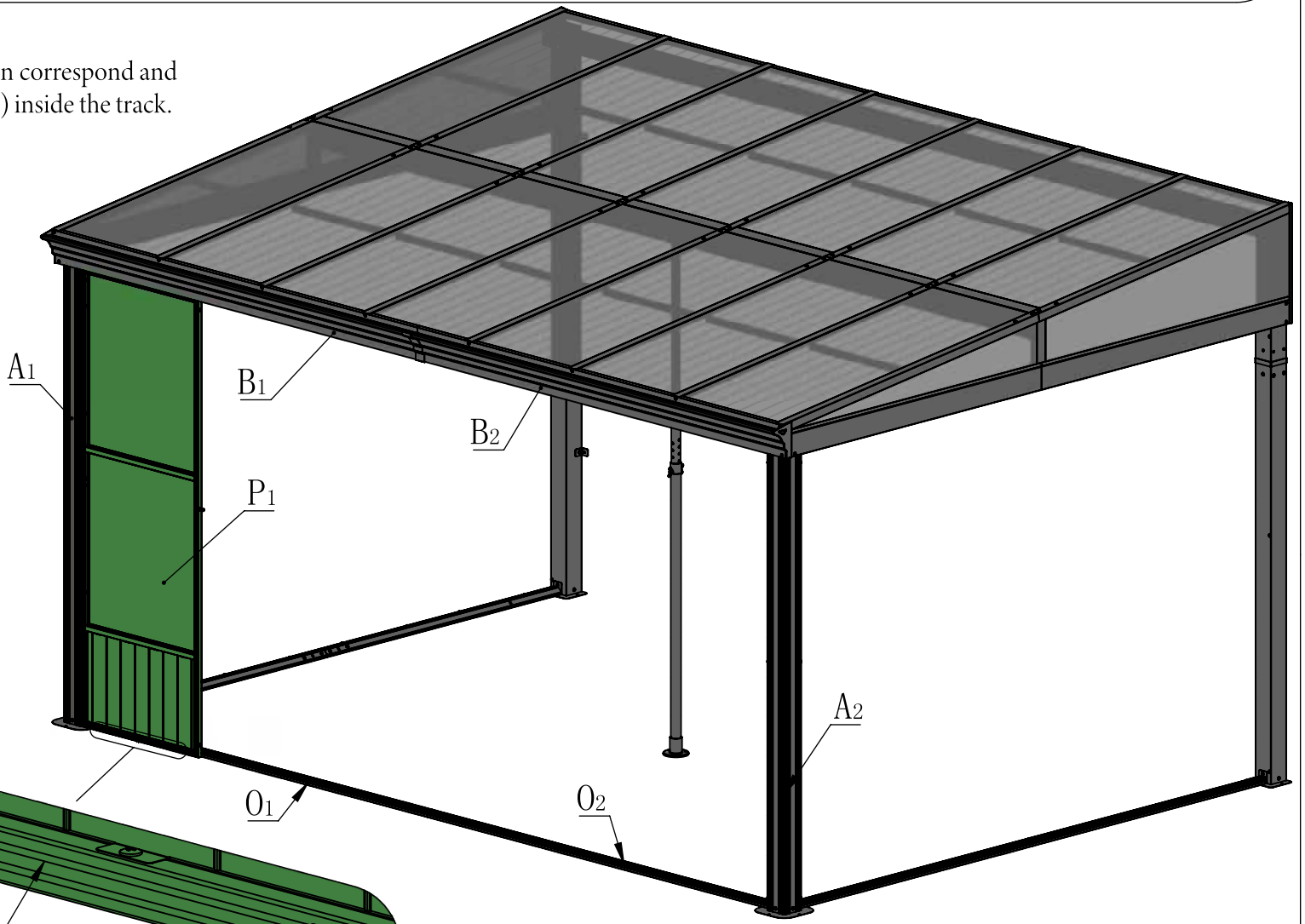

Note: Assemble according to the sequence of steps. Tighten each screen after all screws are positioned. (Align the holes, tighten screw #5 to metal square nuts #24 first)

STEP1

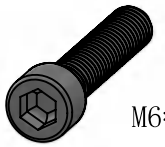

M6*30

19# 3X



20# 3X

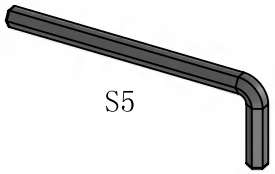

S5

25# 1X

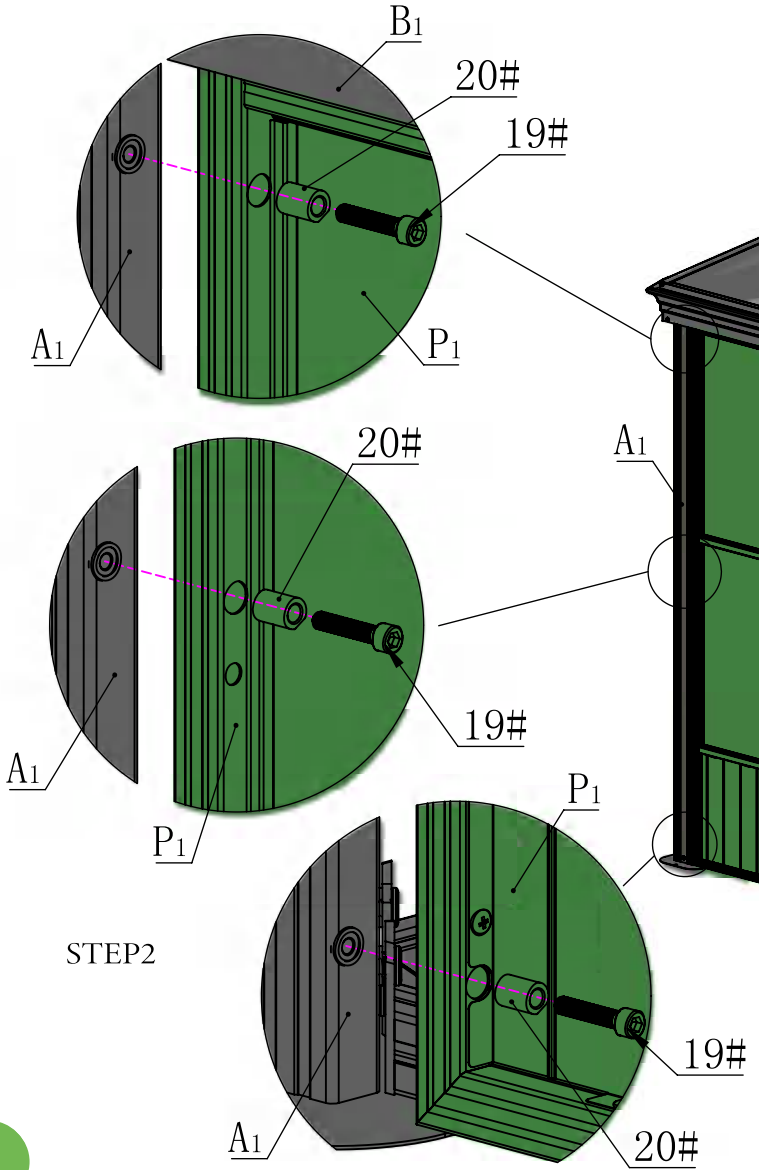

STEP2

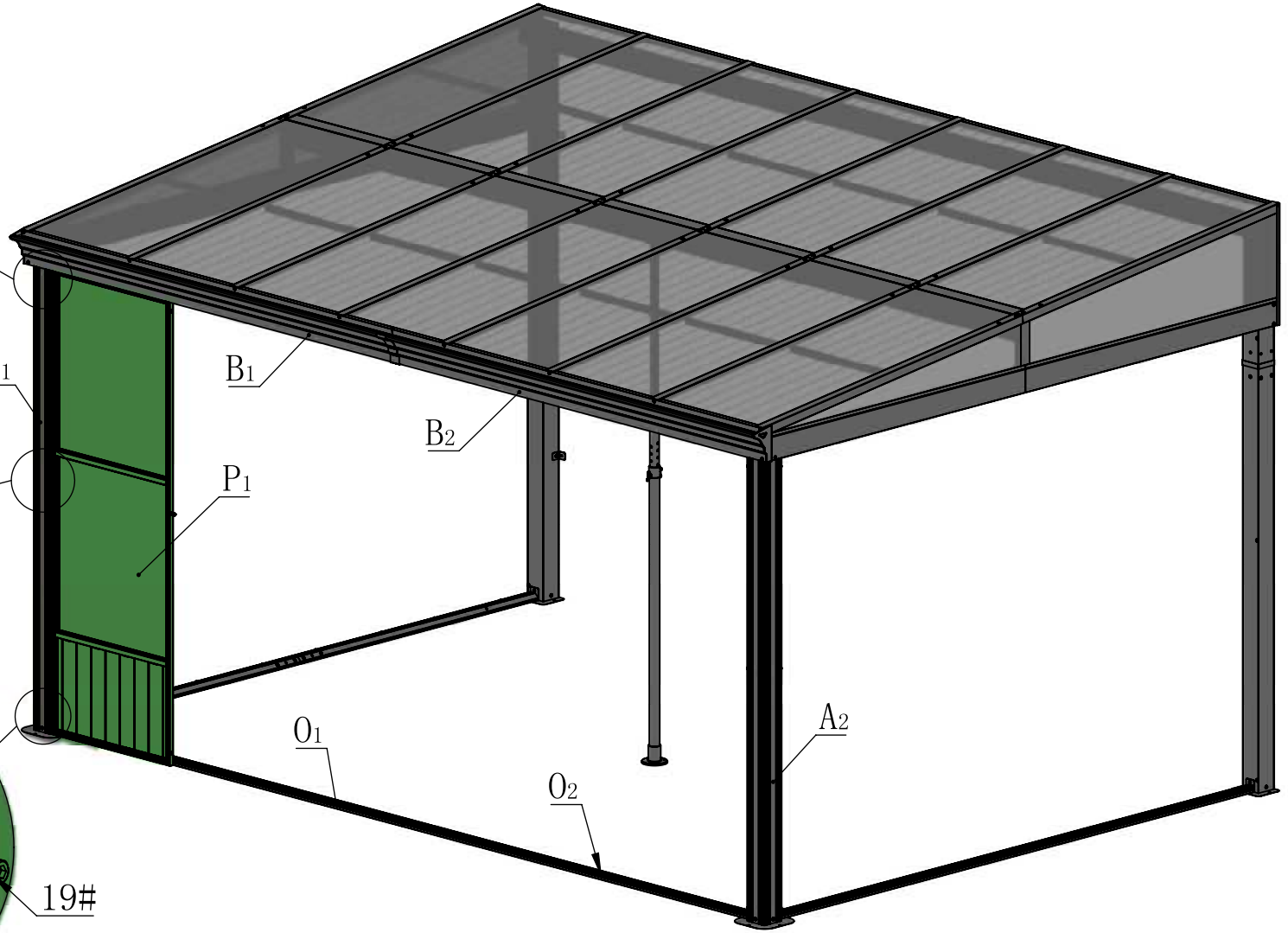

Note: Use parts #19 and #20 to secure the wall panel (#P1) to the post (#A1).

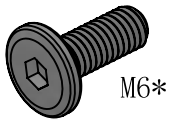

M6*16

4# 2X

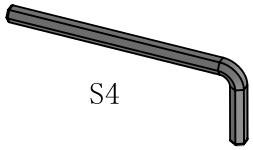

S4

16# 1X

STEP3

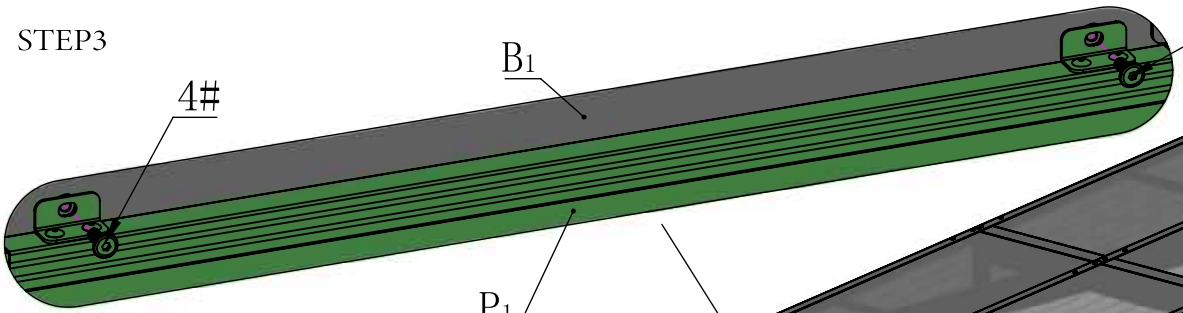

Inside View

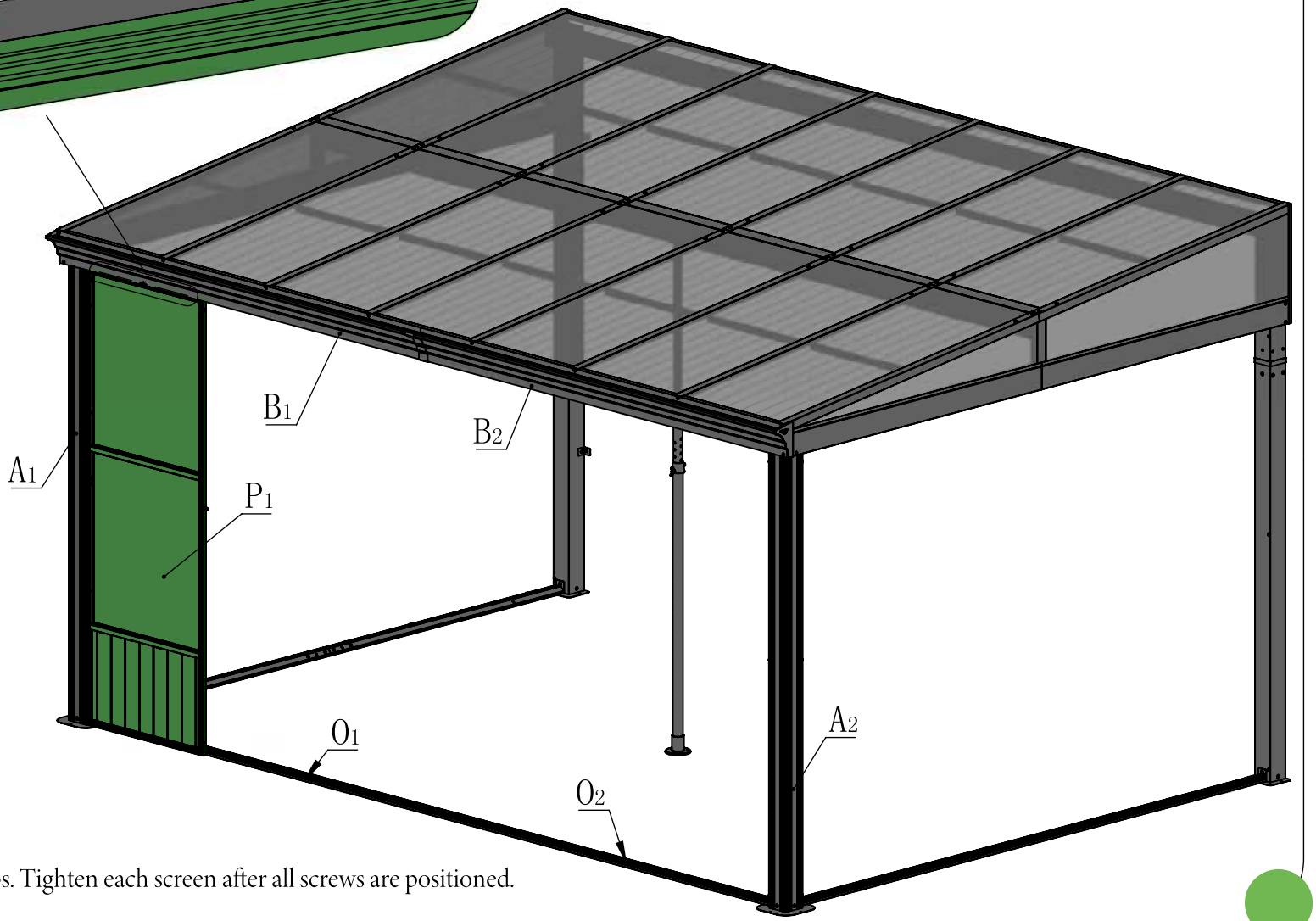

The removable windows should be installed outwards while the screen is inwards.

Note: Assemble according to the sequence of steps. Tighten each screen after all screws are positioned.

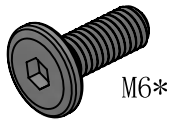

4# 2X

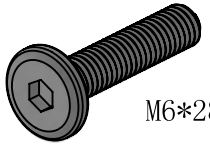

5# 2X

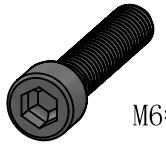

19# 3X

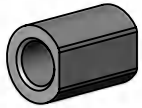

20#

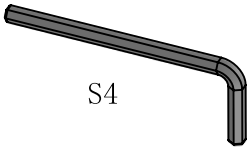

16# 1X

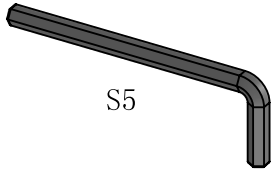

25# 1X

STEP3

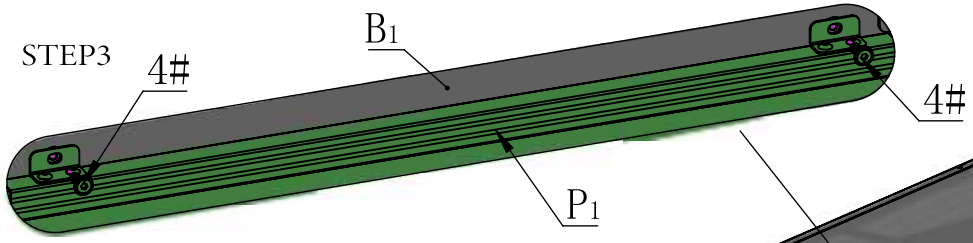

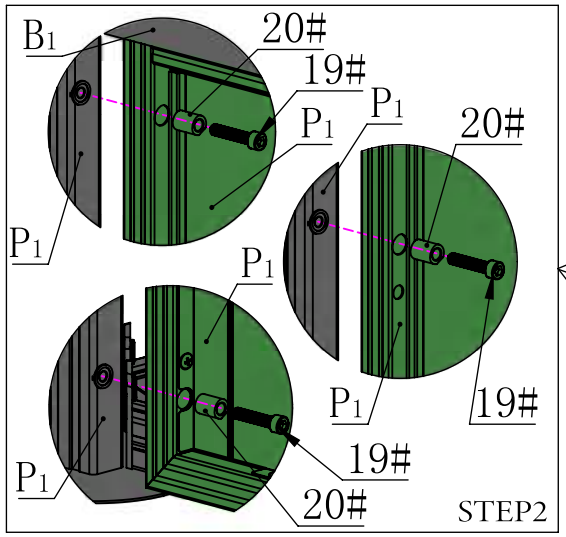

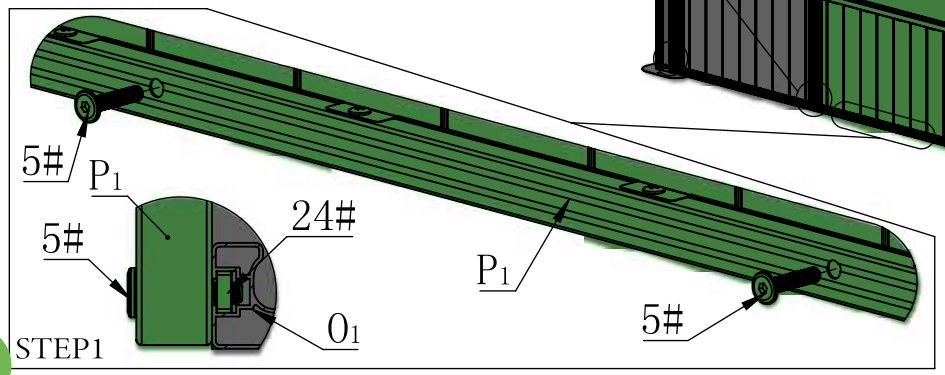

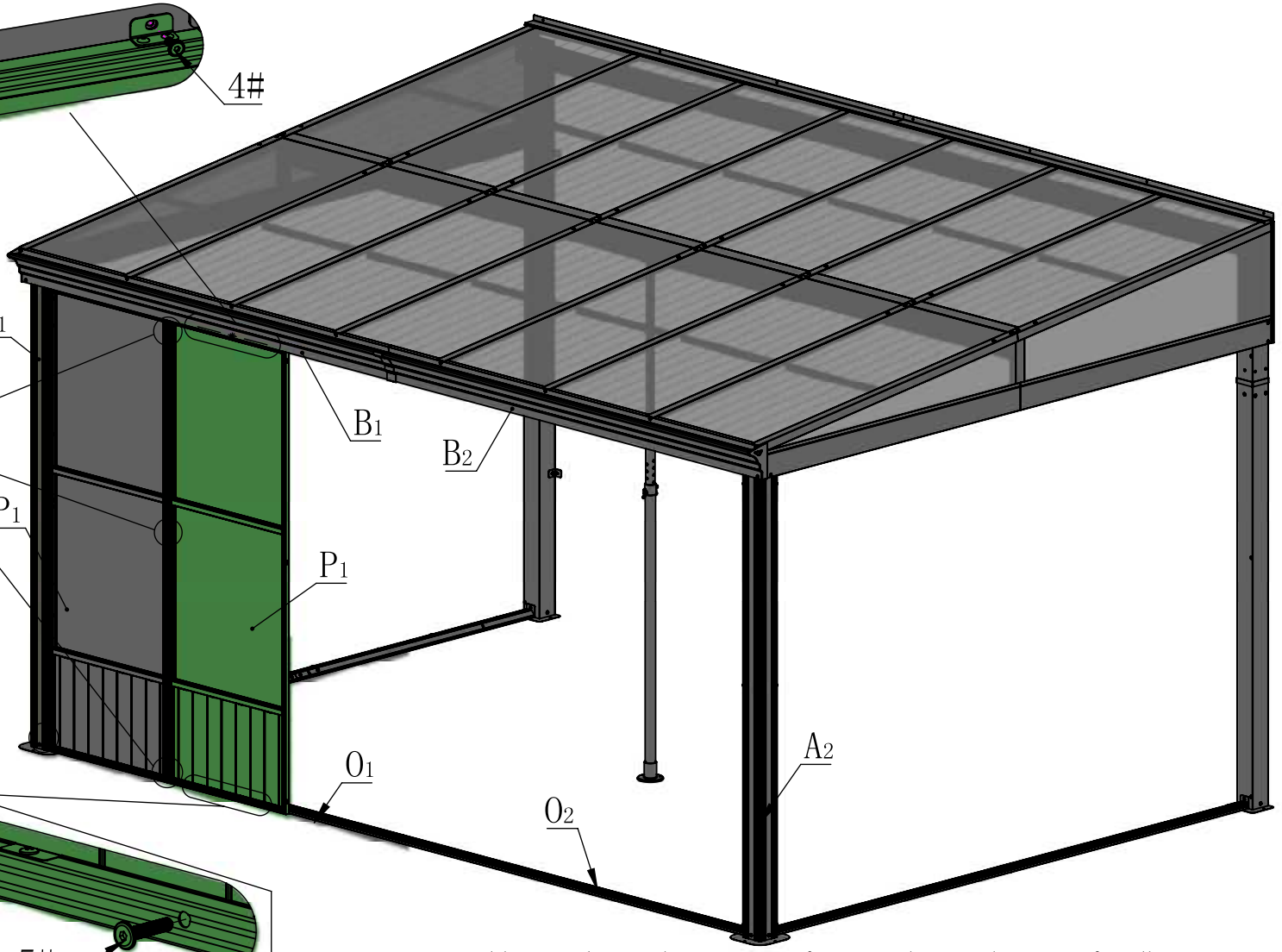

Note: Assemble according to the sequence of steps. Tighten each screen after all screws are positioned. (Align the holes, tighten screw 5# to metal square nuts 24# first)

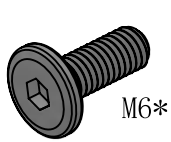

4# 4X

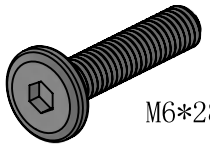

5# 4X

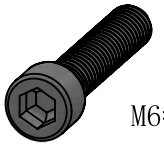

19# 6X

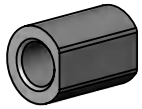

20# 6X

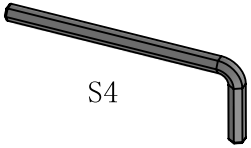

16# 1X

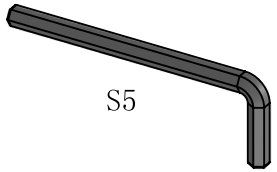

25# 1X

STEP3

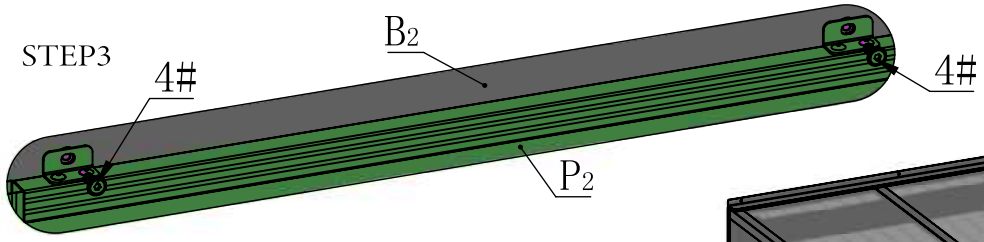

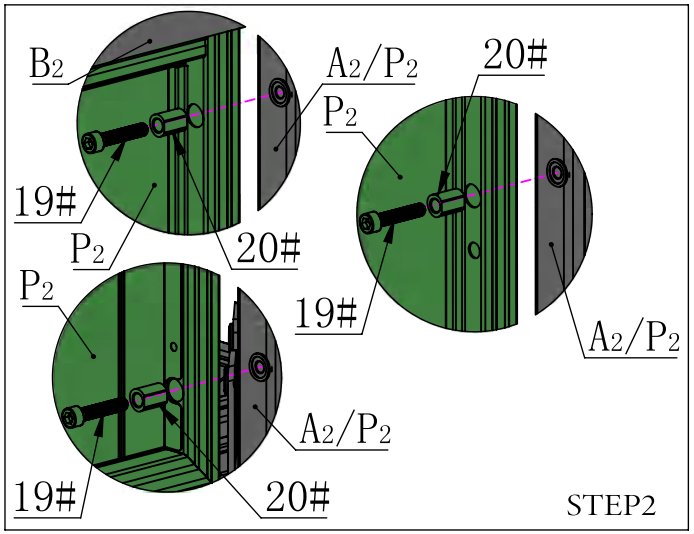

STEP2

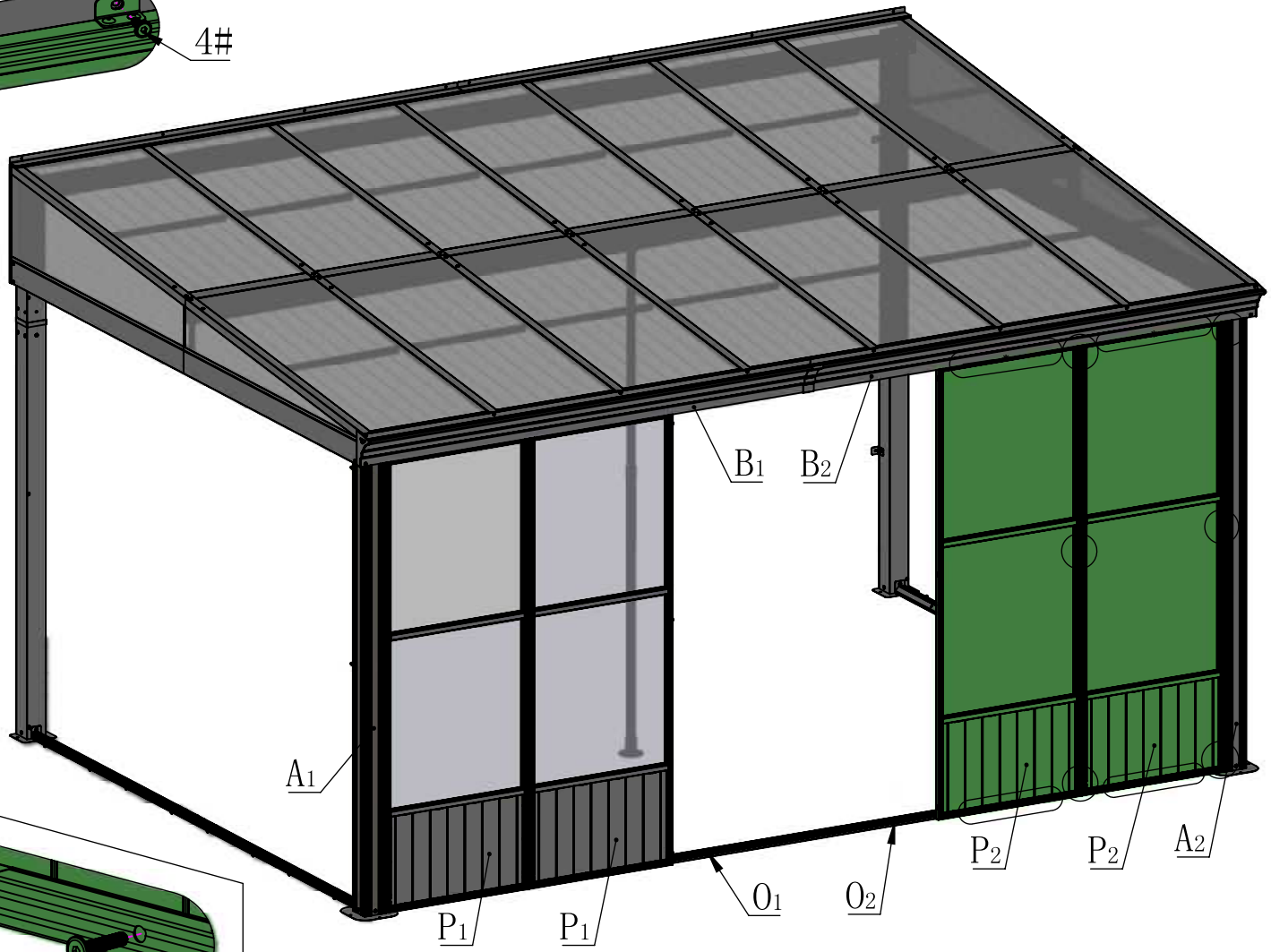

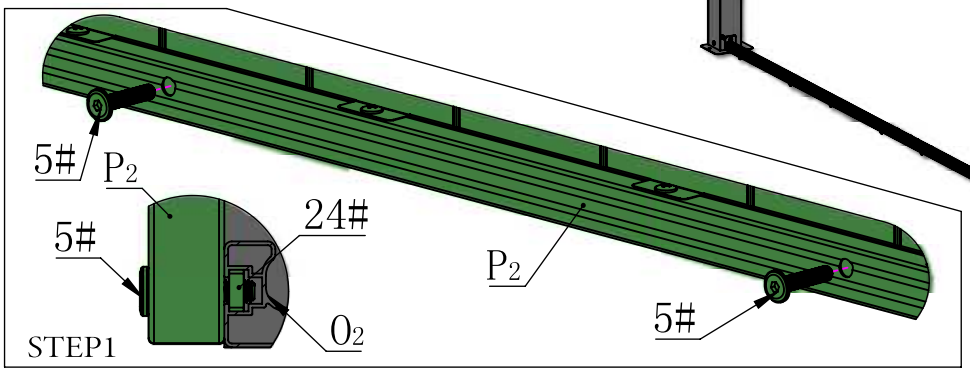

STEP1

Note: Assemble according to the sequence of steps. Tighten each screen after all screws are positioned. (Align the holes, tighten screw 5# to metal square nuts 24# first)

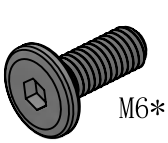

4# 2X

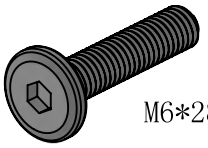

5# 2X

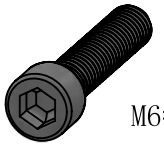

19# 3X

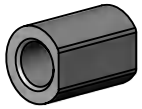

20# 3X

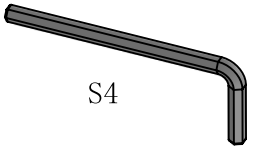

16# 1X

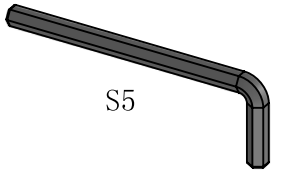

25# 1X

STEP3

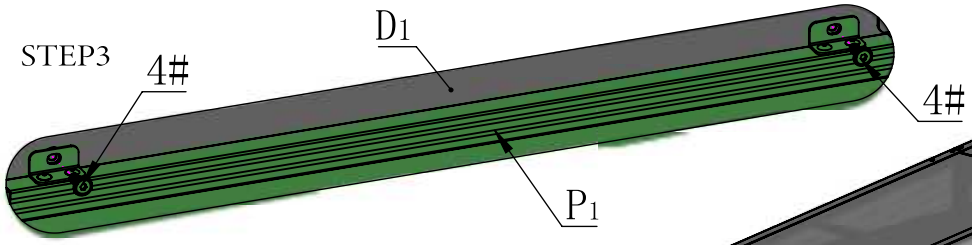

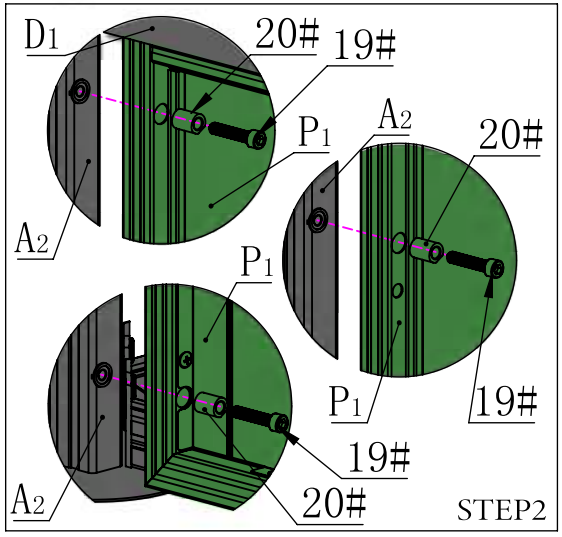

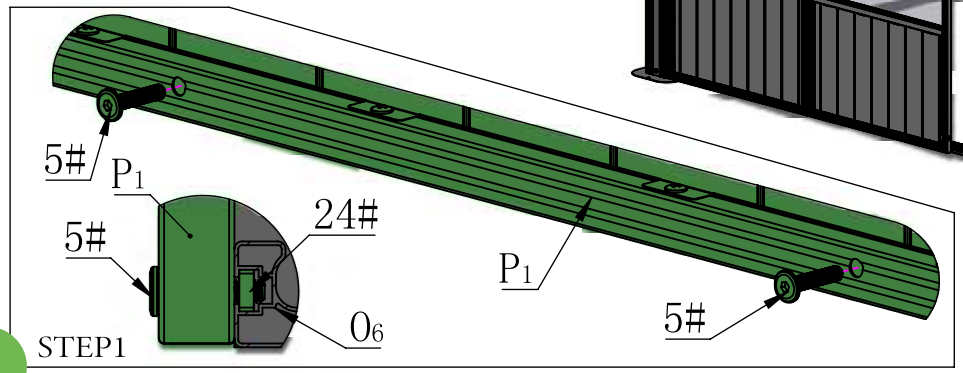

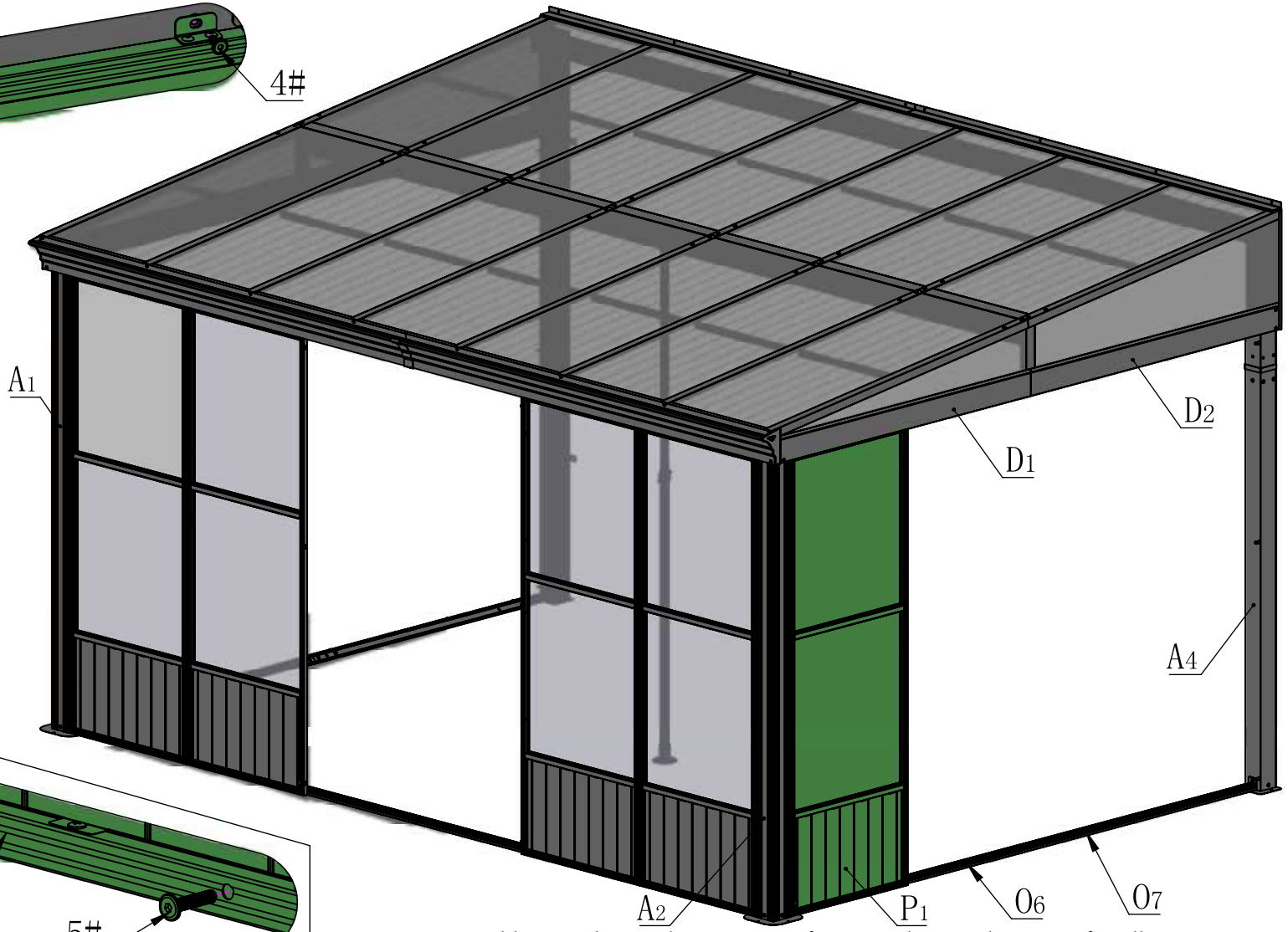

Note: Assemble according to the sequence of steps. Tighten each screen after all screws are positioned. (Align the holes, tighten screw 5# to metal square nuts 24# first)

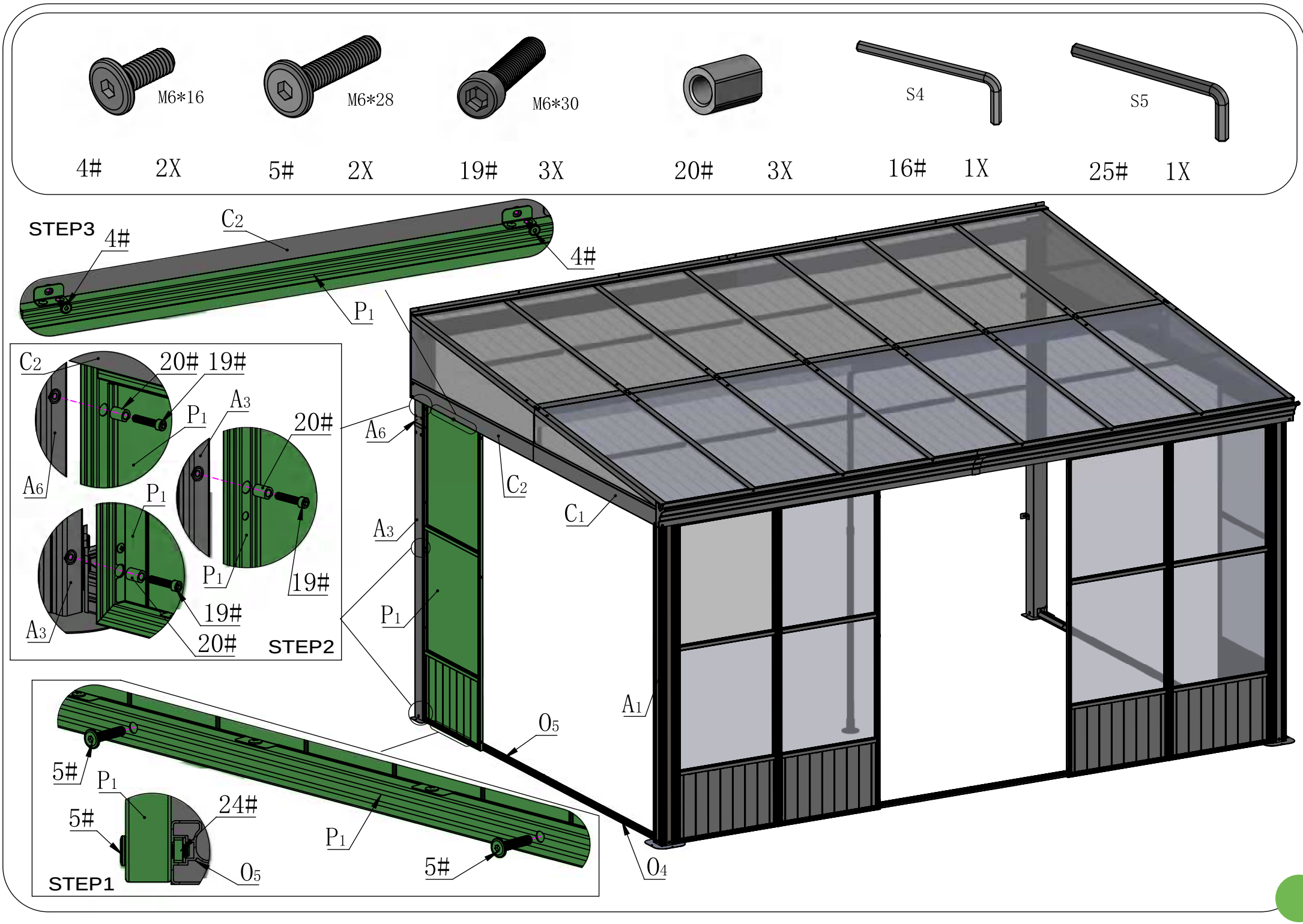
M6*16
M6*28
M6*30
S4
S5
4# 2X
5# 2X
19# 3X
20# 3X
16# 1X
25# 1X
STEP3
4#
C2
4#
P1
C2
20# 19#
P1
A3
20#
A6
P1
19#
A3
19#
20#
STEP2
A6
C2
C1
A3
P1
A1
O5
5#
P1
24#
5#
O5
P1
5#
O4
STEP1

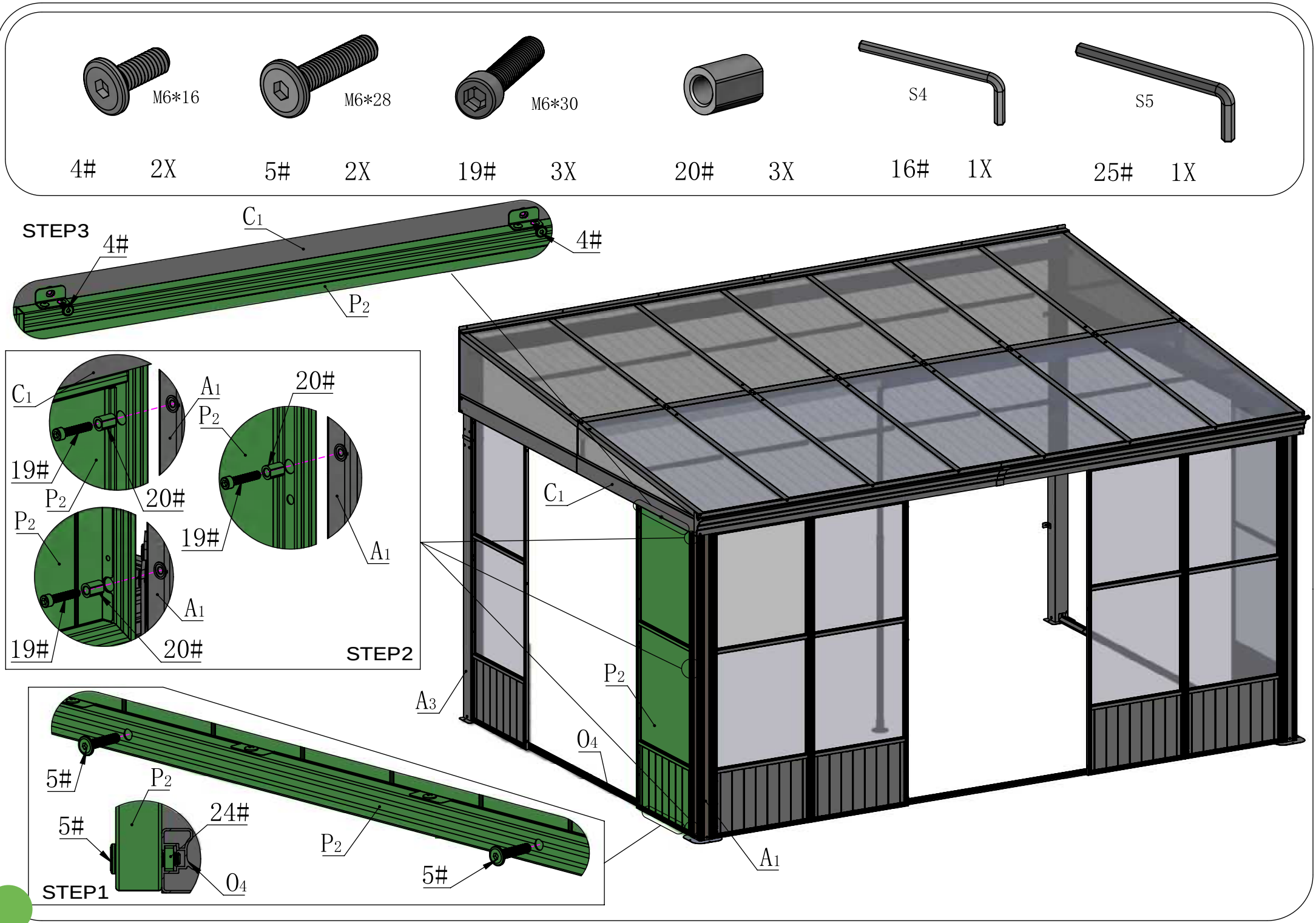
M6*16
M6*28
M6*30
S4
S5
4# 2X
5# 2X
19# 3X
20# 3X
16# 1X
25# 1X
STEP3
C1
4#
4#
P2
C1
A1
P2
20#
19#
P2
20#
P2
19#
A1
A1
19#
20#
STEP2
C1
P2
A3
O4
A1
5#
P2
5#
24#
P2
5#
O4
STEP1

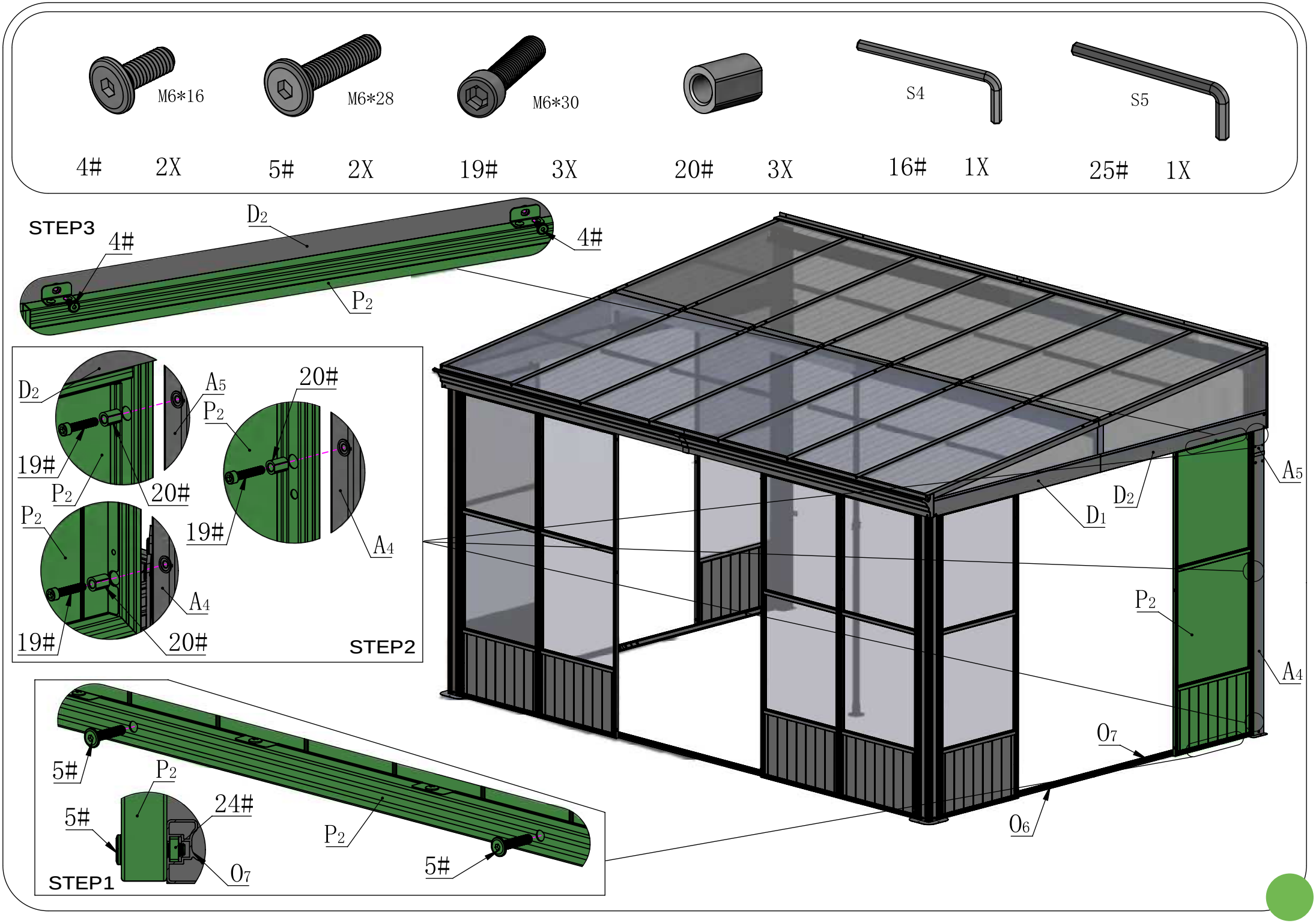
M6*16
M6*28
M6*30
S4
S5
4# 2X
5# 2X
19# 3X
20# 3X
16# 1X
25# 1X
STEP3
4#
D2
4#
P2
D2
A5
P2
19#
P2
20#
20#
19#
A4
P2
A4
19#
20#
STEP2
5#
P2
5#
24#
P2
5#
O7
STEP1
A5
D1
D2
P2
A4
O7
O6

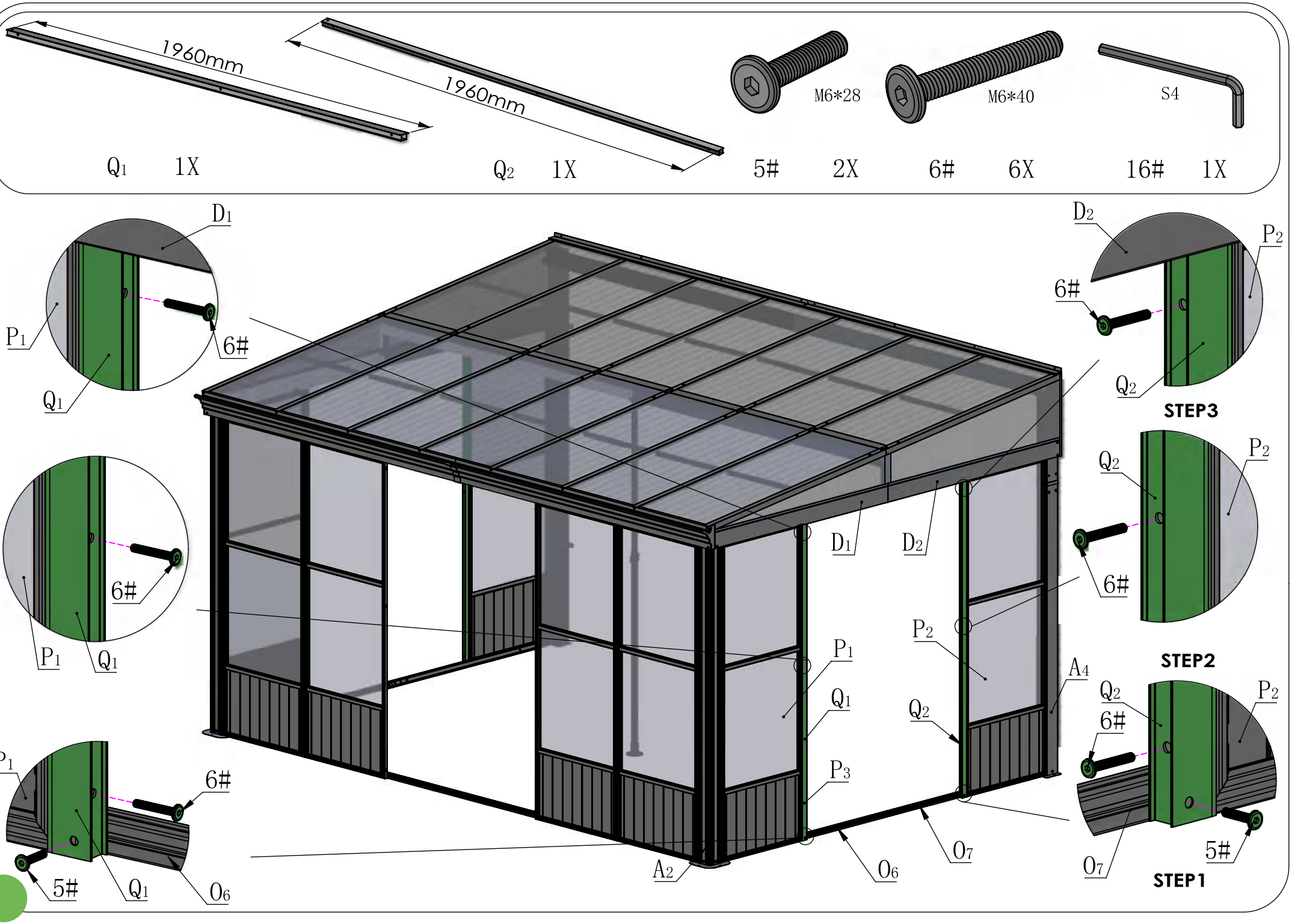
1960mm
1960mm
M6*28
M6*40
S4
Q1 1X
Q2 1X
5# 2X
6# 6X
16# 1X
D1
P1
6#
Q1
D2
P2
6#
Q2
STEP3
Q2
P2
6#
STEP2
P1
Q1
6#
P1
Q1
P2
Q2
A4
P1
Q1
P3
A2
O6
O7
Q2
6#
P2
5#
O7
STEP1
P1
6#
5#
Q1
O6

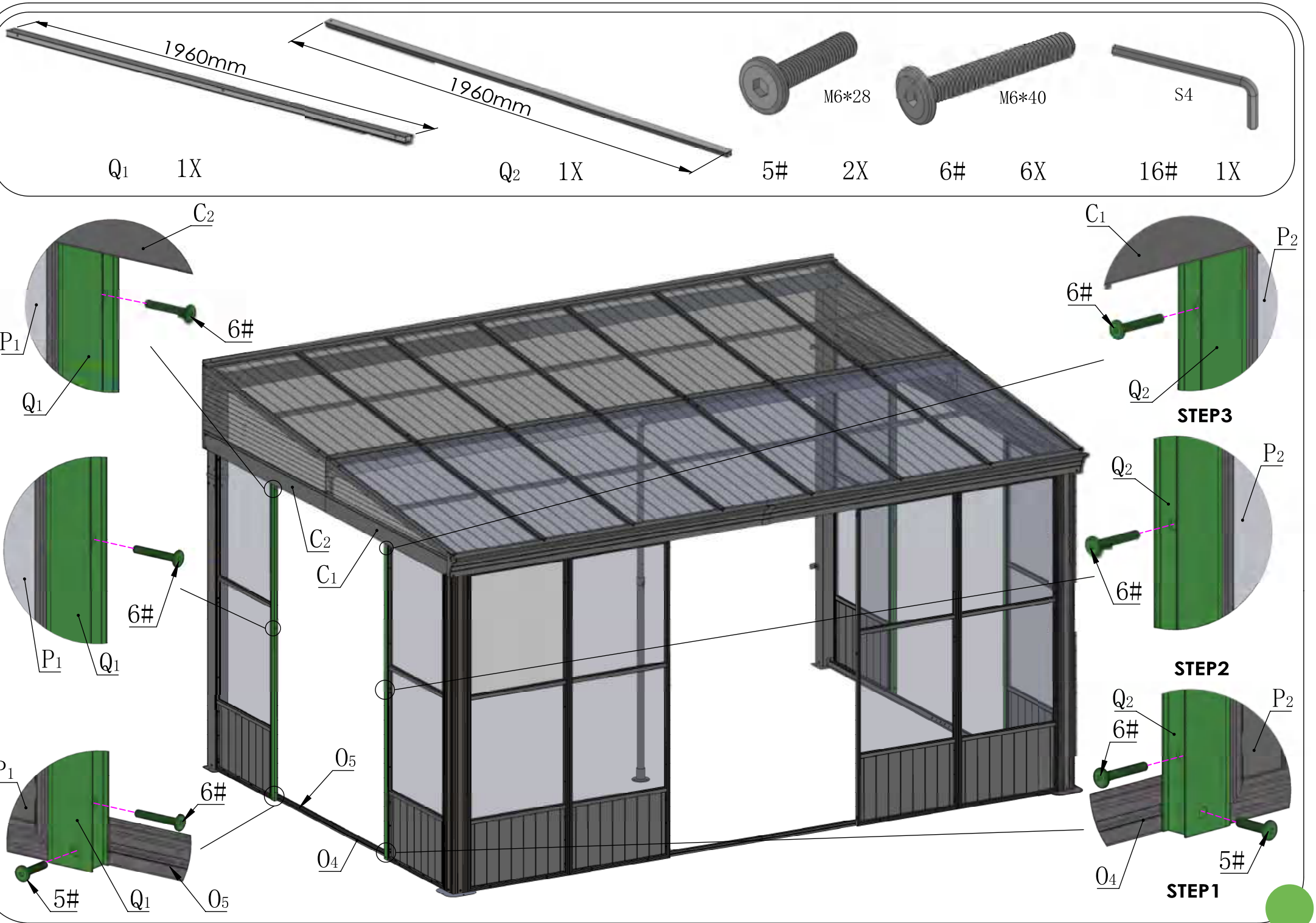
1960mm
1960mm
M6*28
M6*40
S4
Q1 1X
Q2 1X
5# 2X
6# 6X
16# 1X
C2
P1
6#
Q1
C1
P2
Q2
STEP3
STEP2
STEP1
O5
O4
5#

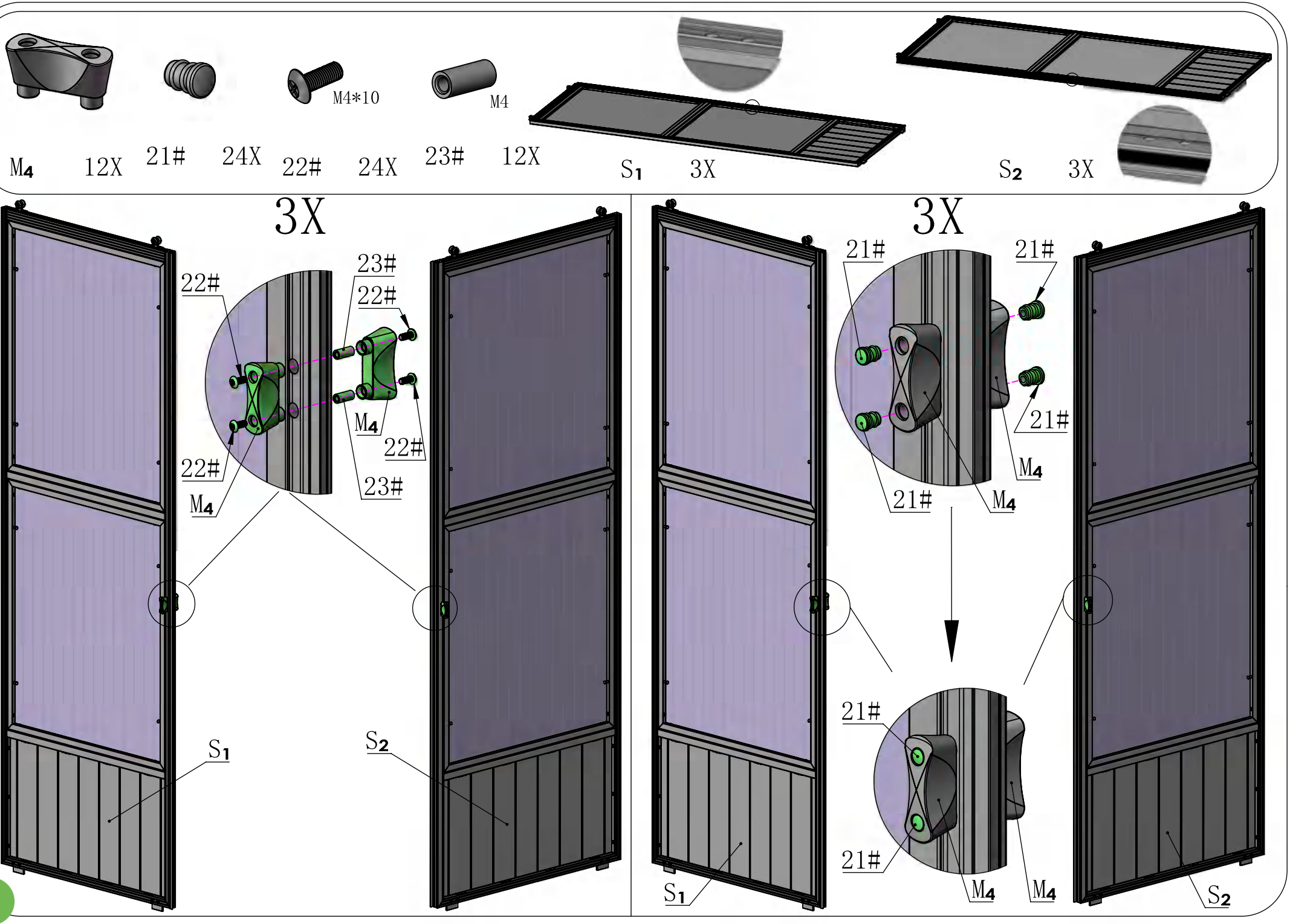
M4*10
M4
M4 12X
21# 24X
22# 24X
23# 12X
S1 3X
S2 3X
3X
22#
23#
22#
M4
22#
22#
M4
23#
S1
S2
3X
21#
21#
21#
M4
21#
M4
21#
21#
M4
M4
S1
S2

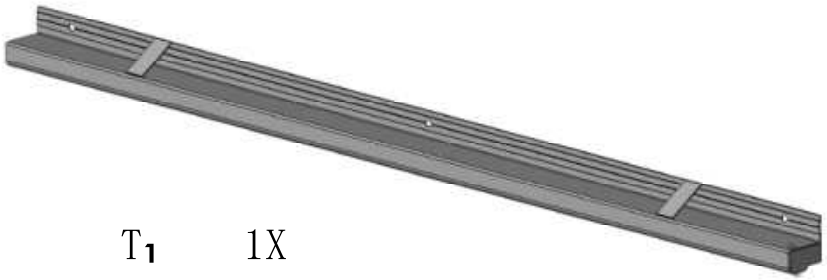

T_1 1X

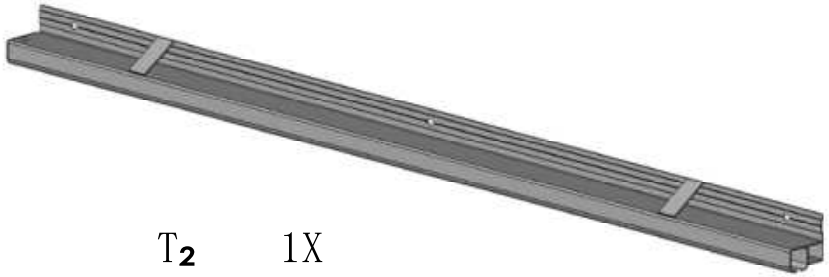

T_2 1X

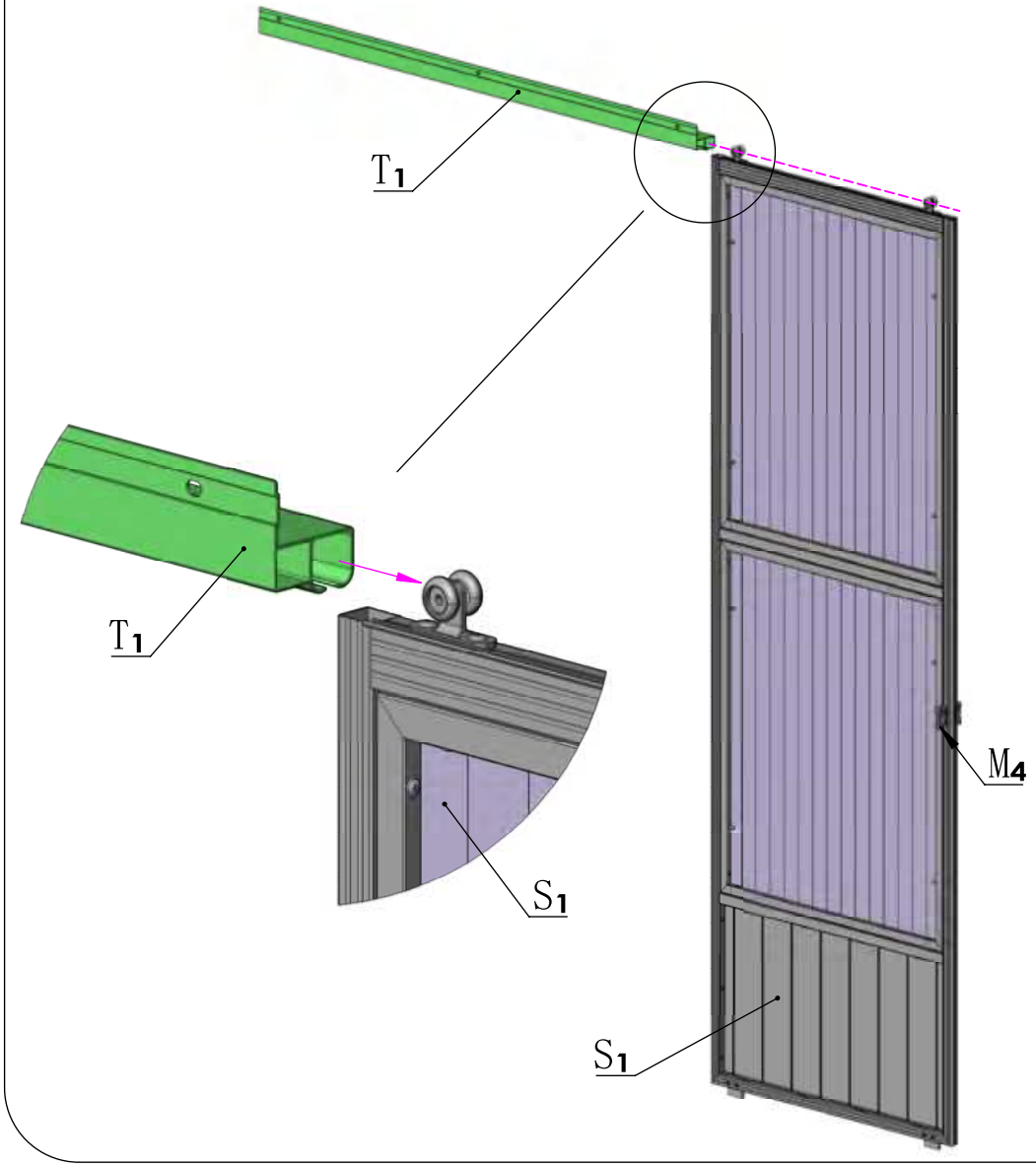

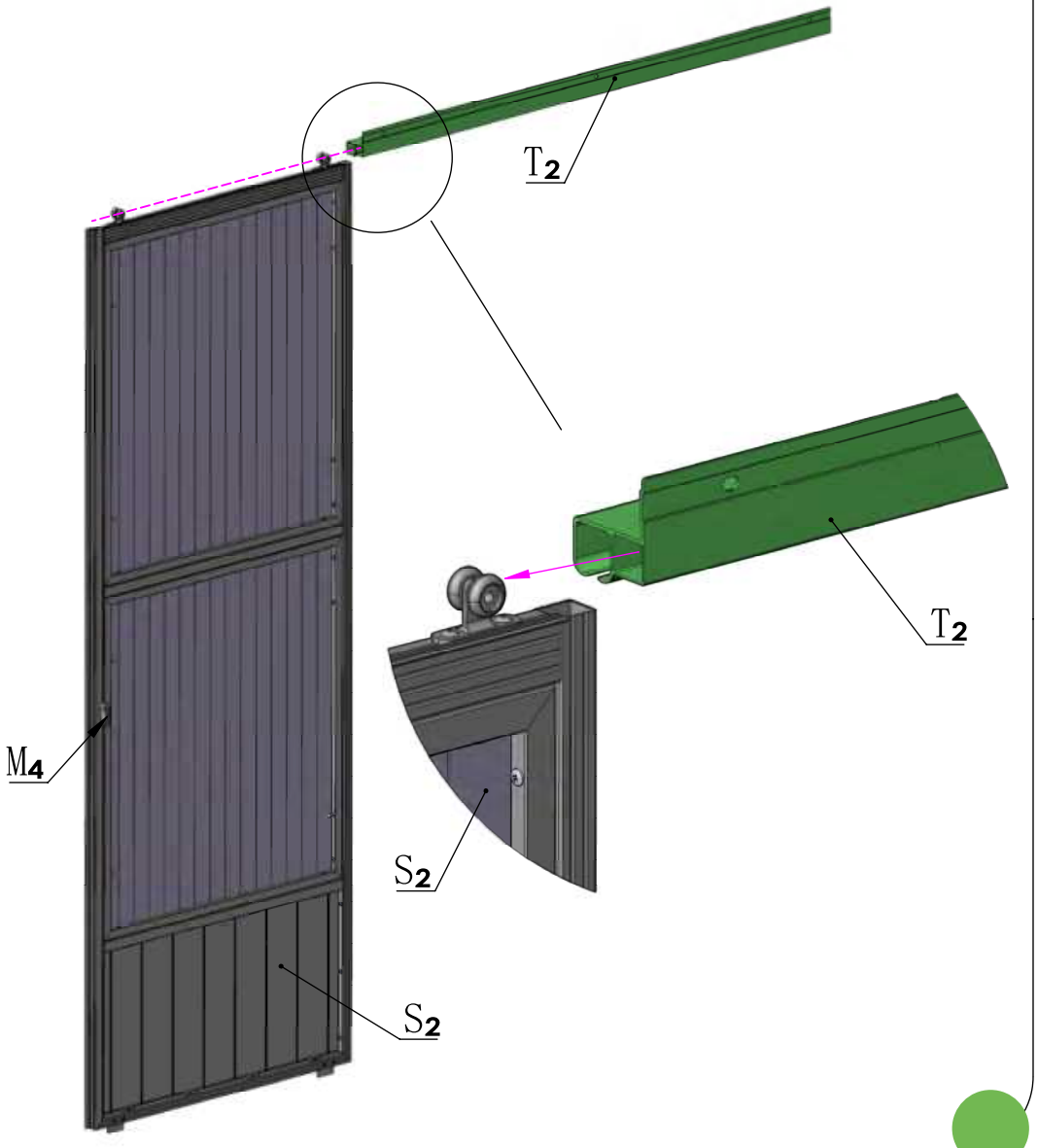



M6*16

4# 3X



S4

16# 1X

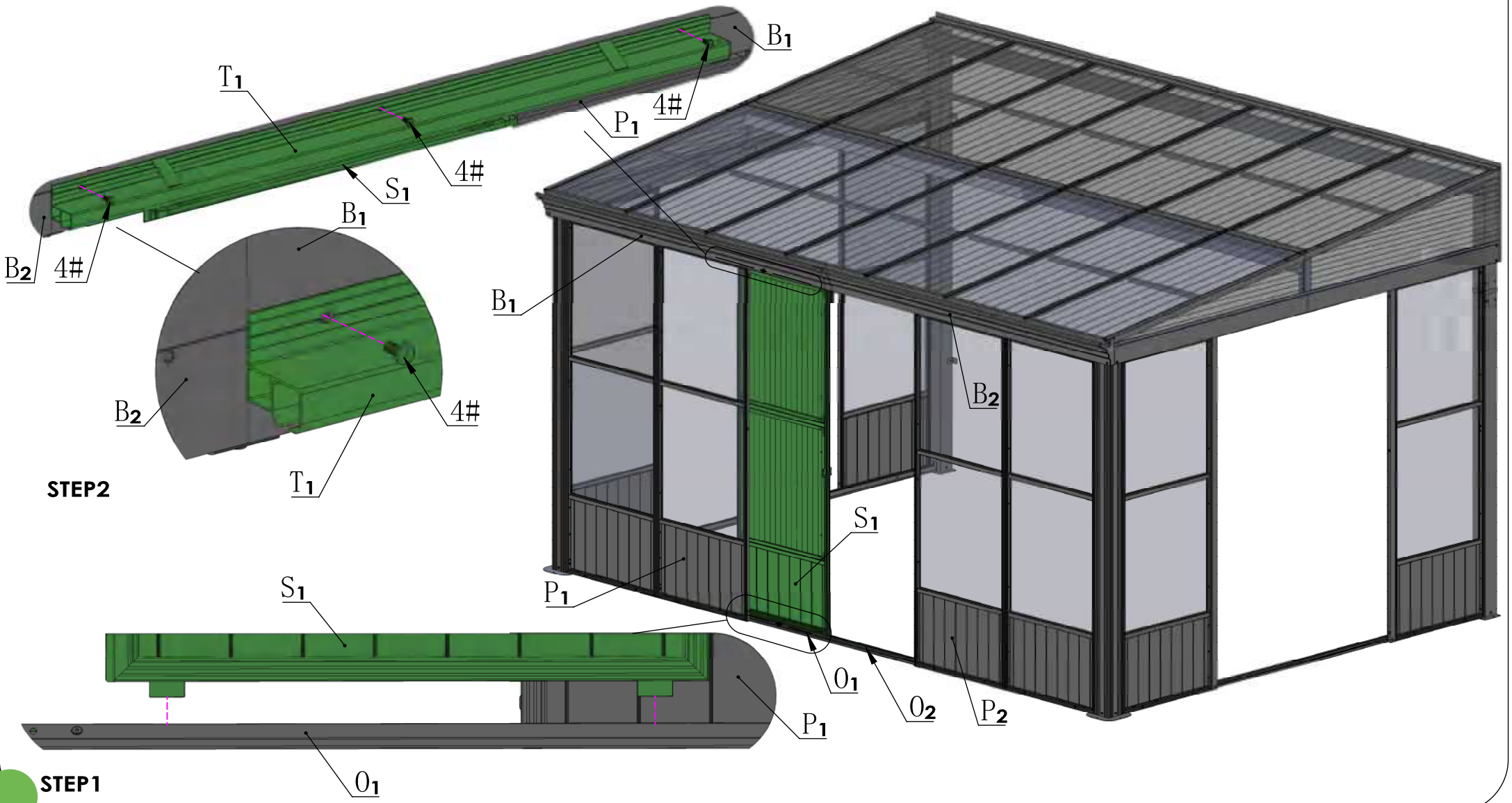



M6*16

4# 3X



S4

16# 1X

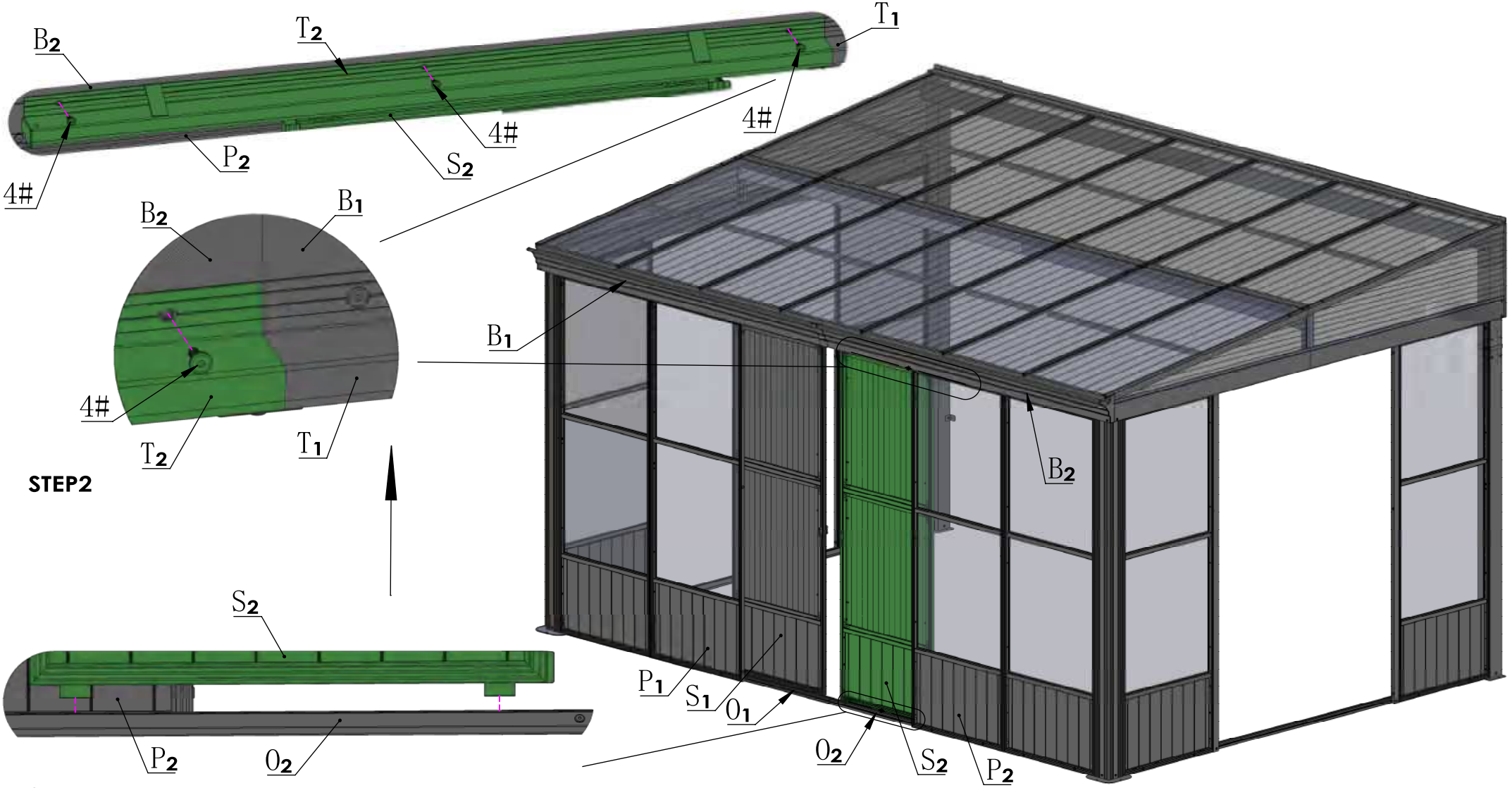

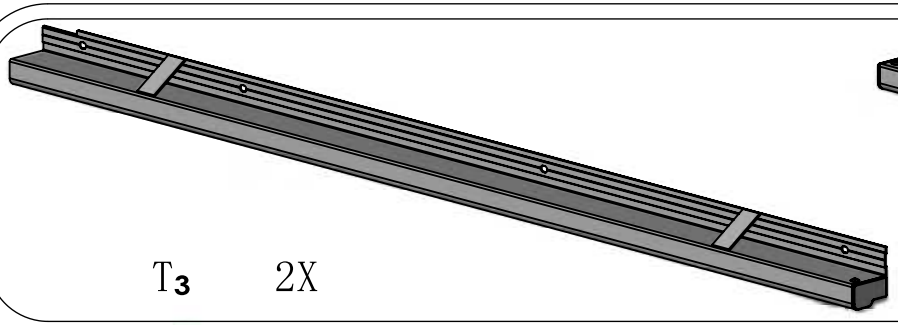

T3 2X

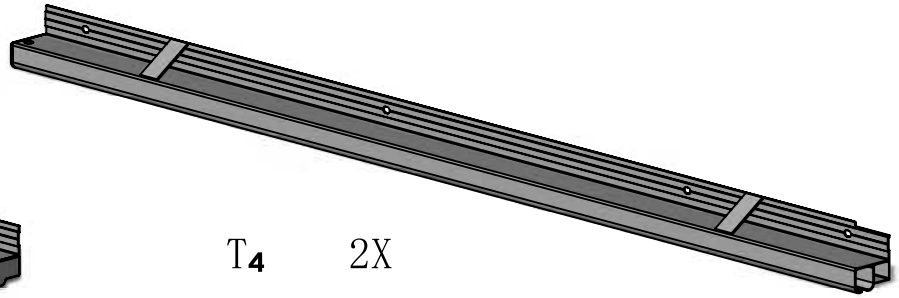

T4 2X

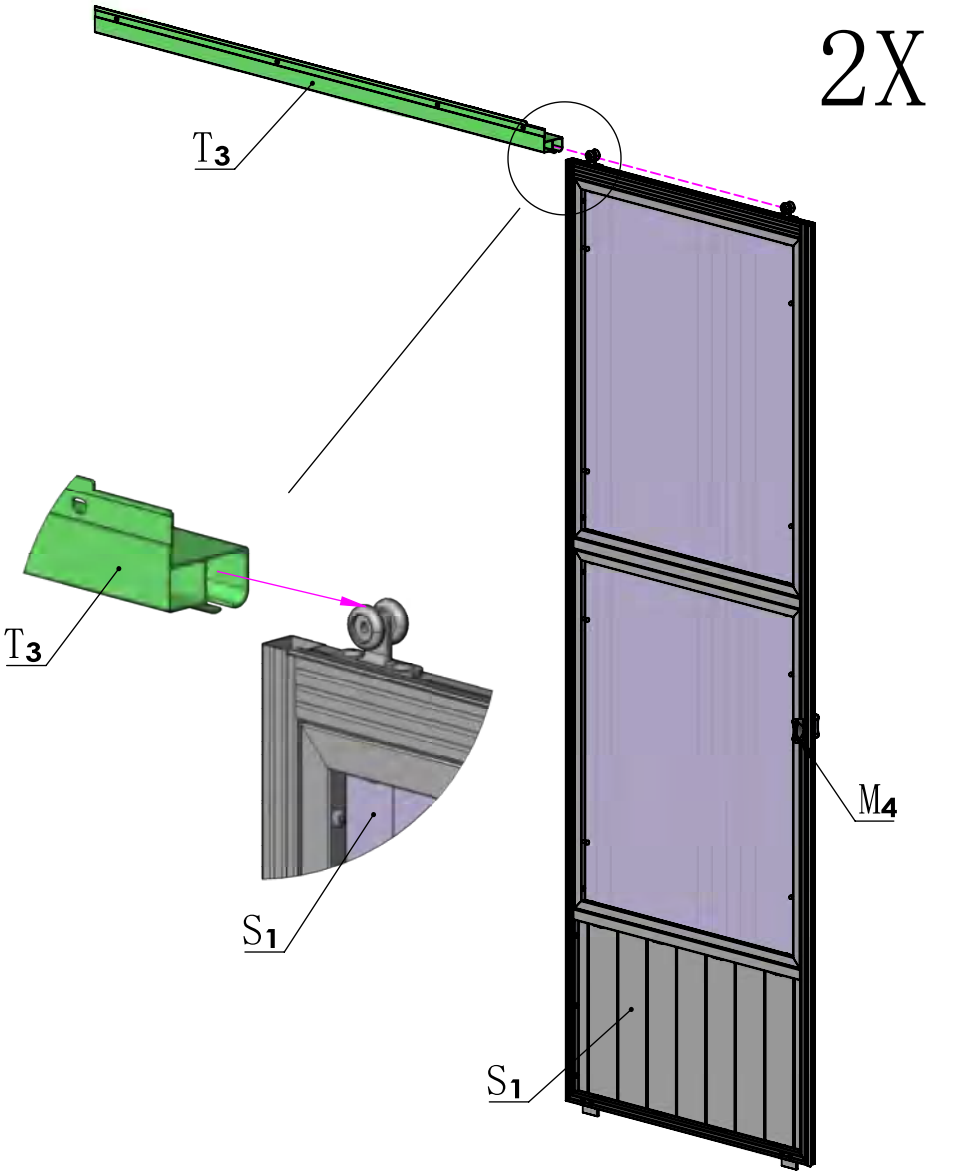

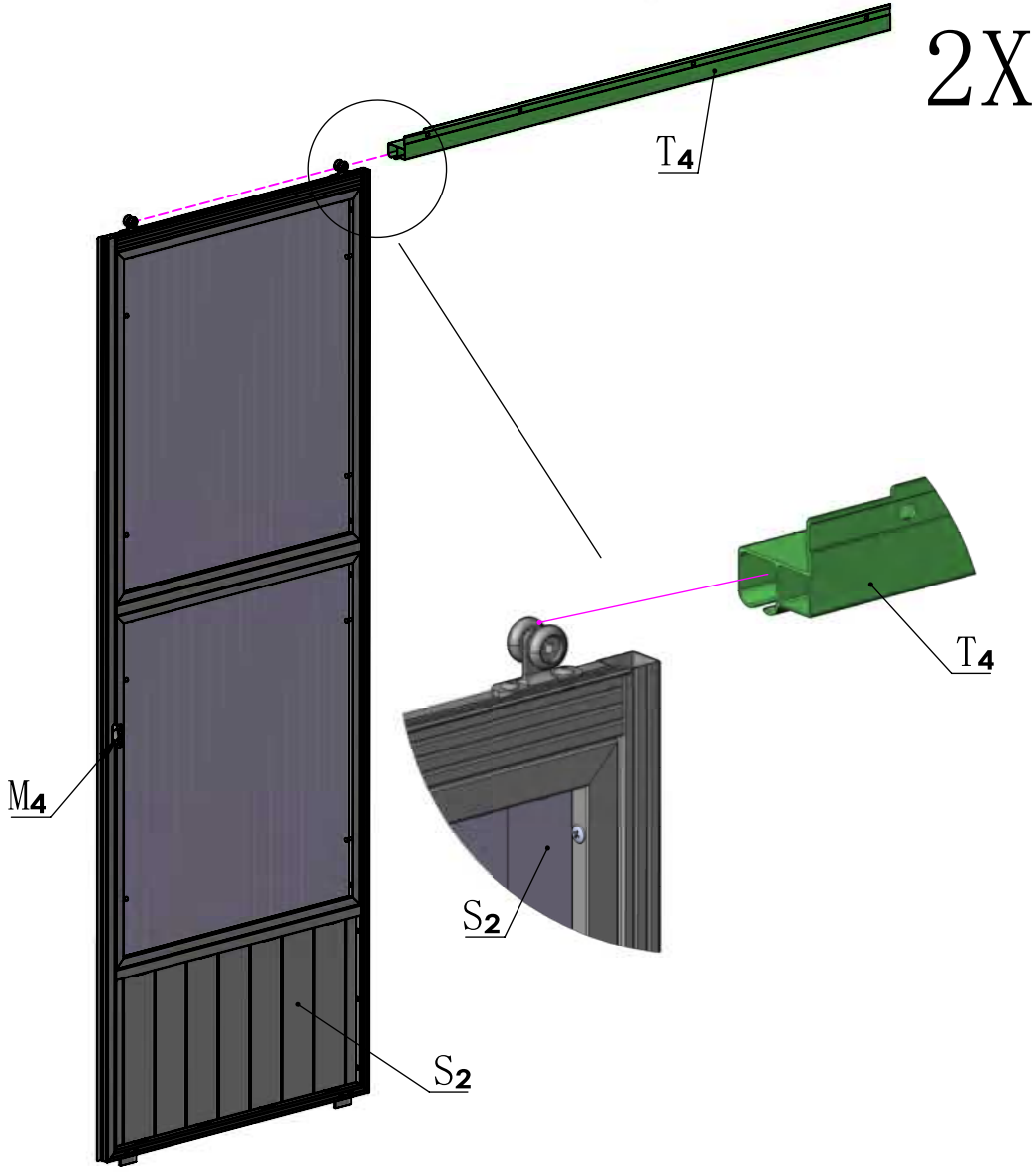



M6*16

4# 4X



S4

16# 1X

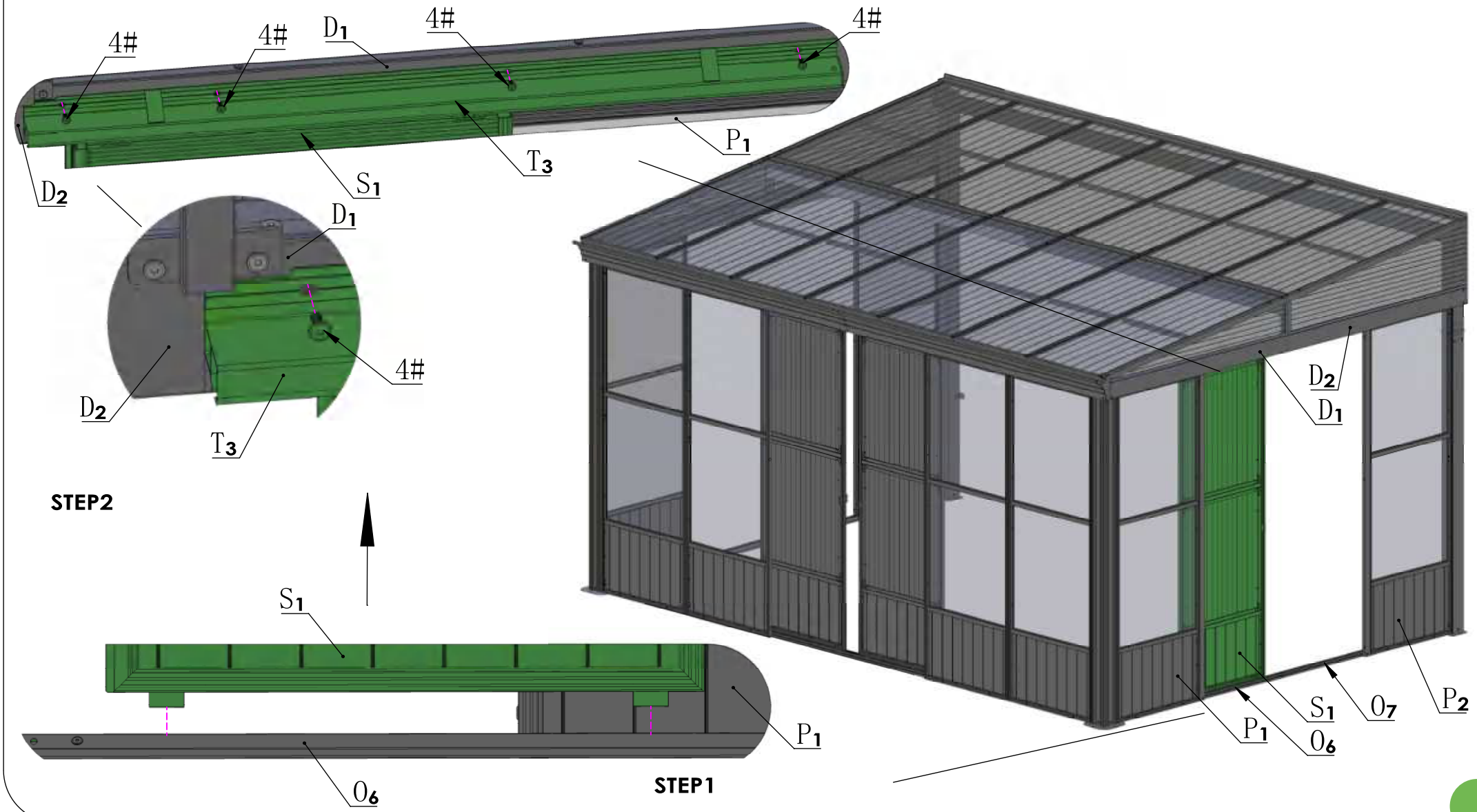

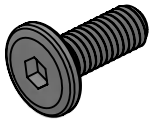

M6*16

4# 4X

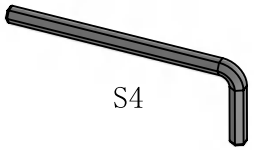

S4

16# 1X

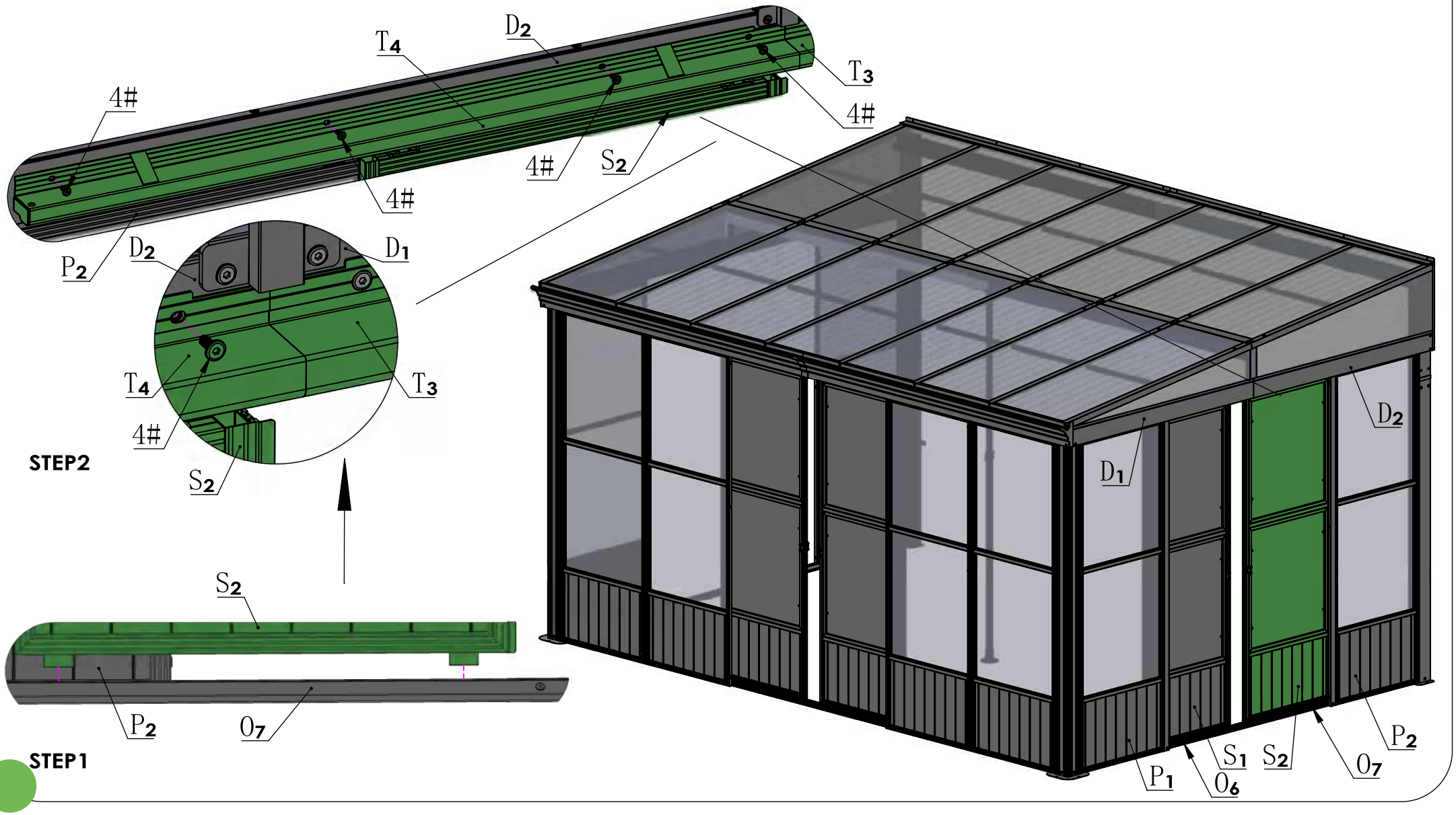



M6*16

4# 4X



S4

16# 1X

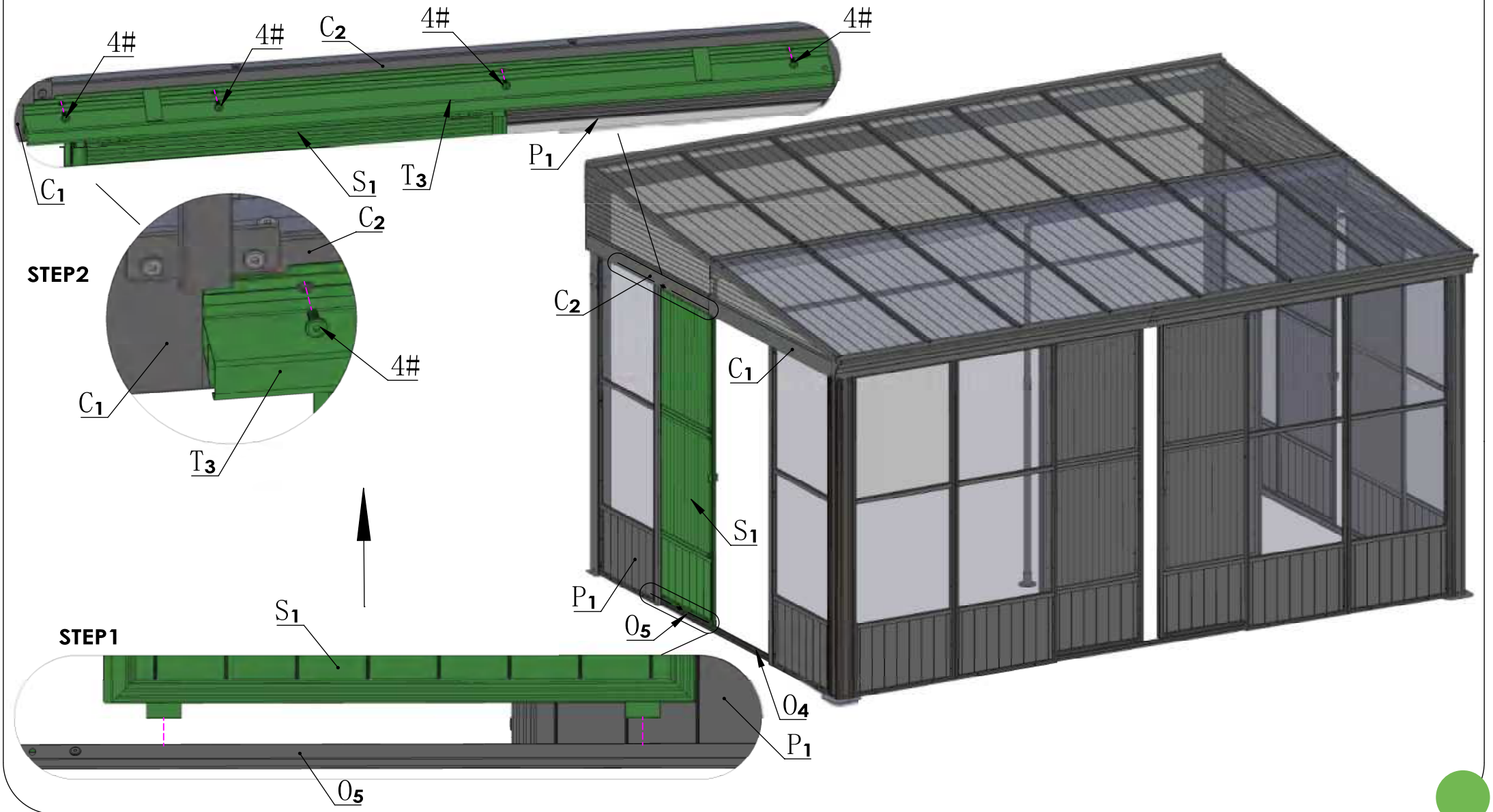



M6*16

4# 4X



S4

16# 1X

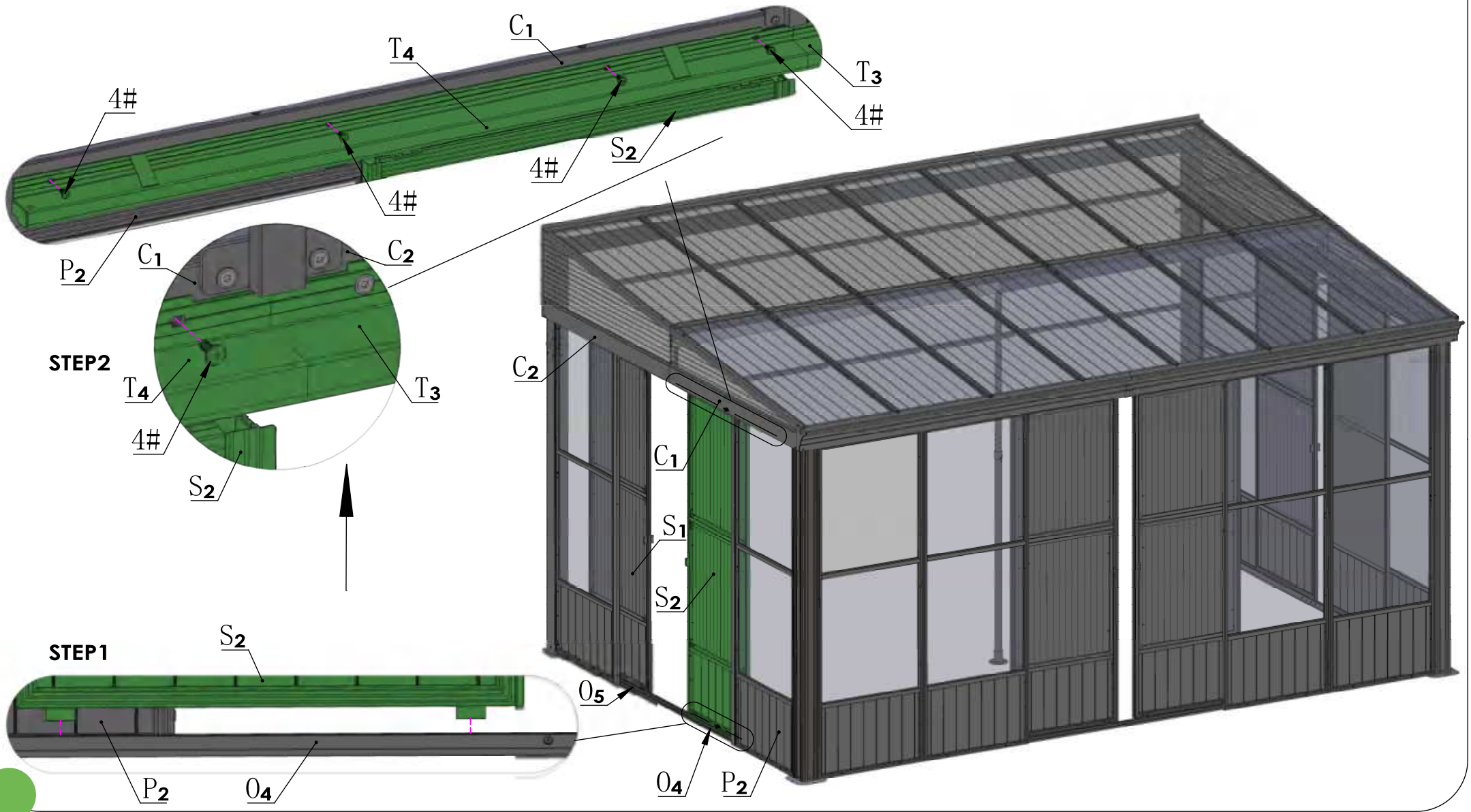



26#　6X

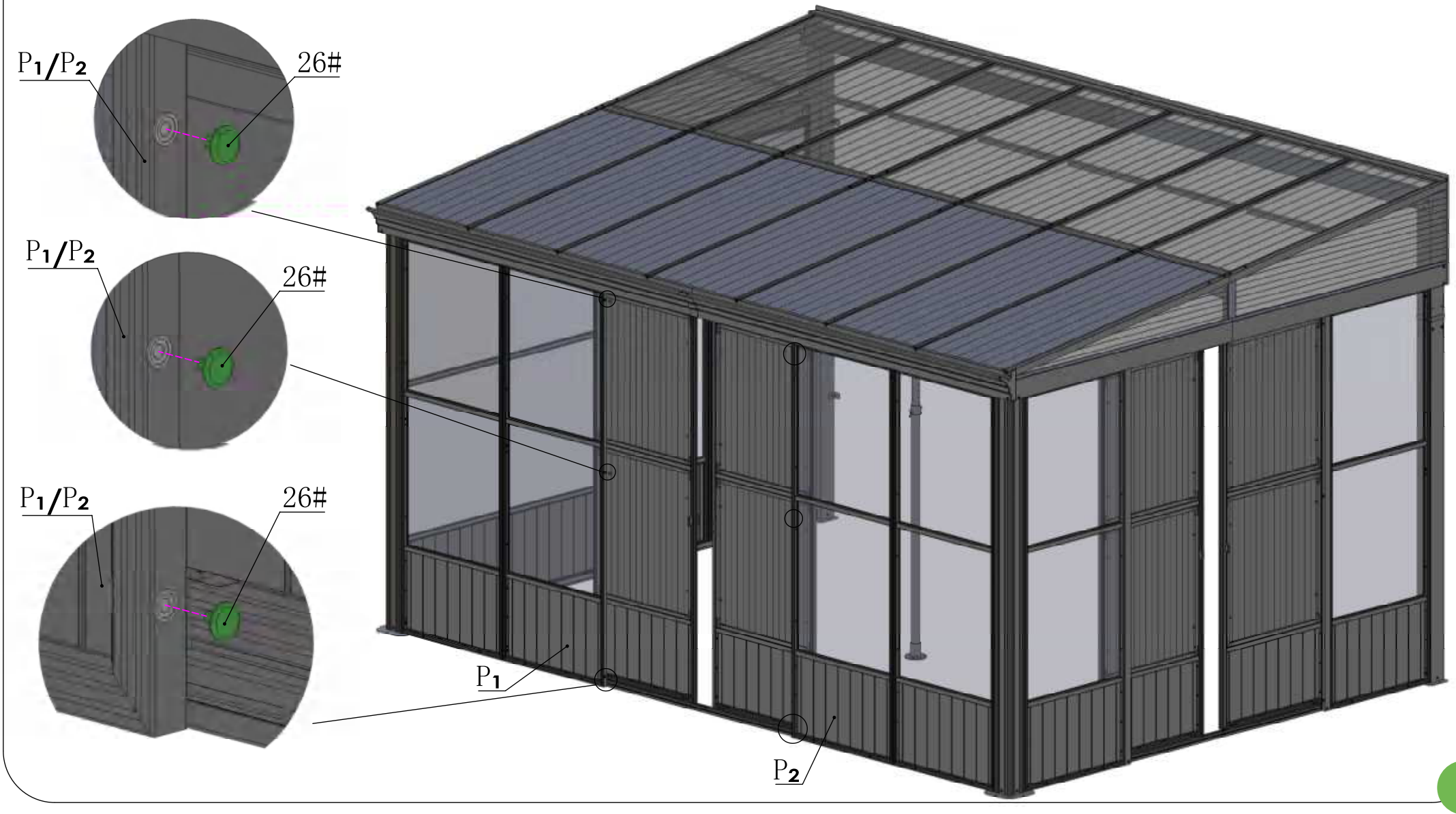

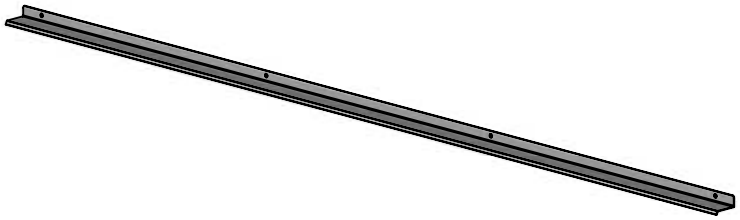

R1 2X

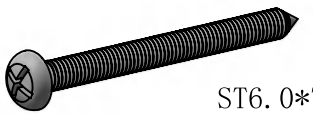

ST6. 0*70

9# 8X

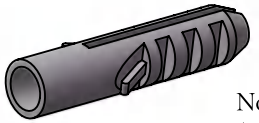

10# 8X

Note: If you do not consider fixing on the wall, you can skip this step. (This step requires drilling holes in the wall for fixing. The water stopper R1 should be installed tightly against the top of the sunroom.)

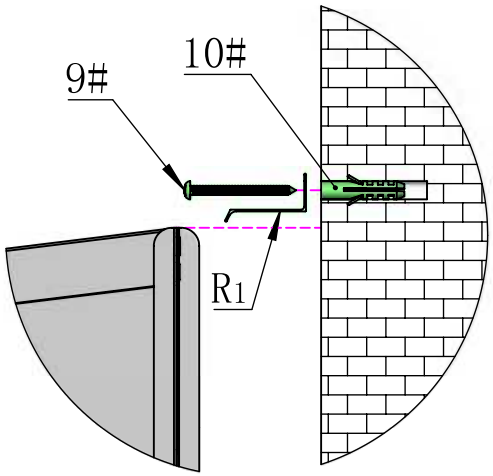

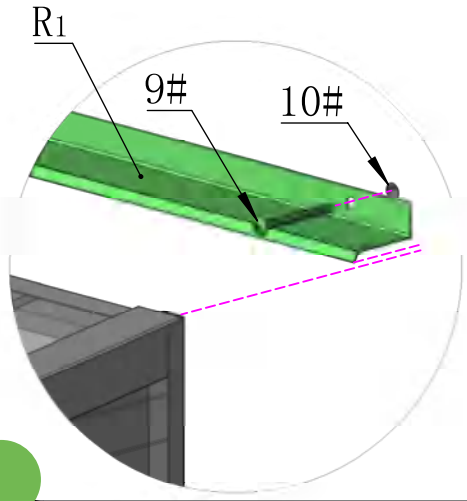

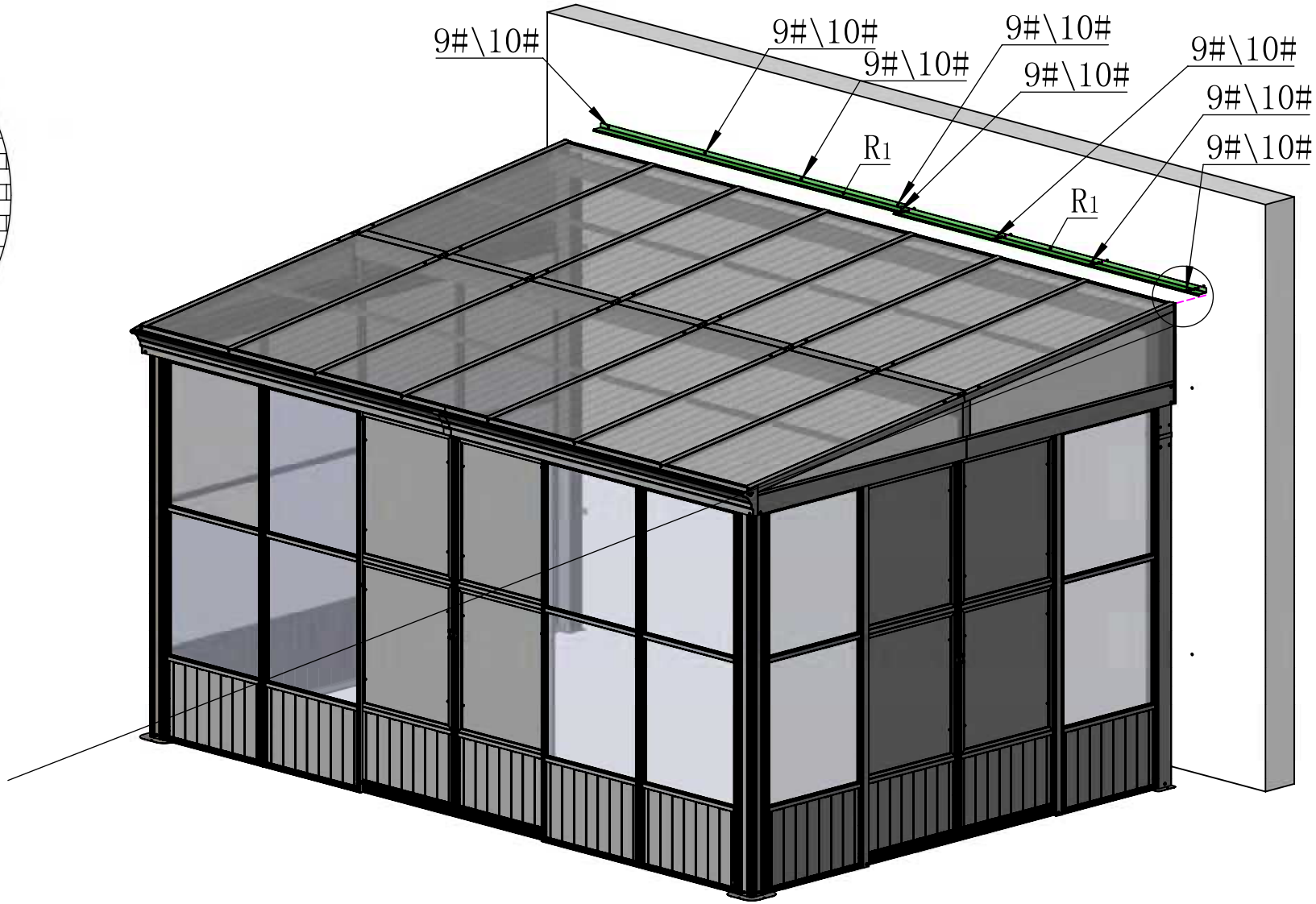


SILICONE

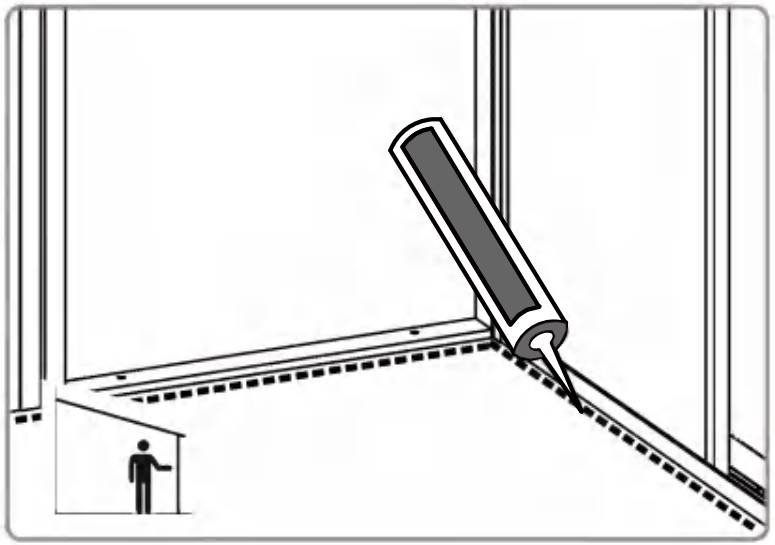

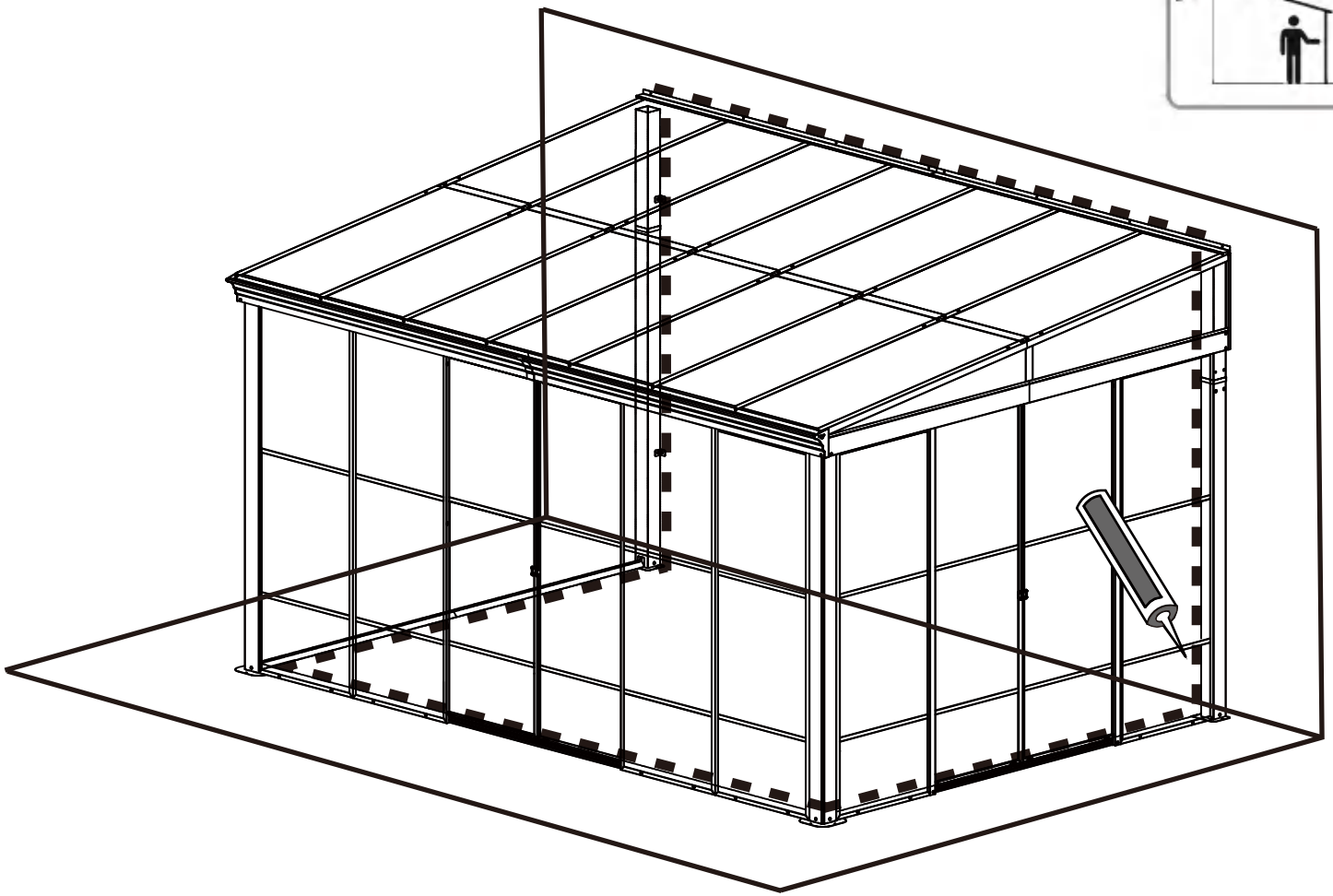

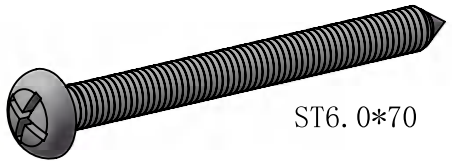

9# 6X

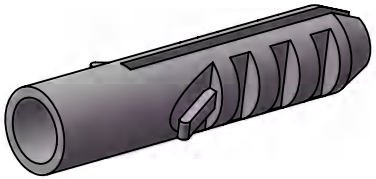

10# 6X

Note: If you do not consider fixing on the wall, you can skip this step.
(This step requires drilling holes in the wall for fixing.)

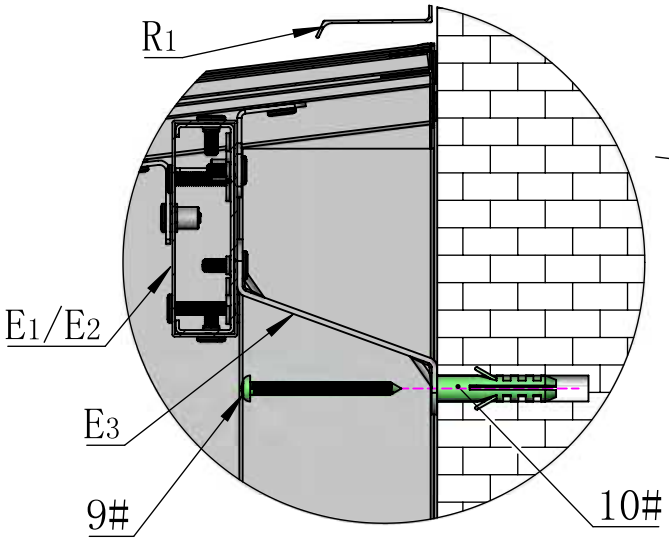

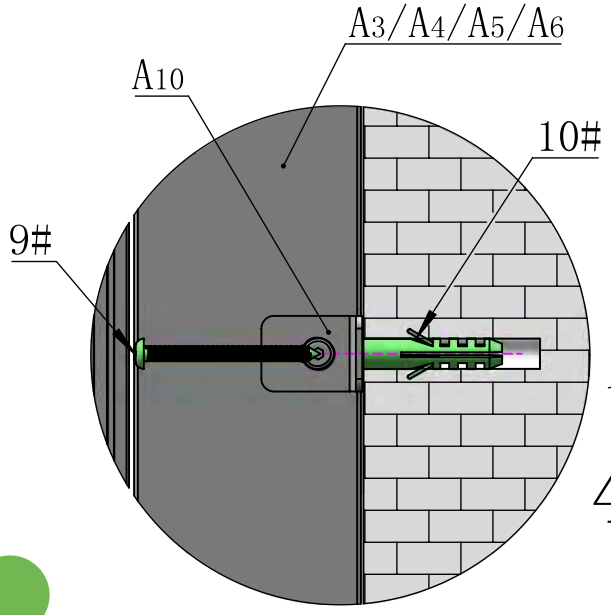

4X

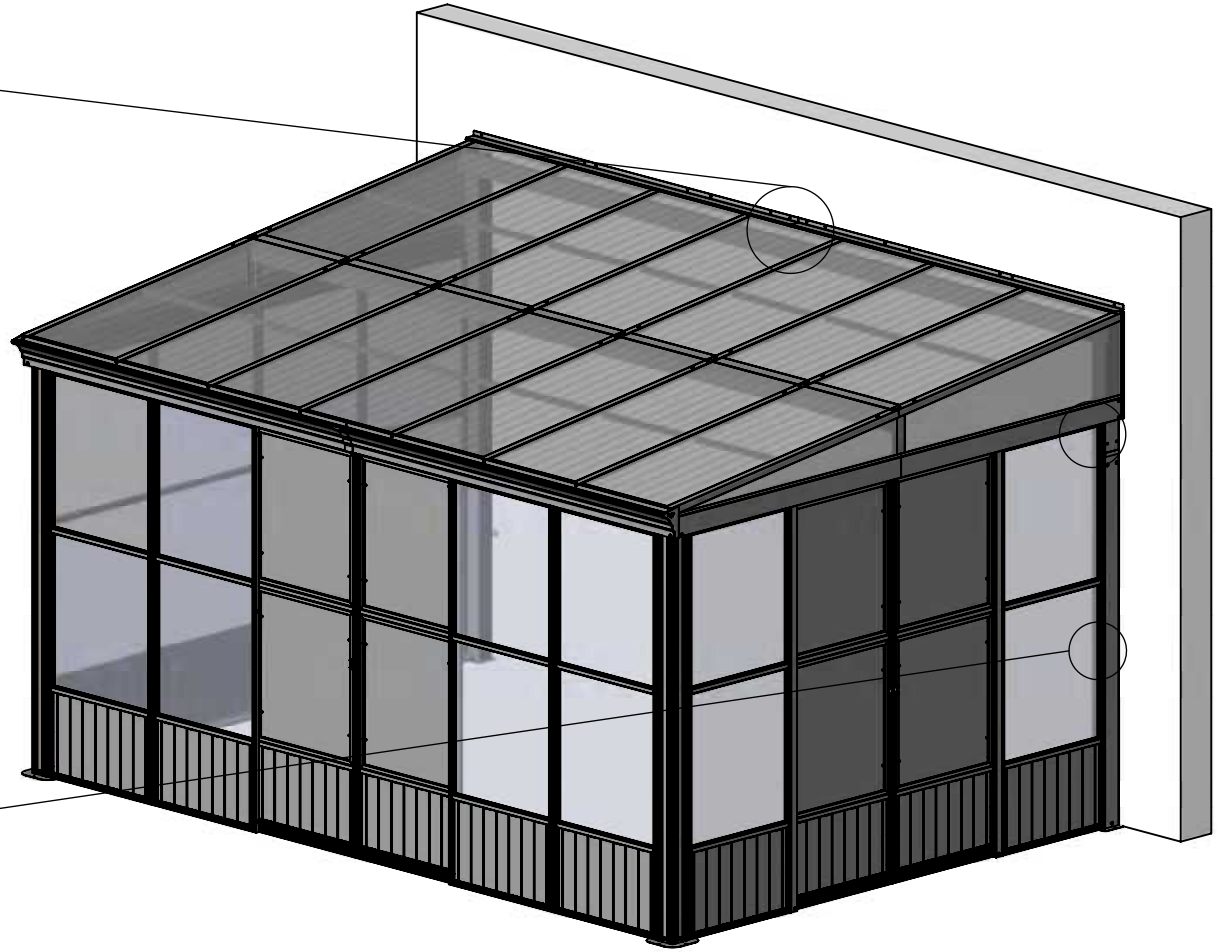

Install window panels to block mosquitoes, increase privacy, etc.
The window panels can be removed as well to improve ventilation.

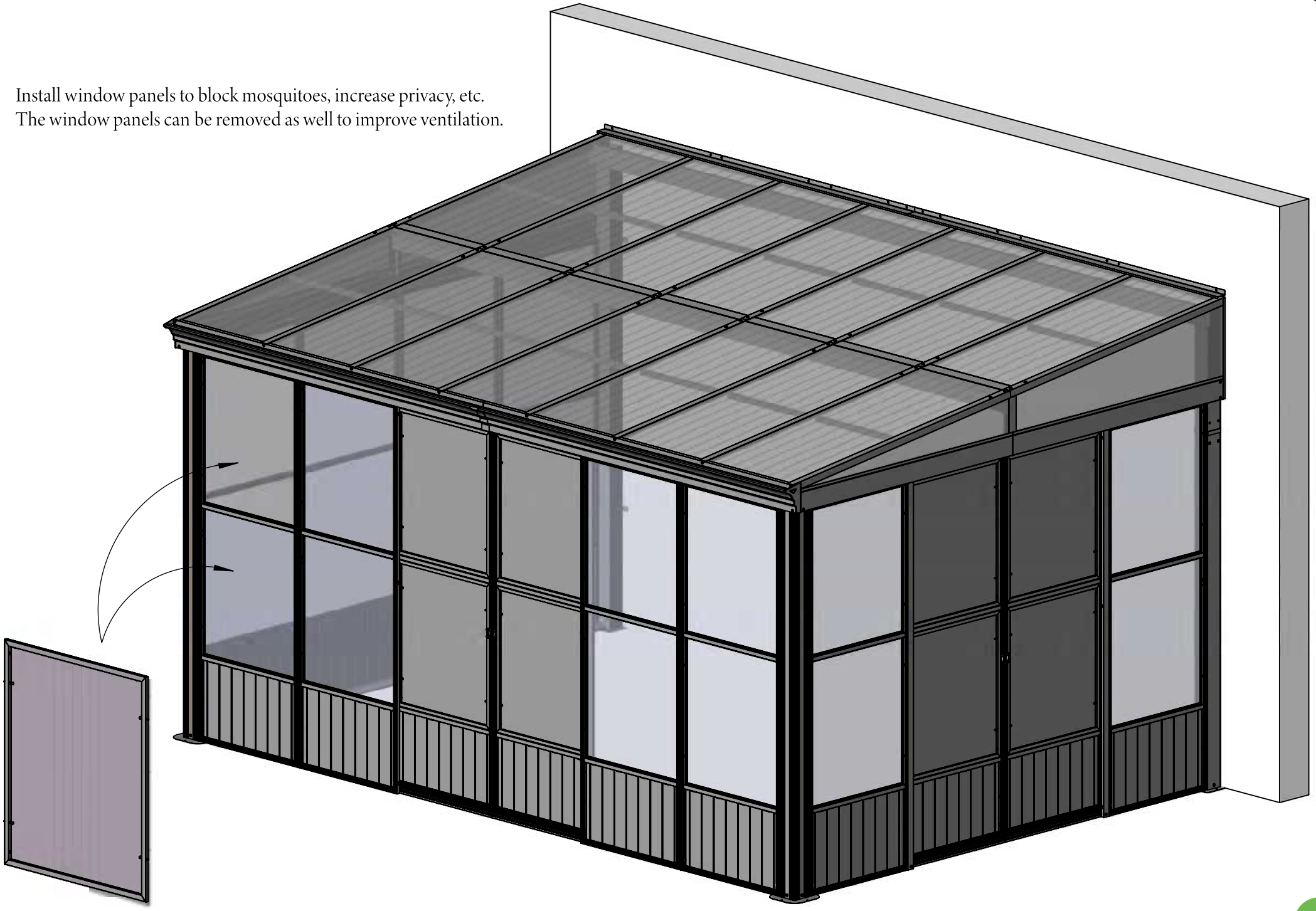

Care and Cleaning

Wash frame part with mild soap and water, rinse thoroughly.

Do not use bleach, or other solvents on the frame parts.

Please check periodically that the sunroom is anchored properly to the floor or ground to enjoy its safe usage.

Please check periodically that all screws are tight to maintain the solidity of the structure.

Please remove any snow accumulation at all times.

Warranty

Frames

Frames constructions are warranted to be free from defects in material and worksmanship for 1 year from item purchased. Damage to frame from negligence won't be covered by this warranty.

Bolts & nuts

Bolts and nuts are warranted to be free from defects in material and worksmanship for 1 year from item purchased. Damage from exposure to chemicals (including not only oils ,spills, fluids) won't be covered by this warranty.

Warranty Limitation

This warranty is for the original purchase order only. (Order number required). This warranty is non-transferable. Domi outdoor living is responsible for the free replacement part including shipping charges for the 1 year warranty.

Warranty Exclusion

This warranty does not cover products subject to negligence, abuse usage, inappropriate installation. Domi outdoor living reserves the right to explain warranty exclusions. When the replacement item is applied, the 1 year warranty automatically expires. Please feel free to contact us for applying warranty.

domi
outdoor living

RESORT COMFORT IN YONR

OWN BACKYARD

Support:

Business cooperation contact email:
marketing@domioutdoorliving.com

After-sales contact email:
service@domioutdoorliving.com

Please tell us your order ID when contact.

Attach photos of damaged part for instant reply.