ASSEMBLY INSTRUCTIONS

500605-24. 500605-30. 500605-36.

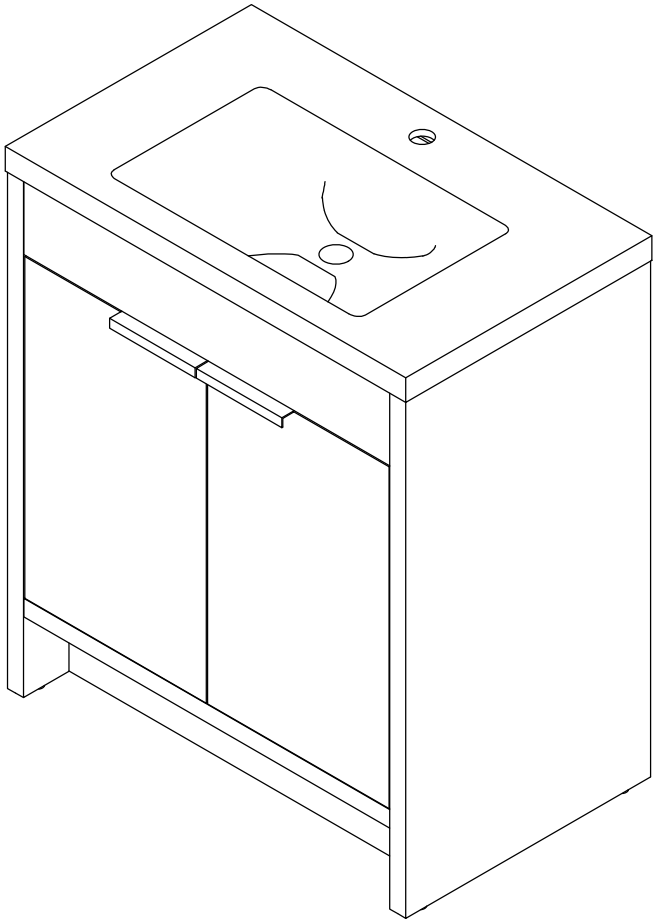

1 x 1

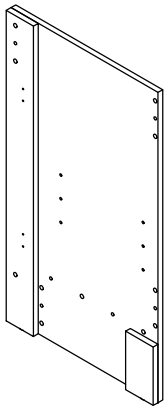

2 x 1

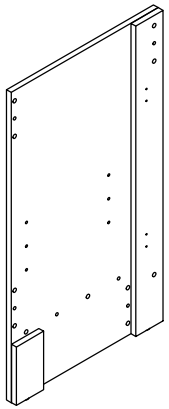

3 x 1

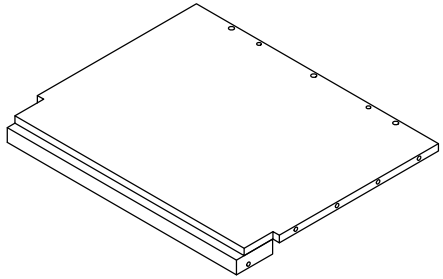

4 x 1

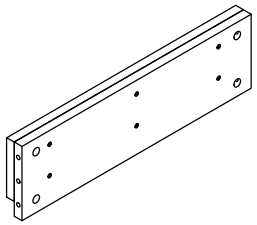

5 x 1

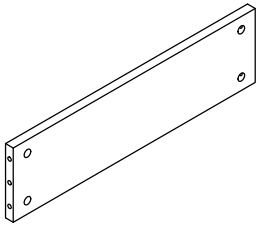

6 x 1

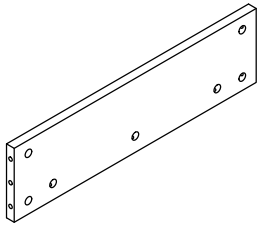

7 x 1

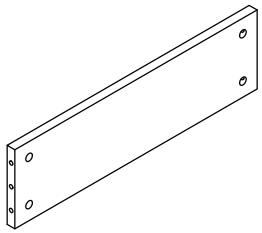

8 x 1

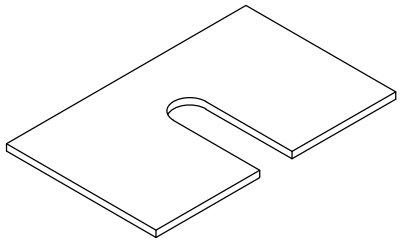

9 x 2

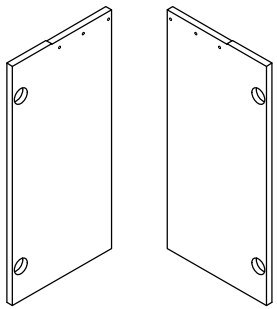

A x 25

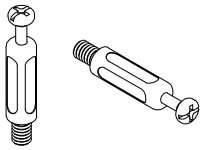

B x 25

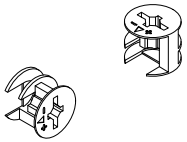

C x 14

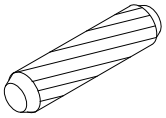

D x 4

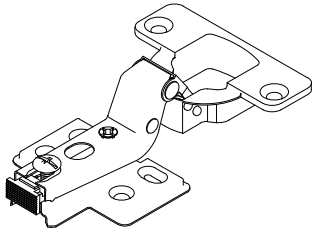

E x 2

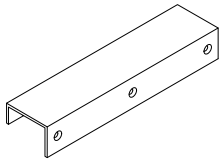

F x 4

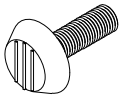

G x 4

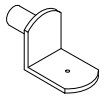

H x 1

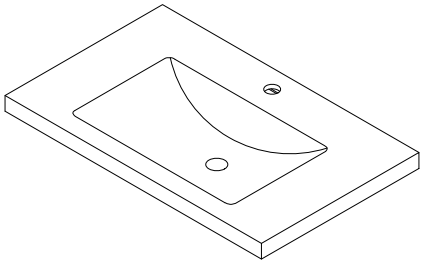

I x 24
(3.5*14mm)

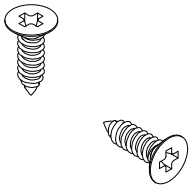

J x 6
(3.5*14mm)

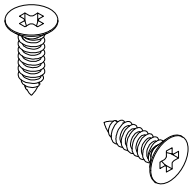

K x 25

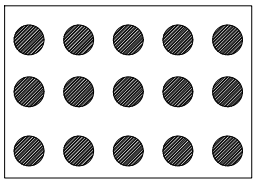

L x 4

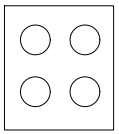

Step 1

Ⓐ x 22

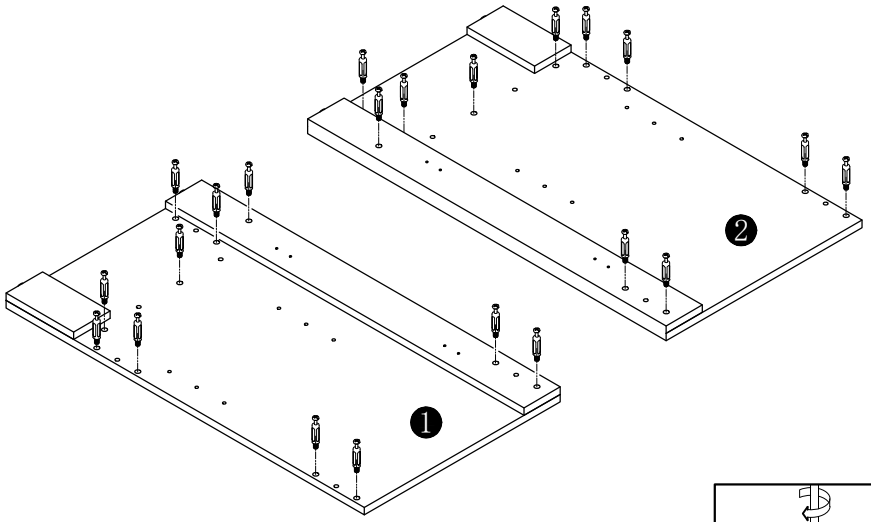

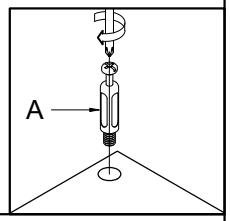

Step 2

Ⓐ x 3

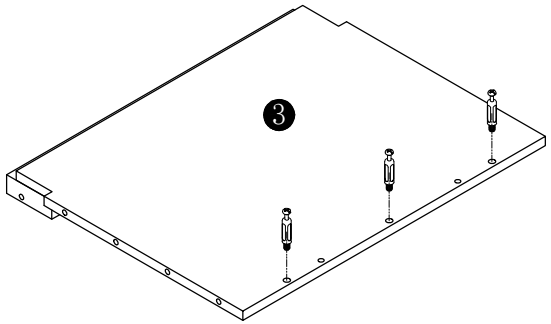

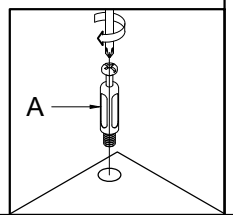

Step 3

Ⓑ x 3

Ⓒ x 2

Ⓚ x 3

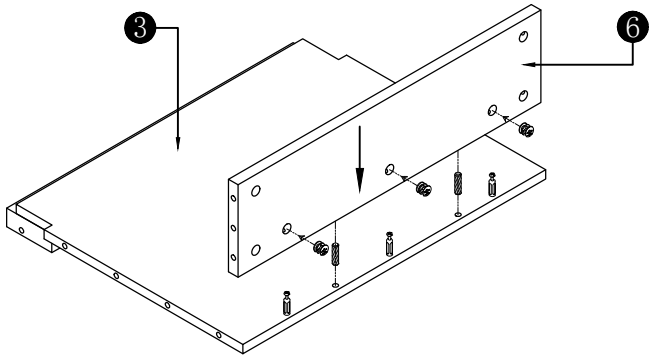

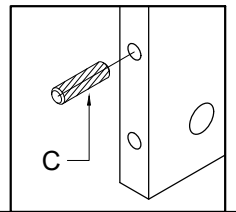

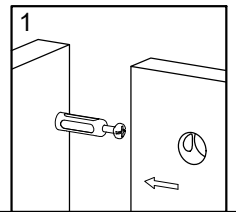

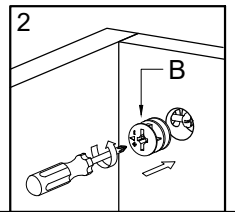

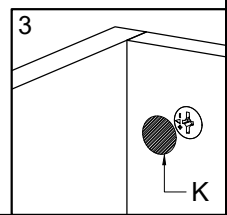

Step 4

- (B) x 22
- (C) x 12
- (K) x 22
- (F) x 4

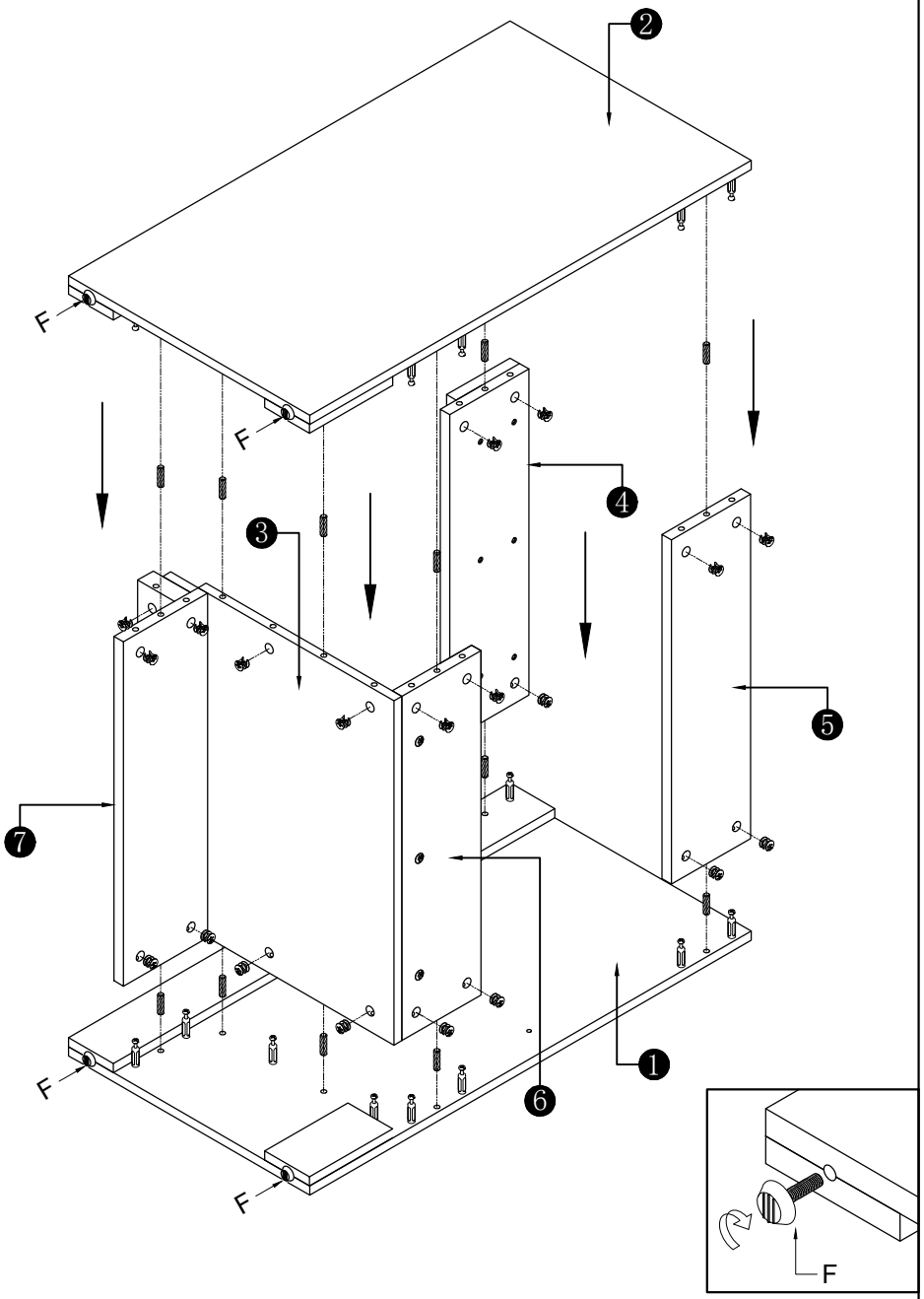

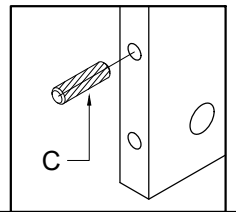

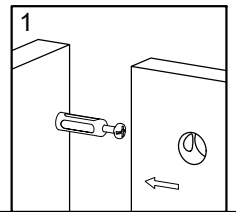

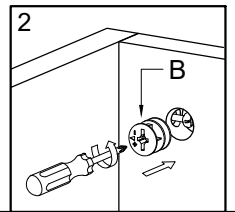

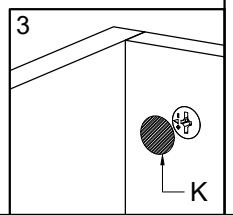

Step 5

- (G) x 4

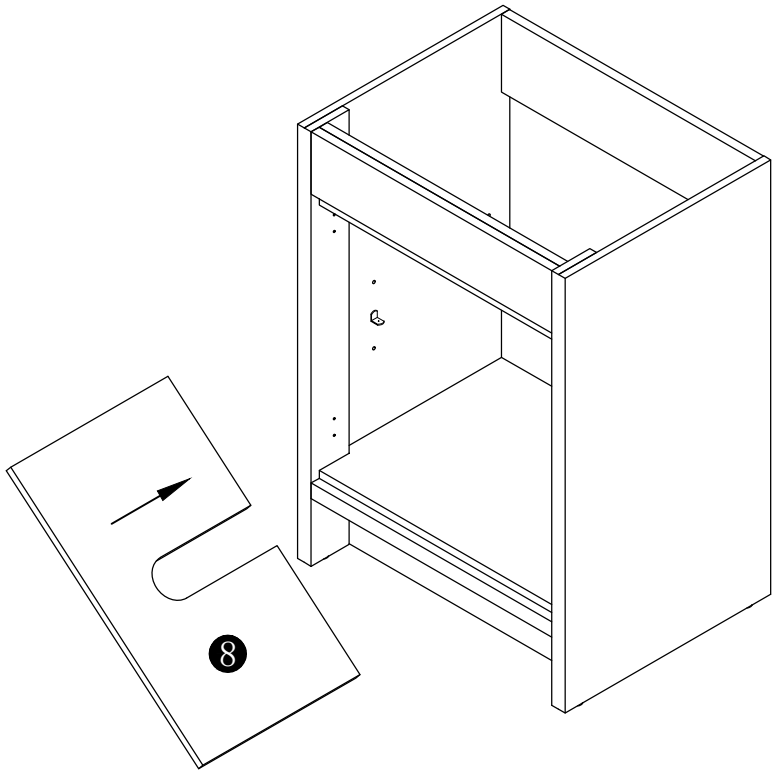

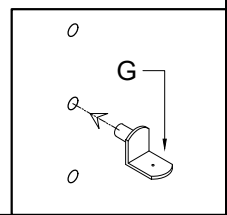

Step 7

- (D) x 4
- (E) x 2
- (I) x 24
- (J) x 6
- (L) x 4

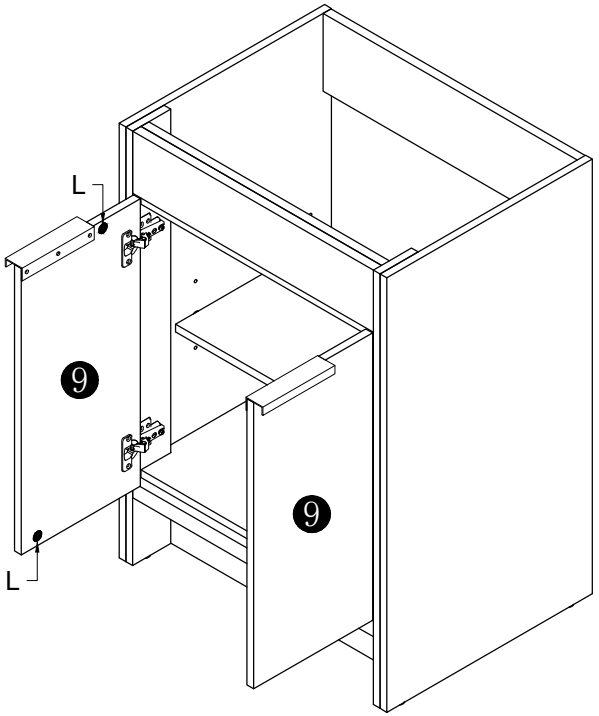

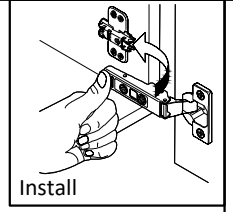

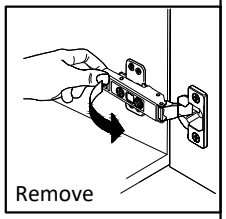

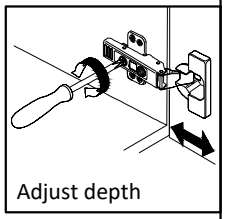

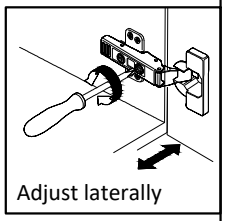

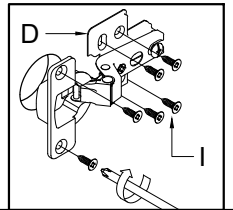

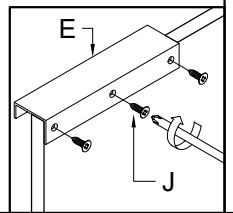

Step 8

- (H) x 1

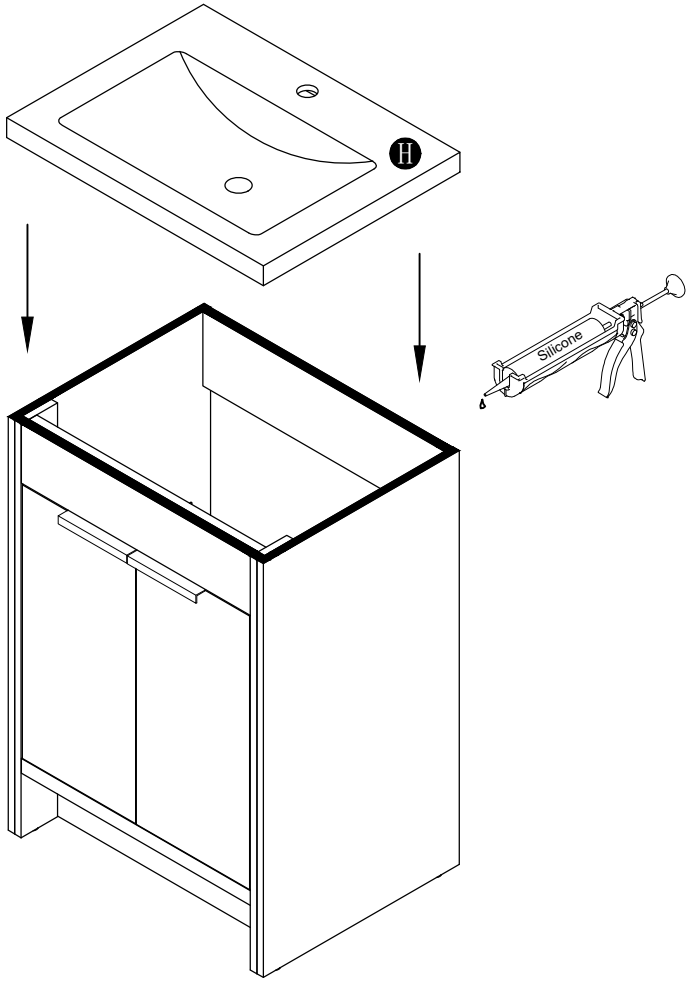

Complete

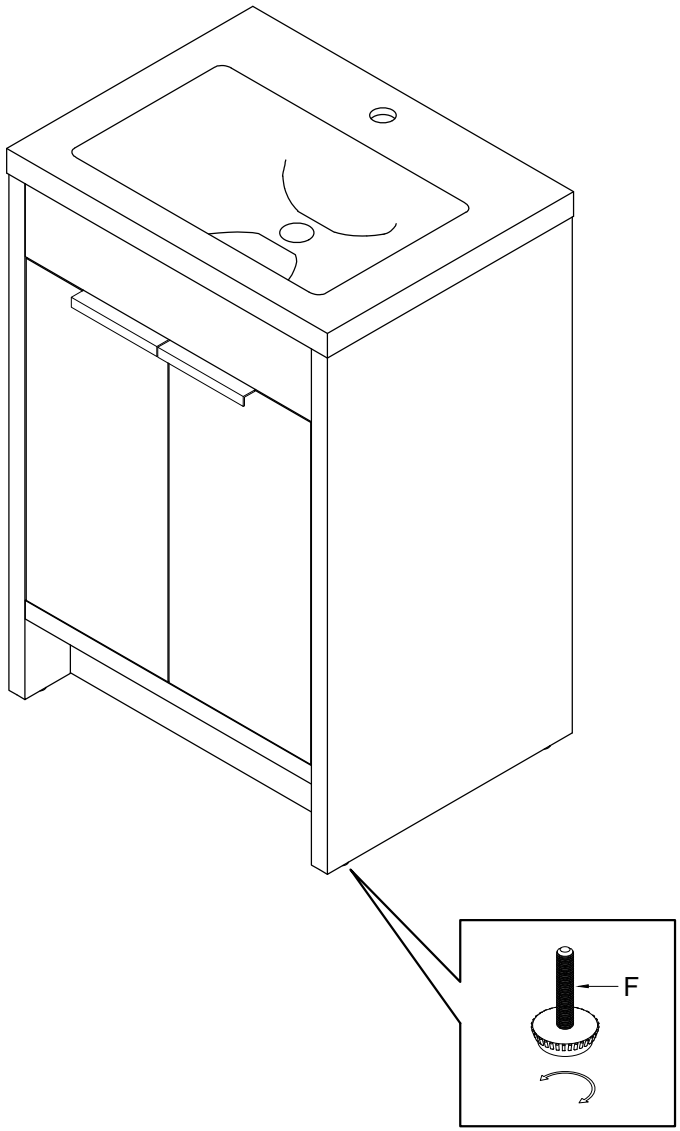

Keep your **Bellaterra Home** resin sink looking **beautiful** and performing at its **best** by following these simple care instructions.

✨ Initial Cleaning (Upon Receipt)

- Use a **neutral, transparent cleaning agent** to clean the surface.
- Wipe thoroughly with a **clean, lint-free towel** until completely dry.

🪵 Matte-Finish Sink Care

- If you notice **fine particles** on the surface, use the **included sandpaper** to **gently sand** in a **single, consistent direction**.
- Apply **light pressure** to avoid surface damage.

🛡️ Prevent Scratches

- Avoid placing **sharp or hard objects** (e.g., knives, nail files, metal clips) directly on the basin.
- Use **anti-slip pads** or **soft coasters** under soap dishes, cosmetic containers, and other bathroom items to reduce friction and prevent scratches.

🚫 Avoid Harsh Chemicals

- **Do not use** strong acidic or alkaline cleaners, such as **toilet bowl cleaners** or **concentrated descalers**.
- These can **corrode**, **discolor**, or **dull** the resin surface.
- Always choose **mild, neutral cleaning products** for daily maintenance.

🧼 Remove Stains Promptly

- Wipe off **colored liquids** (e.g., hair dye, tinted cleansers, colored mouthwash) and **pigmented cosmetics** immediately.
- Use a **neutral cleaning agent** to prevent stains from setting into the resin surface.

☀️ Protect from Sunlight

- Avoid exposing your sink to **direct sunlight** or **high heat** for prolonged periods.
- Excessive exposure may cause **fading**, **discoloration**, or **surface cracking**.

Quick Tips

- ✅ Clean regularly using mild products
- ✅ Wipe dry after each use to maintain shine
- ❌ Do not scrub aggressively
- ❌ Do not expose to extreme temperatures

Need Help? We're Here for You!

- If you have any questions or issues with your resin sink top, please feel free to contact us.
- If possible, include images or a short video of the problem area when emailing us.
- This helps us troubleshoot issues quickly and provide faster support.

Bellaterra Home Customer Support
Email: info@bellaterrahome.com
Phone: 1-888-928-9918
Website: www.bellaterrahomes.com