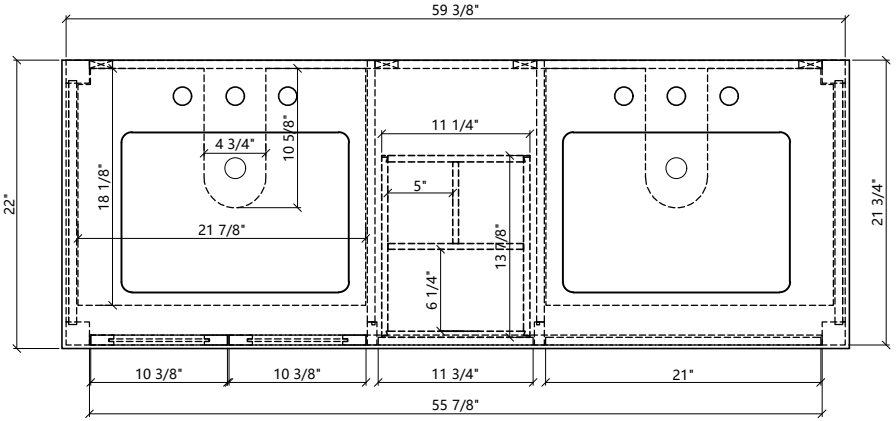
59 3/8"
22"
18 1/8"
4 3/4"
10 5/8"
21 7/8"
11 1/4"
5"
13 3/8"
6 1/4"
21 3/4"
10 3/8"
10 3/8"
11 3/4"
21"
55 7/8"

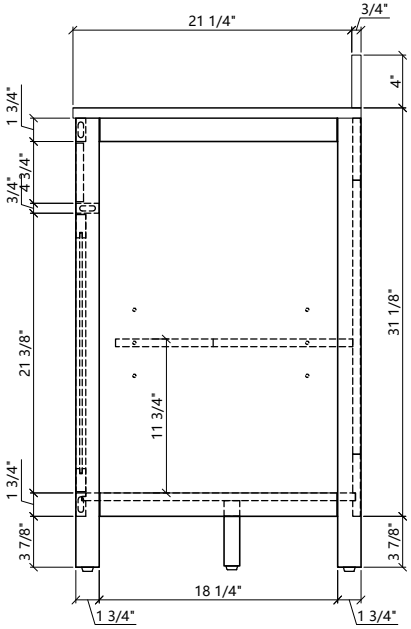
21 1/4"
3/4"
4"
1 3/4"
3/4"
4 3/4"
21 3/8"
11 3/4"
31 1/8"
1 3/4"
3 7/8"
3 7/8"
18 1/4"
1 3/4"
1 3/4"

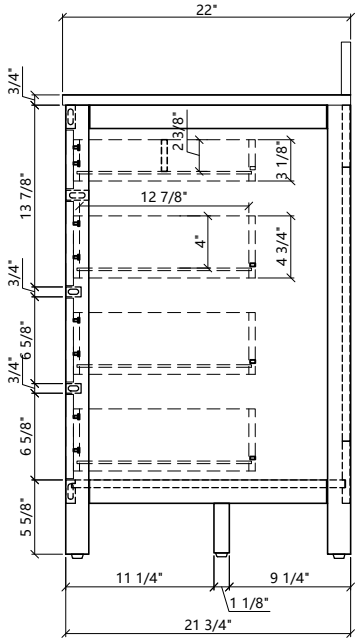
22"
3/4"
2 3/8"
3 1/8"
13 7/8"
12 7/8"
4"
4 3/4"
3/4"
6 5/8"
3/4"
6 5/8"
5 5/8"
11 1/4"
9 1/4"
1 1/8"
21 3/4"

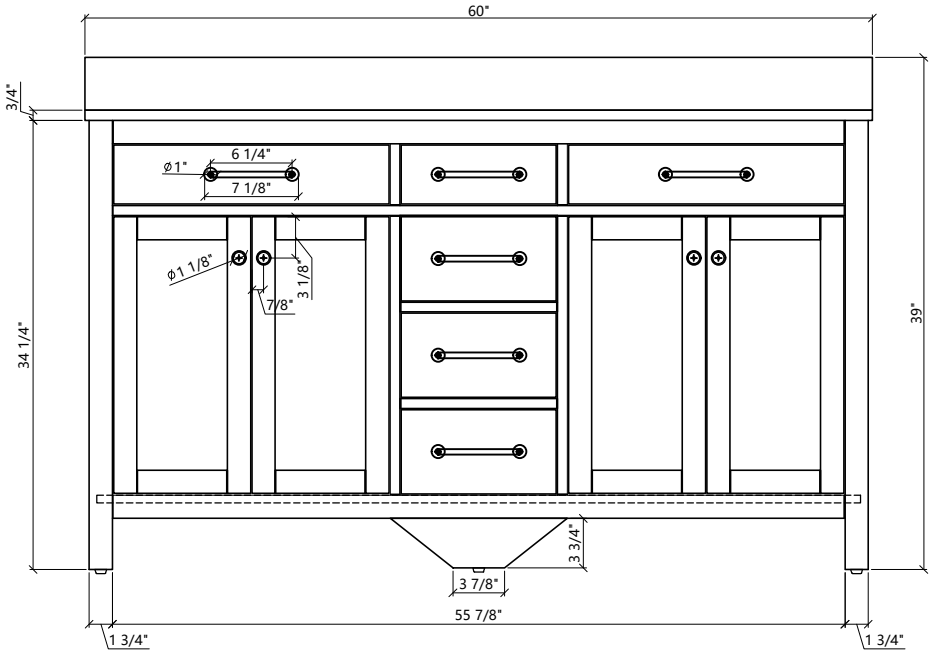
60"
3/4"
6 1/4"
ø1"
7 1/8"
ø1 1/8"
3 1/8"
7/8"
34 1/4"
39"
3 3/4"
3 7/8"
55 7/8"
1 3/4"
1 3/4"

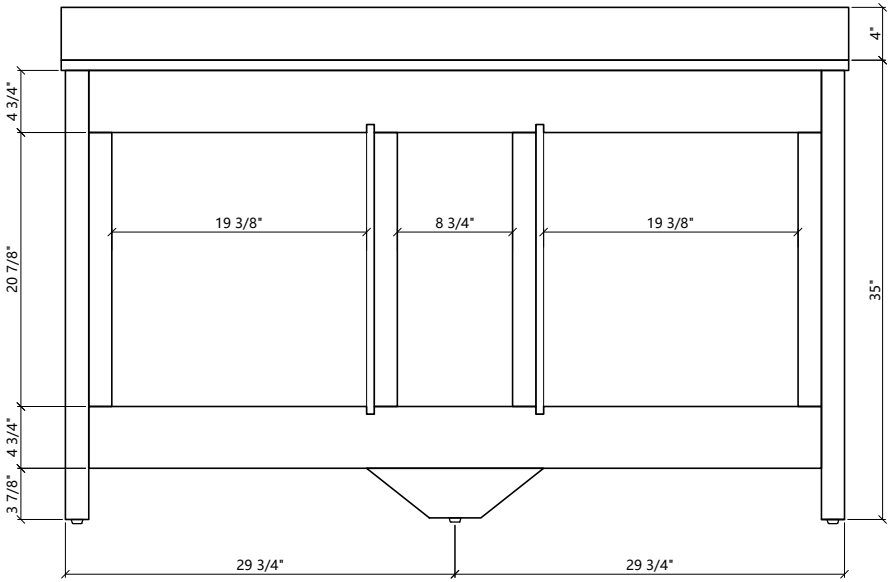
4"
4 3/4"
19 3/8"
8 3/4"
19 3/8"
20 7/8"
35"
4 3/4"
3 7/8"
29 3/4"
29 3/4"

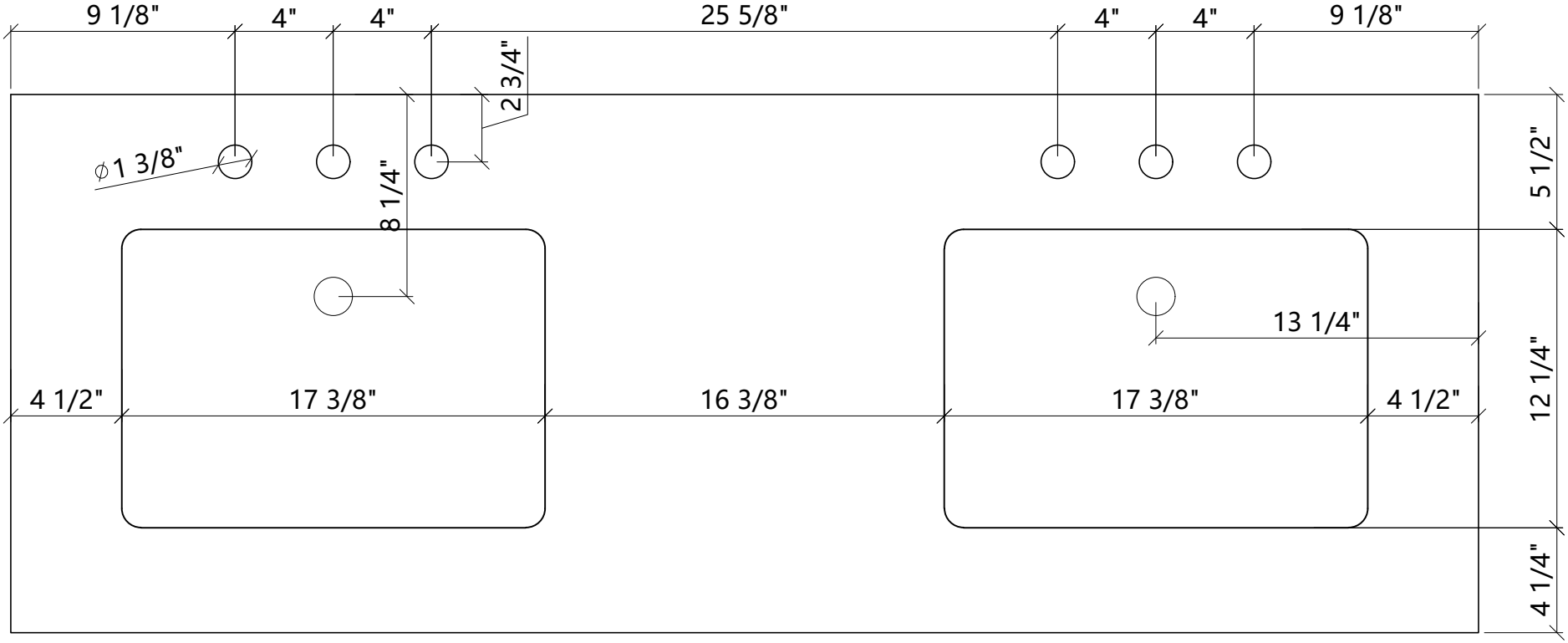
9 1/8"
4"
4"
25 5/8"
4"
4"
9 1/8"
2 3/4"
⌀1 3/8"
8 1/4"
5 1/2"
13 1/4"
12 1/4"
4 1/2"
17 3/8"
16 3/8"
17 3/8"
4 1/2"
4 1/4"

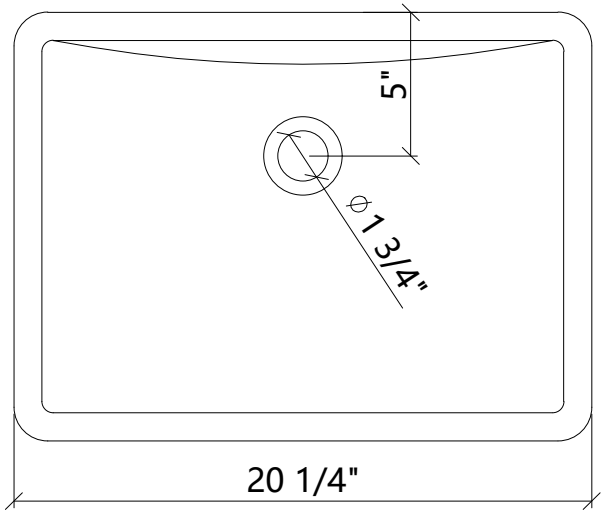
5"
ϕ 1 3/4"
20 1/4"

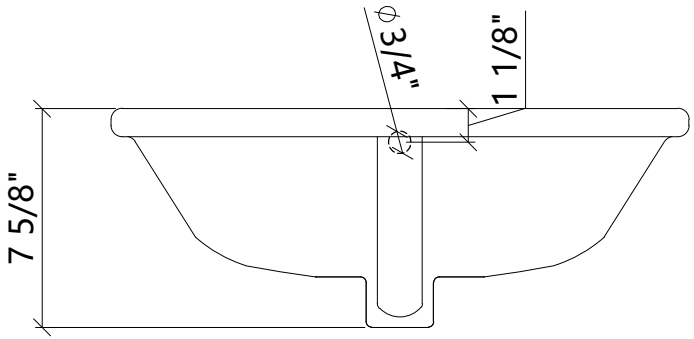
ϕ 3/4"
1 1/8"
7 5/8"

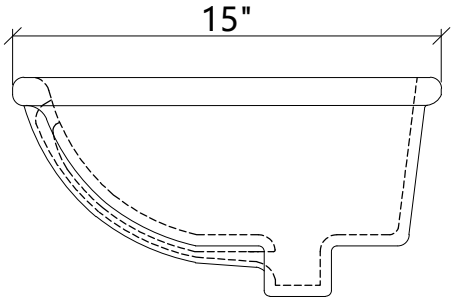
15"