Let's install the

Bilson Wall Light

SKU 12560

45 MINUTE ASSEMBLY

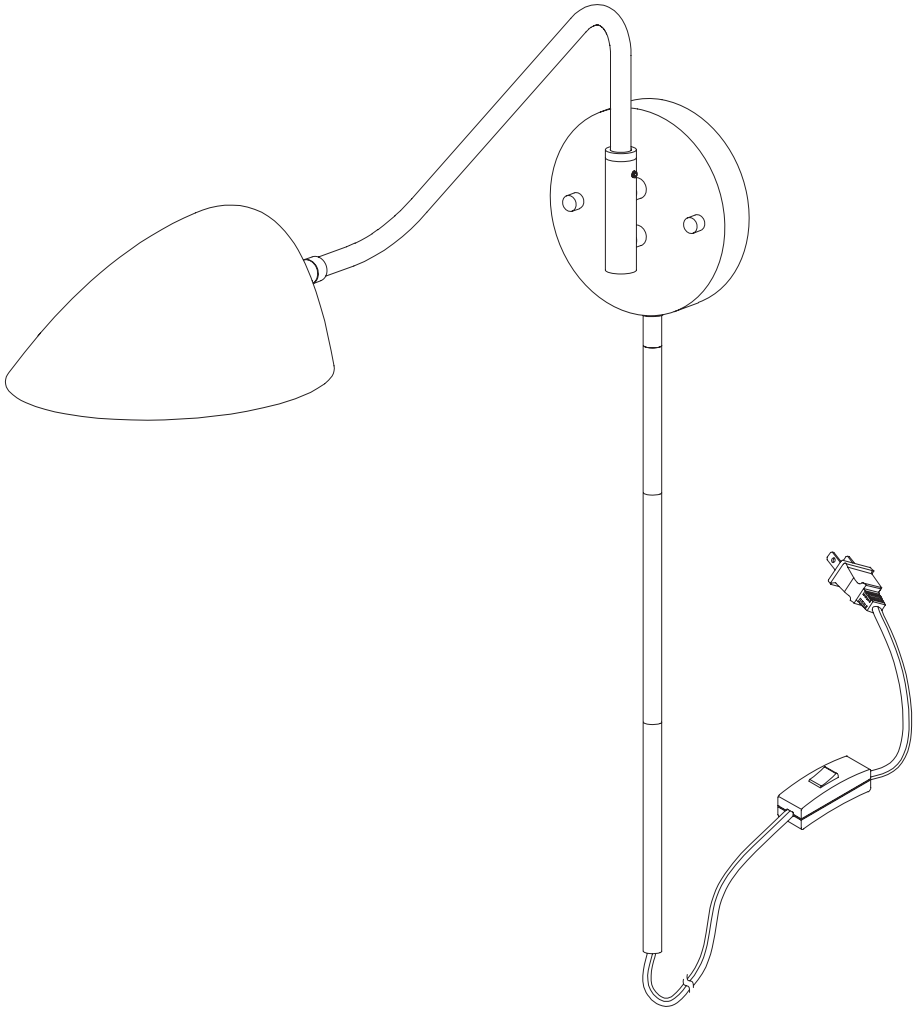

Scan me!

Free Lifetime Guarantee

nathan james

26-0702-CN

Ok, let's get rolling

This should be easy, just follow our instructions and you will be back to Netflix in no time.

Estimated time for assembly

45:00

What you need

- Your favorite snack or energy bar (Save the bubbly for once your fixture is safely installed!)
- Use the packaging carton as a working surface to prevent product damage during assembly
- Phillips head screwdriver
- Pencil
- Electric drill
- 1/4" Drill bit (for wall anchors)
- Mallet or hammer (for plug-in installation)
- Wire strippers
- Wire cutters

Toll-free at 1-866-619-1004
Help@nathanjames.com
Nathanjames.com/help

What's included

	Description	Qty
A	Fixture	1
B	Stem (6")	1
C	Stem (12")	1
D	Stem (12")	1
E	M10 x 25mm Threaded Insert	1
F	M3.5 x 35mm Screws	3
G	Wall Anchors	3
H	Mounting Plate (Plug-in)	1
I	Finial Nut	2
J	M4 x 26mm Mounting Screws	2
K	Plastic Cap	1
L	Mounting Plate (Hardwired)	1
M	Wire connector	1
N	Allen Key	1
O	Wrench	1

Scan me!
Free Lifetime Guarantee

Safety first, fun later

Safe use of this product starts with you.

Use this light fixture responsibly with the primary concern for your safety. Follow assembly instructions carefully and inspect product upon receipt and each use.

Nathan James and its parent companies cannot be held legally responsible for any injuries or death resulting from failure to follow instructions or improper use of this product.

Do not modify the structure of this product in any way.

Our products have been tested to meet specific safety measures as they were originally intended to be sold. Any modifications will present the risk of creating significant safety issues which Nathan James will not be responsible for.

Proper use

DO NOT	use for commercial purposes
DO NOT	leave spilled liquid on fixture
DO NOT	use light fixture if damaged
DO NOT	make temporary repairs
DO NOT	use outdoors

WARNING

Inspect the wire insulation for any cuts, abrasions, or exposed copper that may have occurred during shipping. If there is a defect in the wire, do not attempt installation. Please reach out to our Customer Happiness team at help@nathanjames.com or 1-866-619-1004

WARNING: RISK OF ELECTRIC SHOCK

Before starting the installation, disconnect the power by turning off the circuit breaker or by removing the appropriate fuse at the fuse box. Turning the power off at the switch is NOT SUFFICIENT to prevent electrical shock. PLEASE CONSULT A QUALIFIED ELECTRICIAN IF YOU HAVE ANY ELECTRICAL QUESTIONS.

The goods

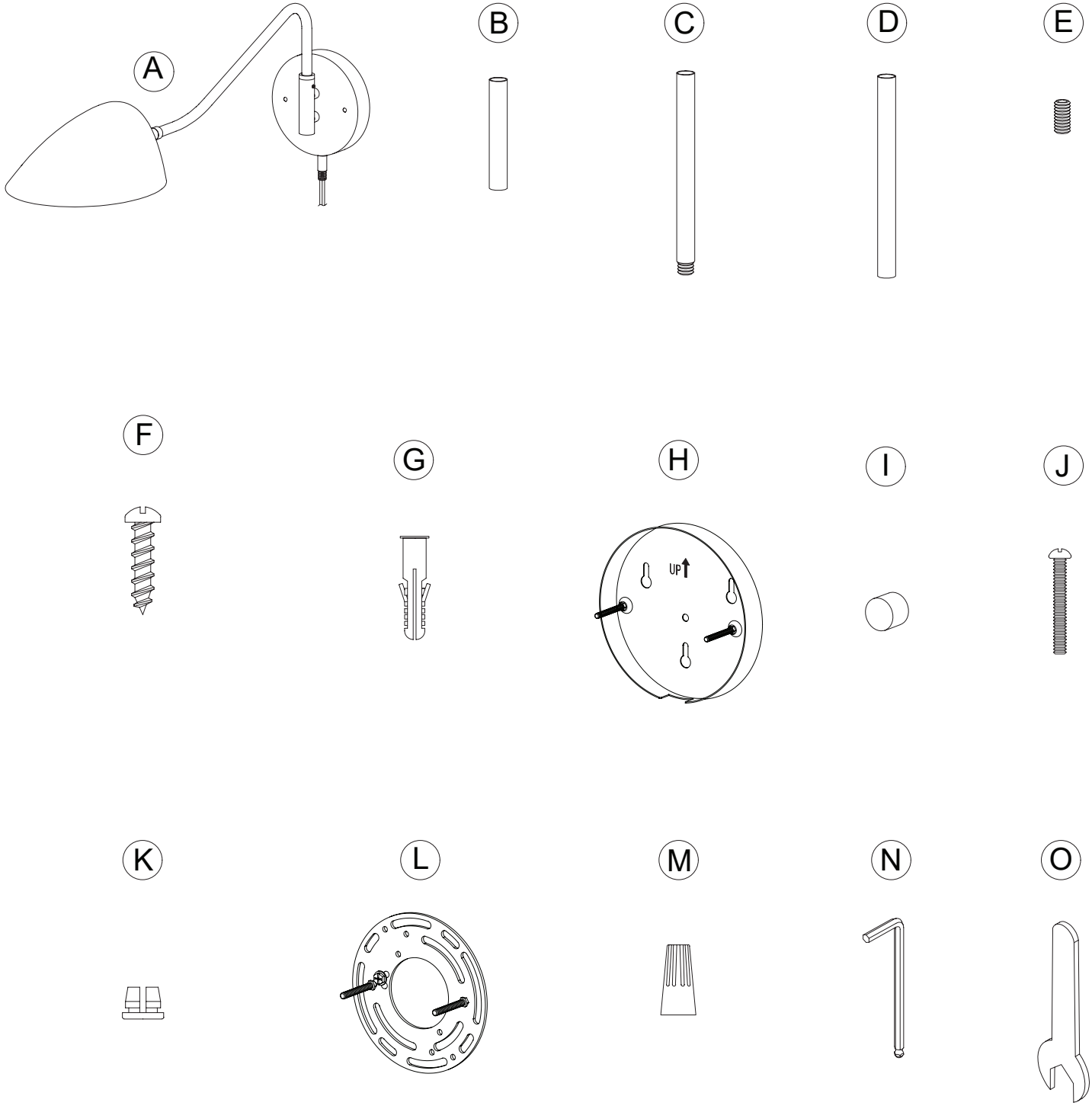

IMPORTANT

1. Do not tighten bolts / screws completely until all bolts / screws are lined up and inserted into holes.

2. Do not over-tighten screws and bolts to avoid stripping.

3. Please use hand tools to assemble this product. Do not use power tools.

Pre-Installation

- Read all instructions prior to beginning assembly.
- To avoid damaging this product, assemble it on a soft, non-abrasive surface such as carpet or cardboard.
- Keep the receipt and these instructions for proof of purchase.
- Suggested Bulb: A19 LED 60 Watt Equivalent | E26 Medium Base | Dimmable
- Fixture Max Wattage: 60W

Plug-in option

The following steps 1–16 are intended for wall mounted plug-in use only. Skip ahead to page 19 for directions on how to hardwire this light into your existing electrical box.

Step 1

It's as easy as it looks! Separate the Fixture (A) from the Mounting Plate (H) by removing the Finial Nuts (I).

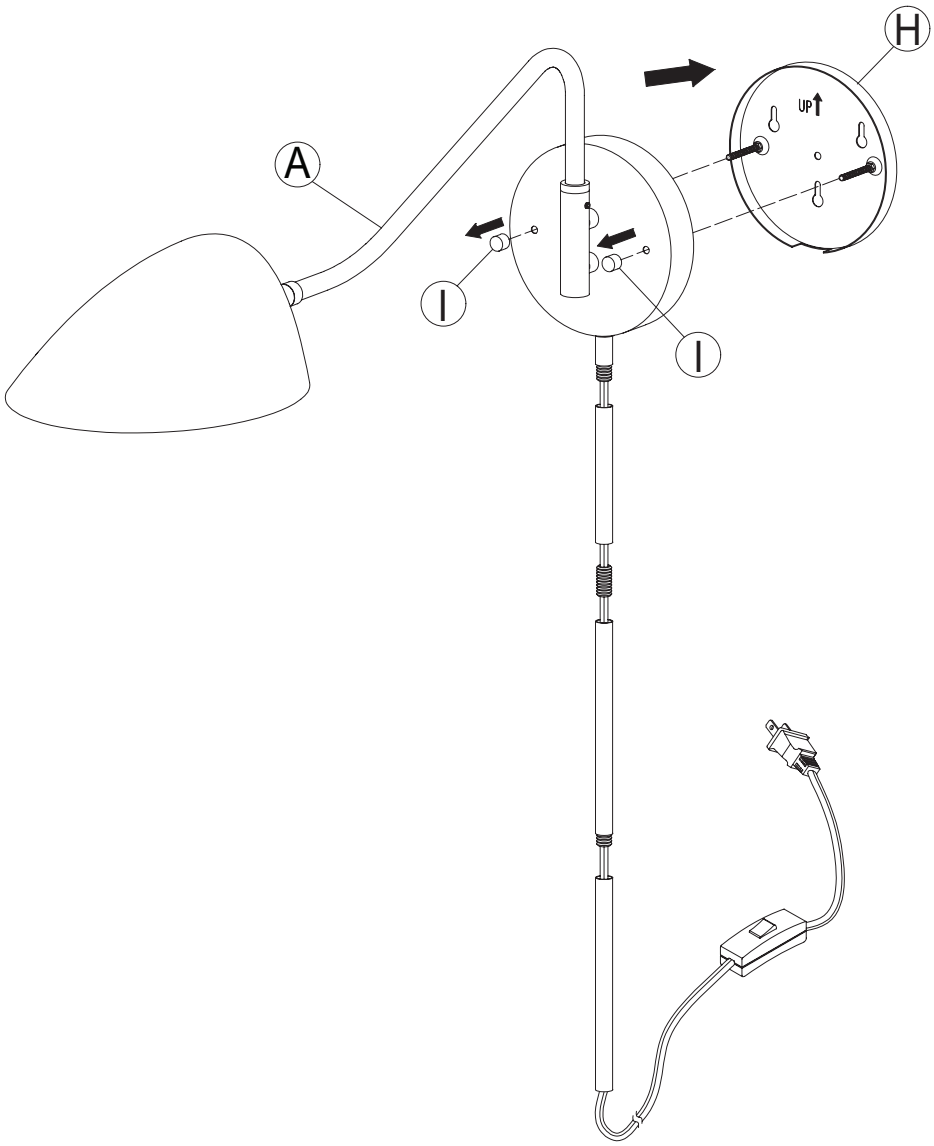

Step 2

Behold the wire compartment!

Carefully raise the flap on the wire connector to release the black.
Repeat this step on the second connector so that both black wires have been removed and the black + white wires remain attached to the Fixture (A).

Once the wires have been disconnected, remove the screw from the plastic bracket, as shown below, then untie the knot that has kept the two wires intertwined.

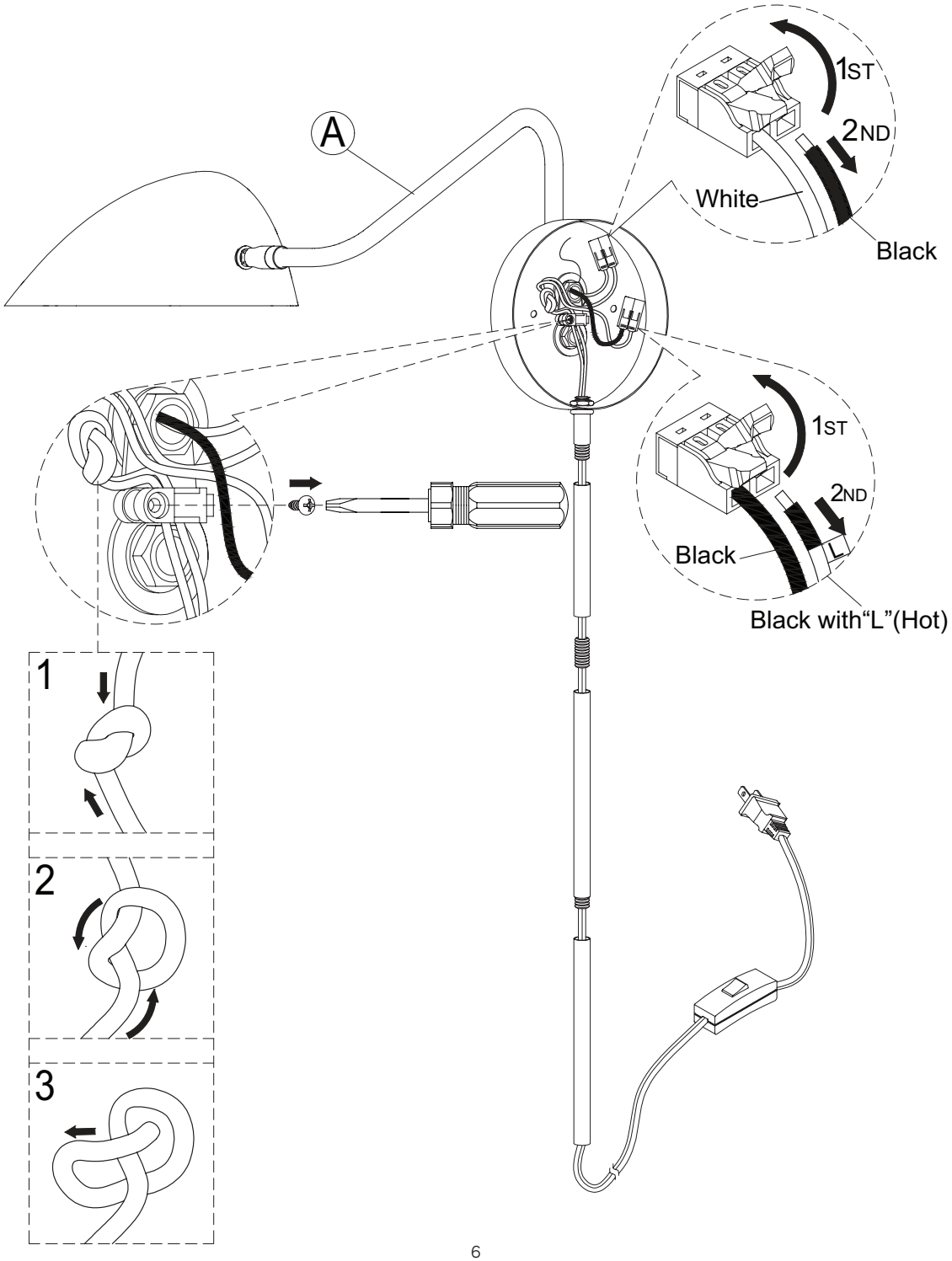

Step 3

Voila! With the knot untied, it's time to remove the wire for the time being. Carefully pull the cord through the bottom hole of the Fixture (A) by giving it a gentle tug to guide it all the way out.

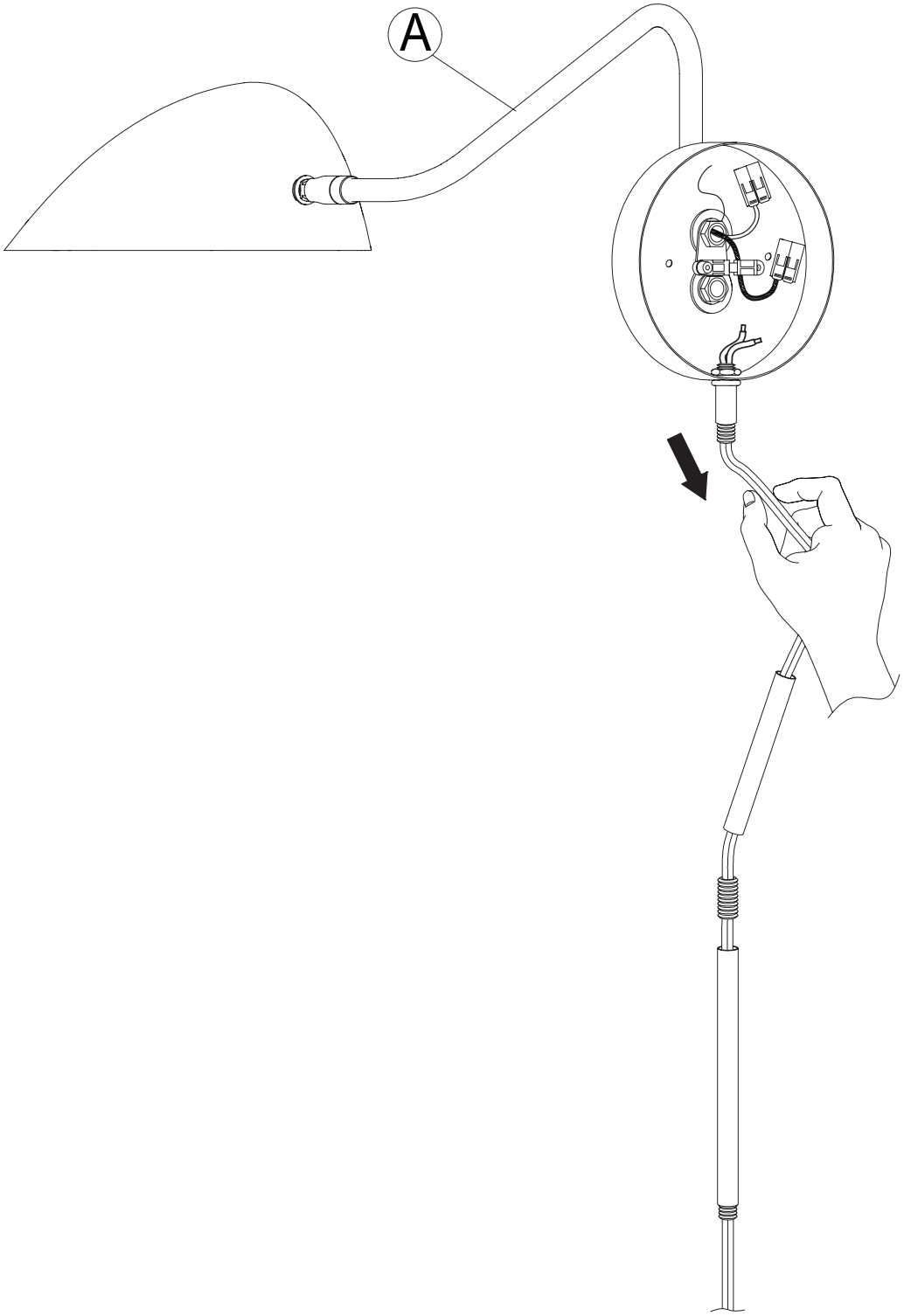

Step 4

Now comes the fun part: deciding how tall your fixture should be. You have the power to choose the perfect length by mixing and matching various Stem lengths or leaving some out completely.

6" cord : B

12" cord : D

18" cord : B E D

24" cord : C D

30" cord : B E C D

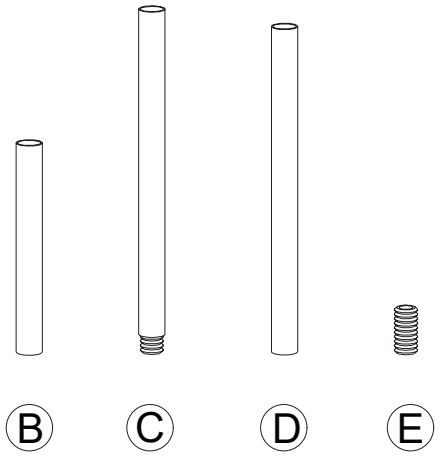

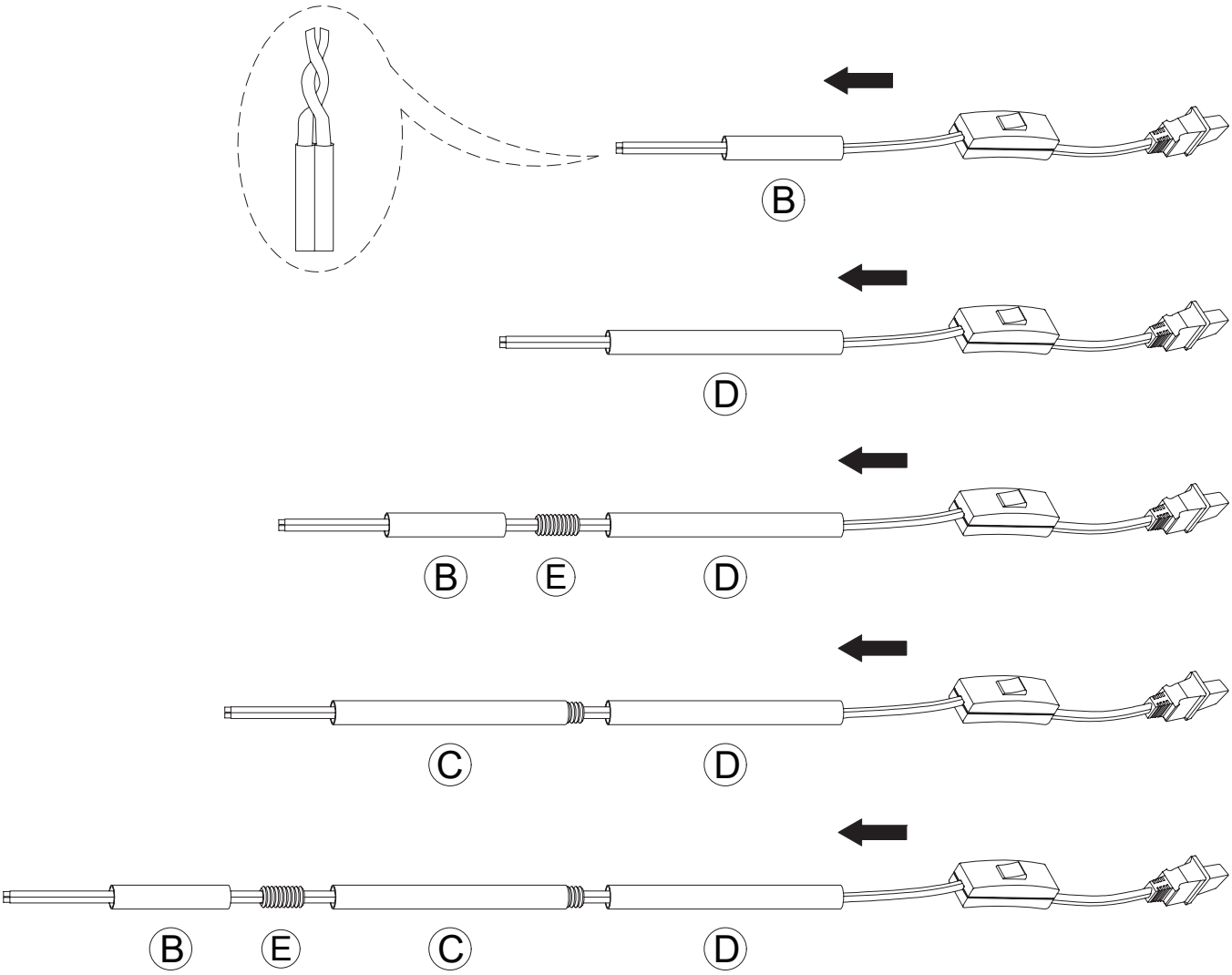

Step 5

Now it's time to guide the wires back through the hole at the bottom of the Fixture (A) - it's like threading a needle.

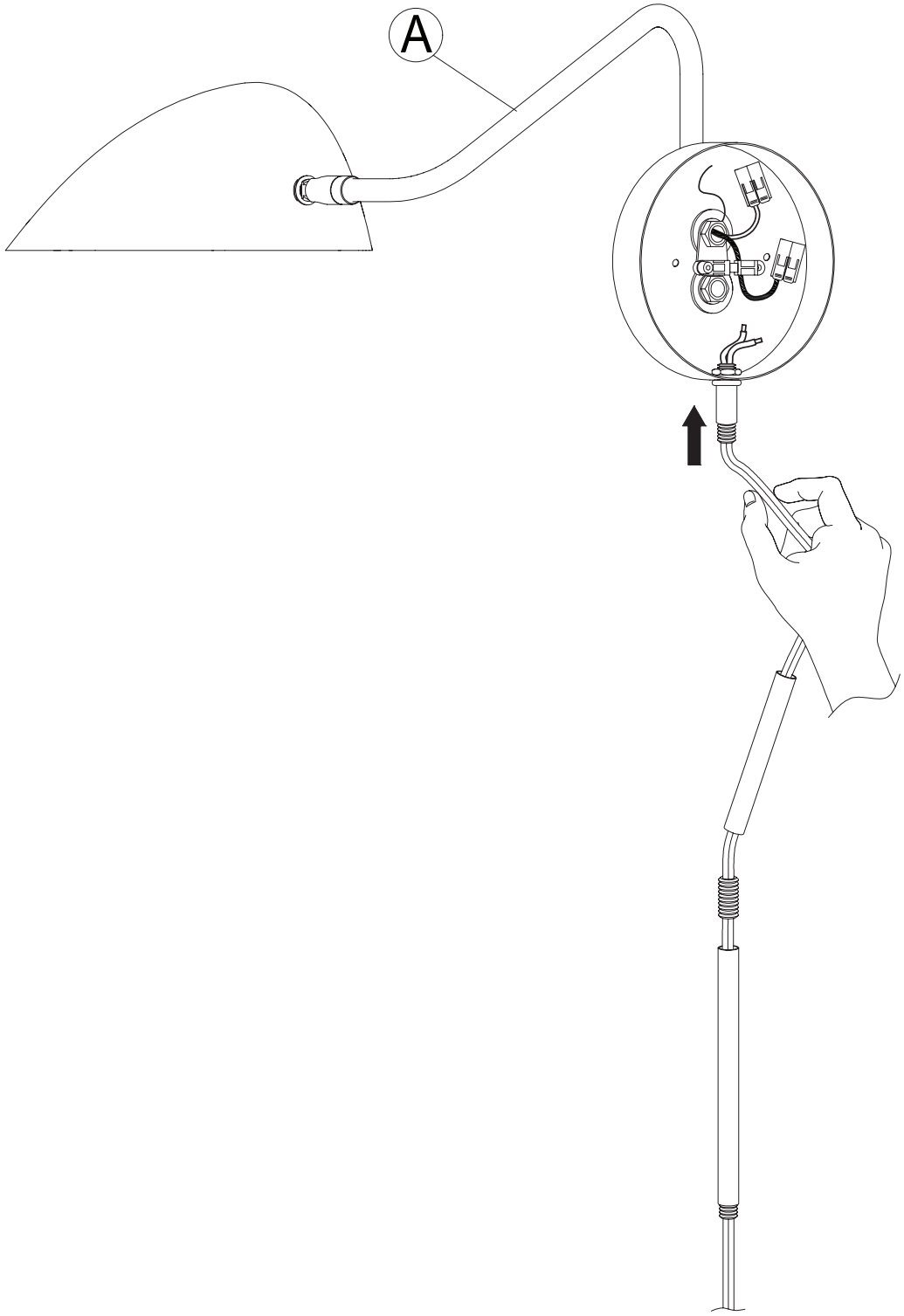

Step 6

Time to re-tie a knot and secure those wires like a pro! Inside the electrical compartment, create a knot that will hold the wires securely in place.

Leave about 70 mm of wire between the ends and the knot. This will help ensure that you'll have enough space to reconnect the wires to their initial spots under the flaps.

It's all about keeping things organized and making sure your wires feel right at home!

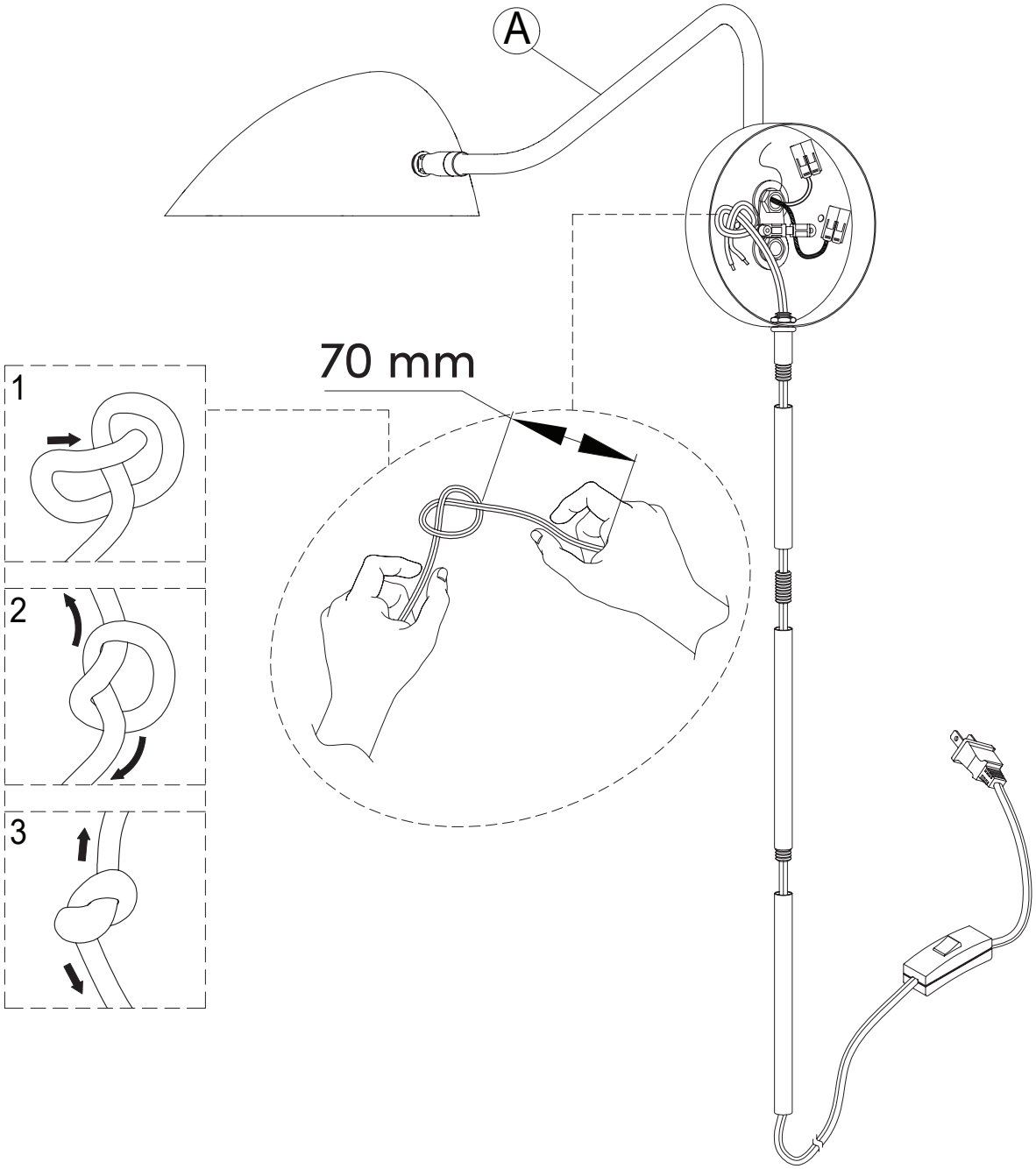

Step 7

To proceed, insert the black neutral
wire into the connector with the white wire.
Then, insert the black hot wire labeled “L” into the connector
with the black wire.

Finally, close the flaps on the wire connectors to
secure the wires in their place and insert the screw
back into the plastic bracket, as shown below.

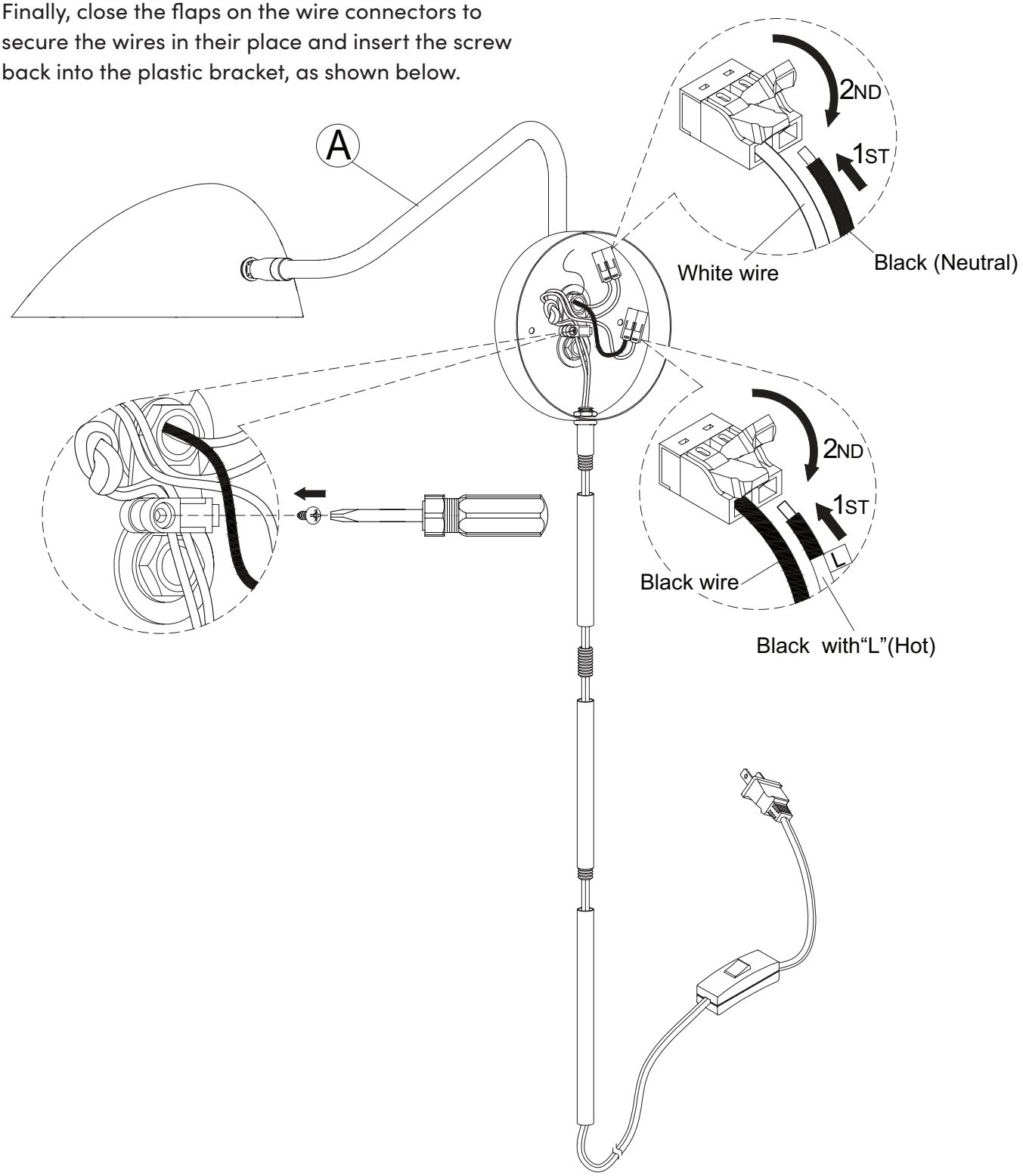

Step 8

Now, it's time to bring all the stems together in perfect harmony!

Hold onto the first tube that's already connected and get ready to attach the second one. Carefully rotate the second stem, turning it clockwise onto the first one, just like fitting puzzle pieces together.

Repeat this process for the rest of the tubes, linking them in the same way.

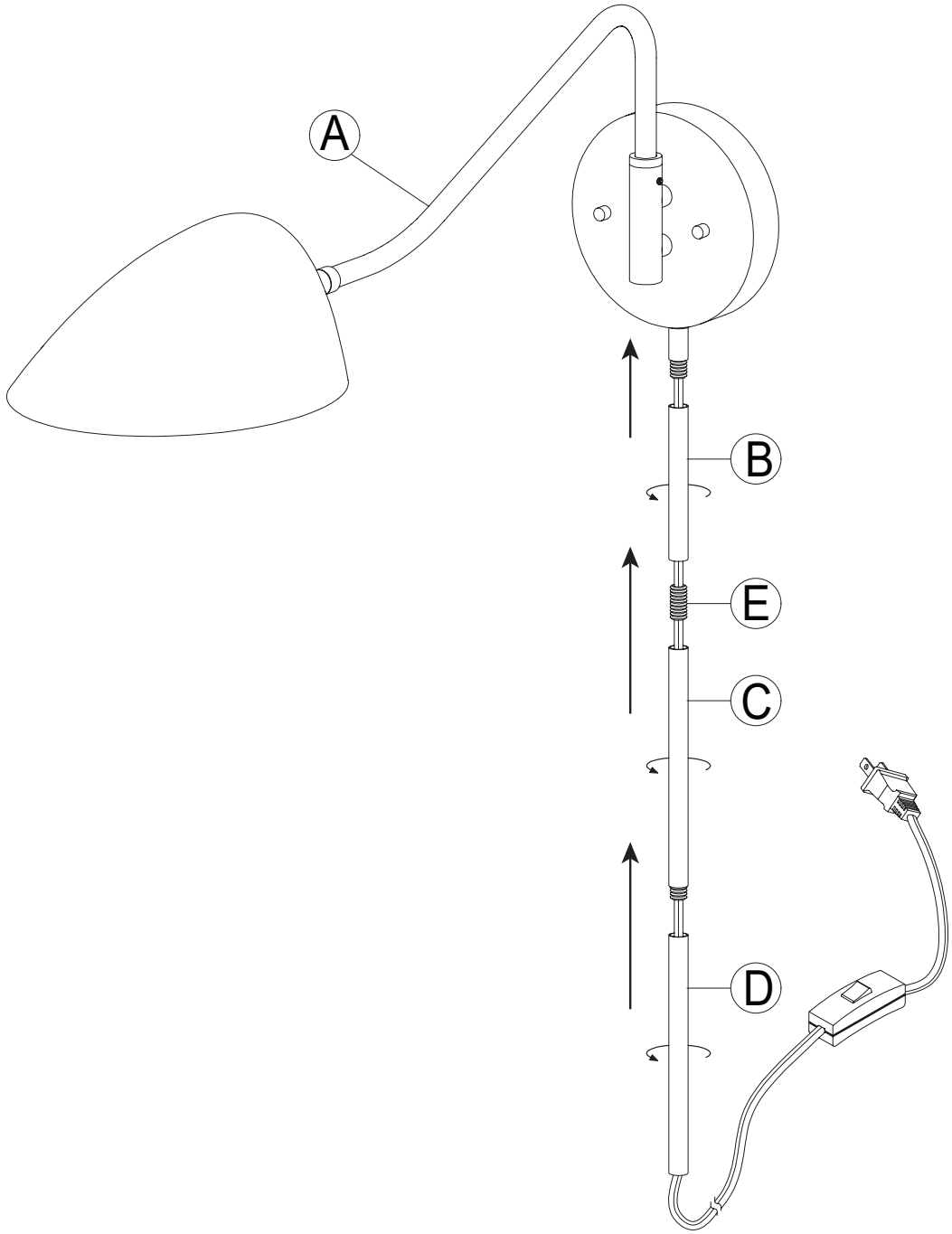

Step 9

Using the Mounting Plate (H) as a guide, use a level and pencil to mark within the keyholes where you want it on the wall.

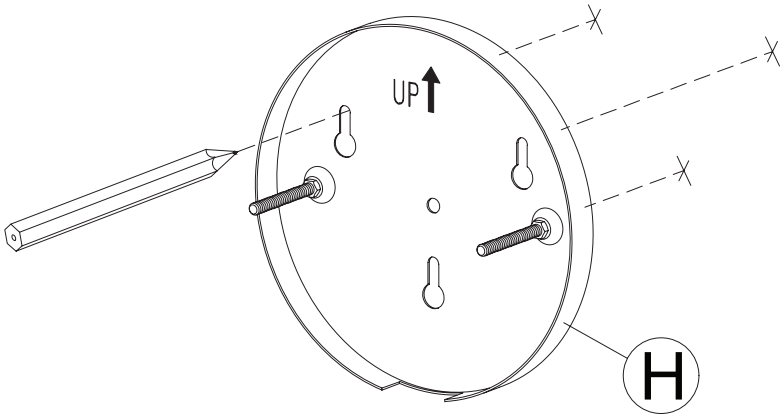

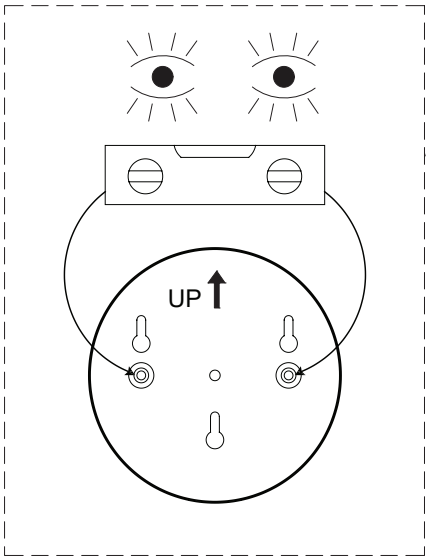

Step 10

Using a drill, the proper drill bit, and the reference marks from the previous step, drill 3 holes into the wall.

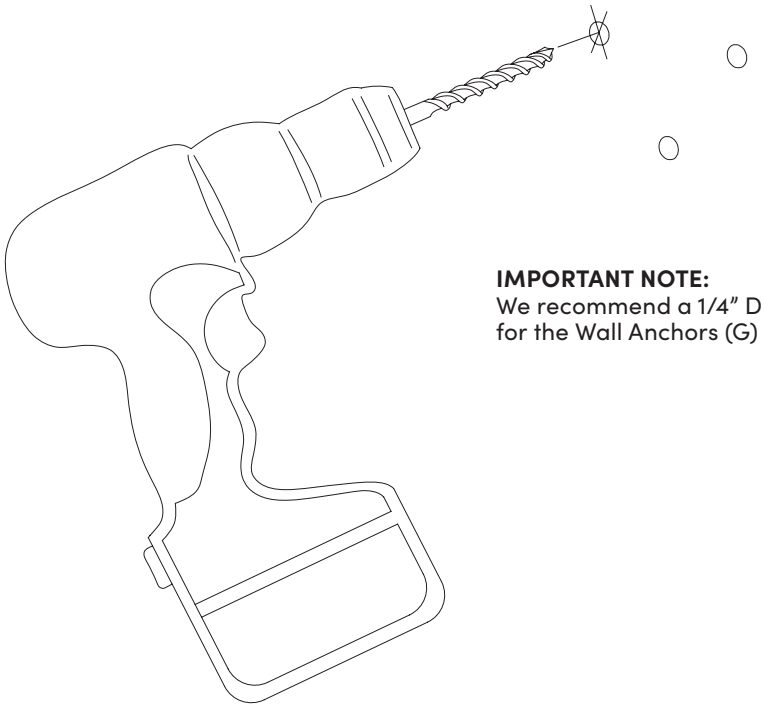

IMPORTANT NOTE:
We recommend a 1/4" Drill bit for the Wall Anchors (G) that we provided.

Step 11

Tap the Wall Anchors (G)
into place in the new holes you
just drilled.
You may be able to push them
into place with your thumb, otherwise
we recommend a rubber mallet.

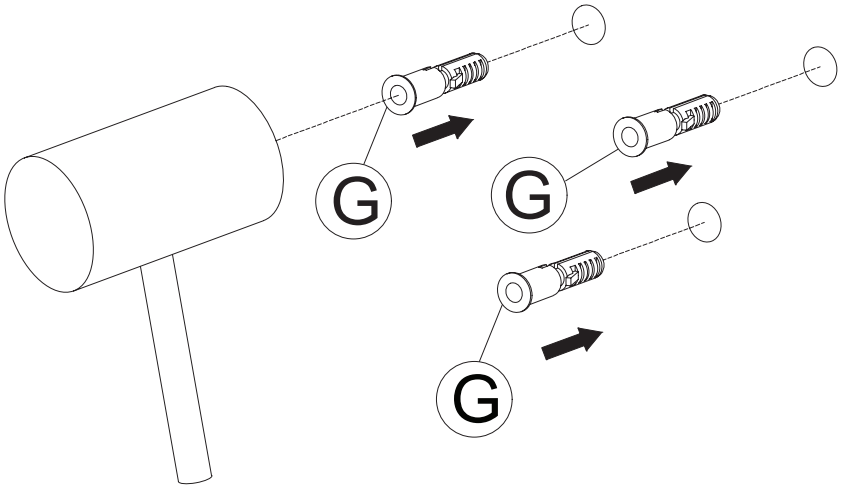

Step 12

Use the M3.5 x 35mm Screws (F)
to secure the Mounting Plate (H)
to the wall.

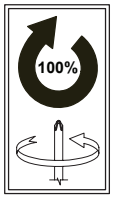

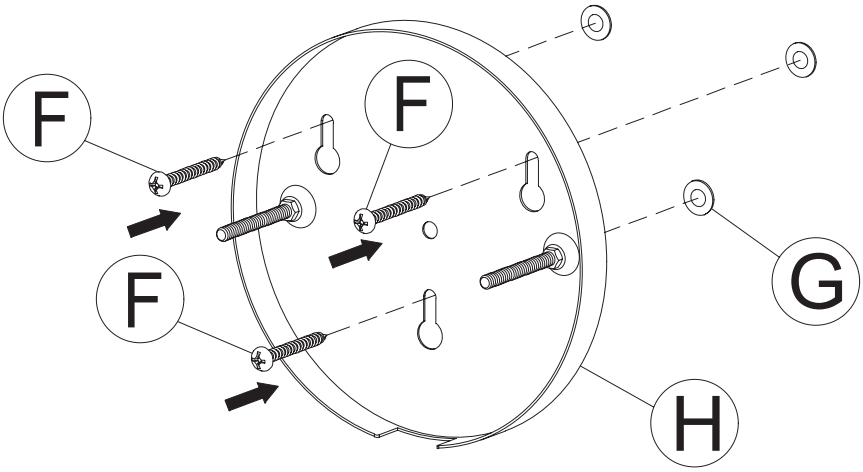

Step 13

Align the holes in the Fixture (A) over the top of the exposed screws on the Mounting Plate (H) before finally securing them together using the Finial Nuts (I).

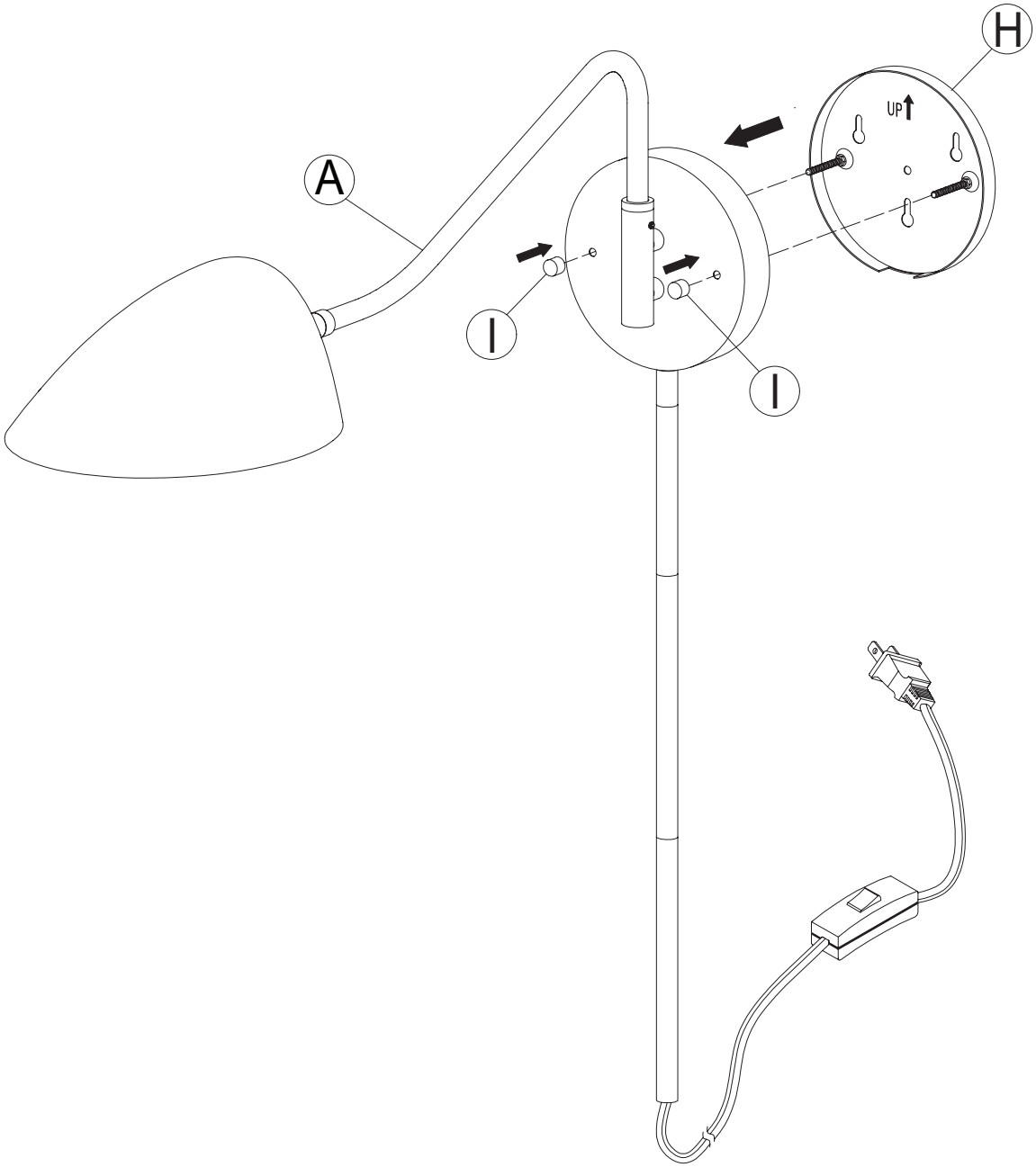

Step 14

Next, we need to install the bulb!
Insert the bulb of your choice
(we recommend a Type A19 bulb)
and let there be light!

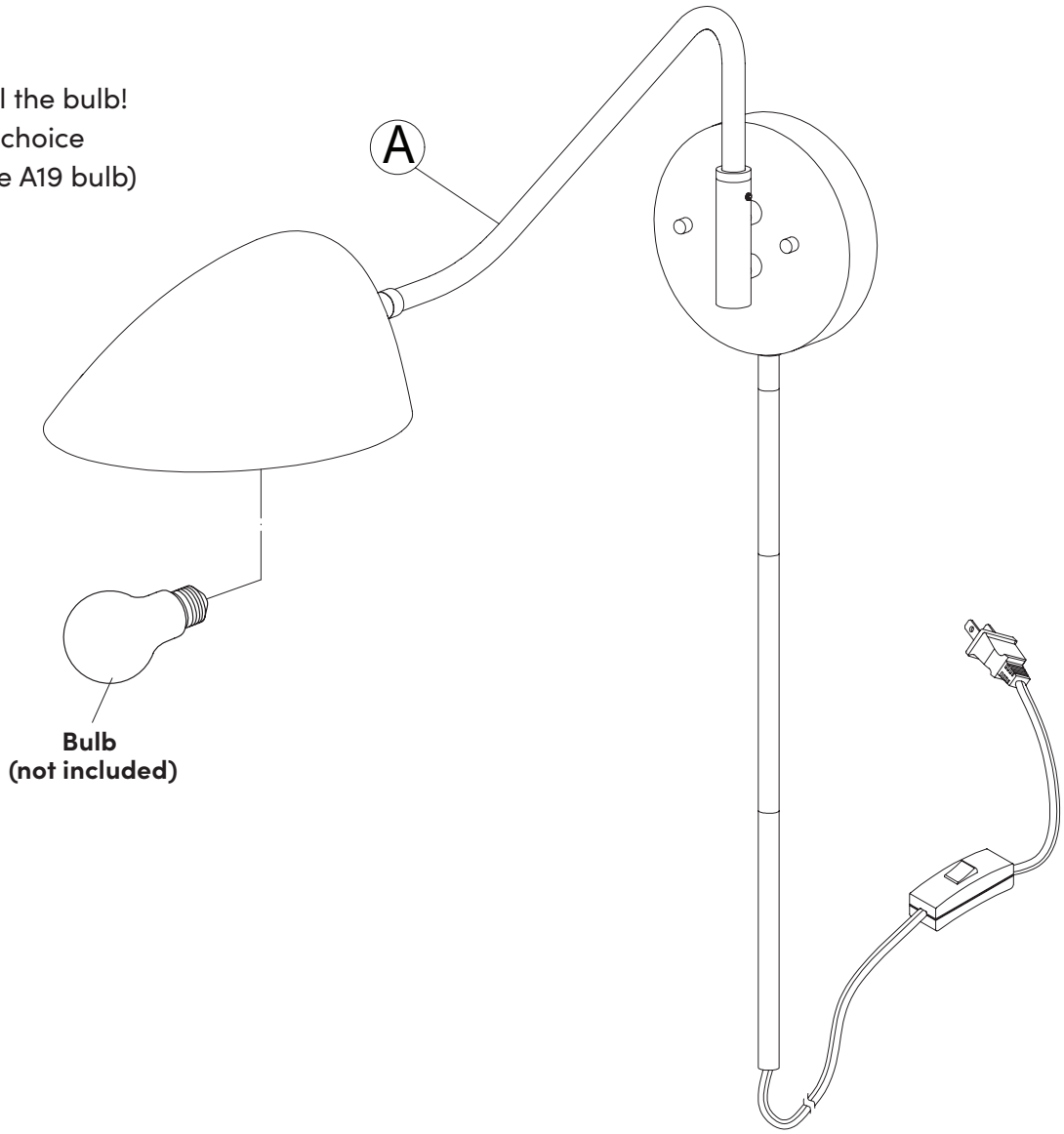

We recommend using 1 Type A19 light bulb. 120V 60Hz AC only.

Troubleshooting

Problem	Possible Causes	Solutions
The bulb will not light.	The bulb is burned out.	Replace the light bulb.
	The power is off.	Ensure the power supply is on.
	The circuit breaker is off.	Ensure the circuit breaker is in the ON position.
The fuse blows or circuit breaker trips when the light is turned on.	There is an exposed wire.	Discontinue use of the light. Contact a qualified electrician or reach out to our Customer Happiness team at help@nathanjames.com or 1-866-619-1004.

Step 15

Set the Fixture (A) to the desired orientation by adjusting the components with the Allen Key (N) at the set swivel points.

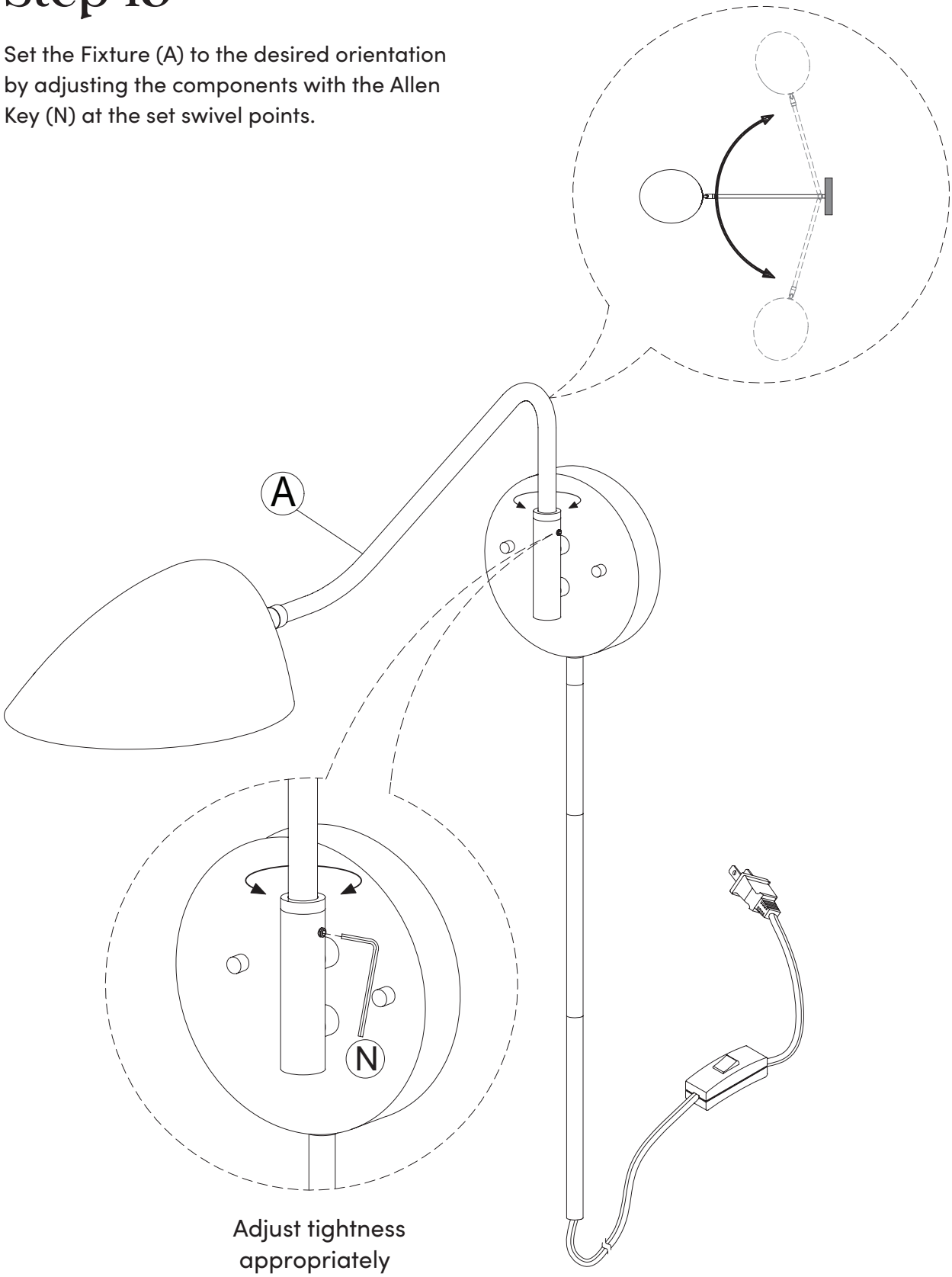

Adjust tightness appropriately

Step 16

Finally, you can adjust the Shade to face your desired direction, as shown in the reference image below.

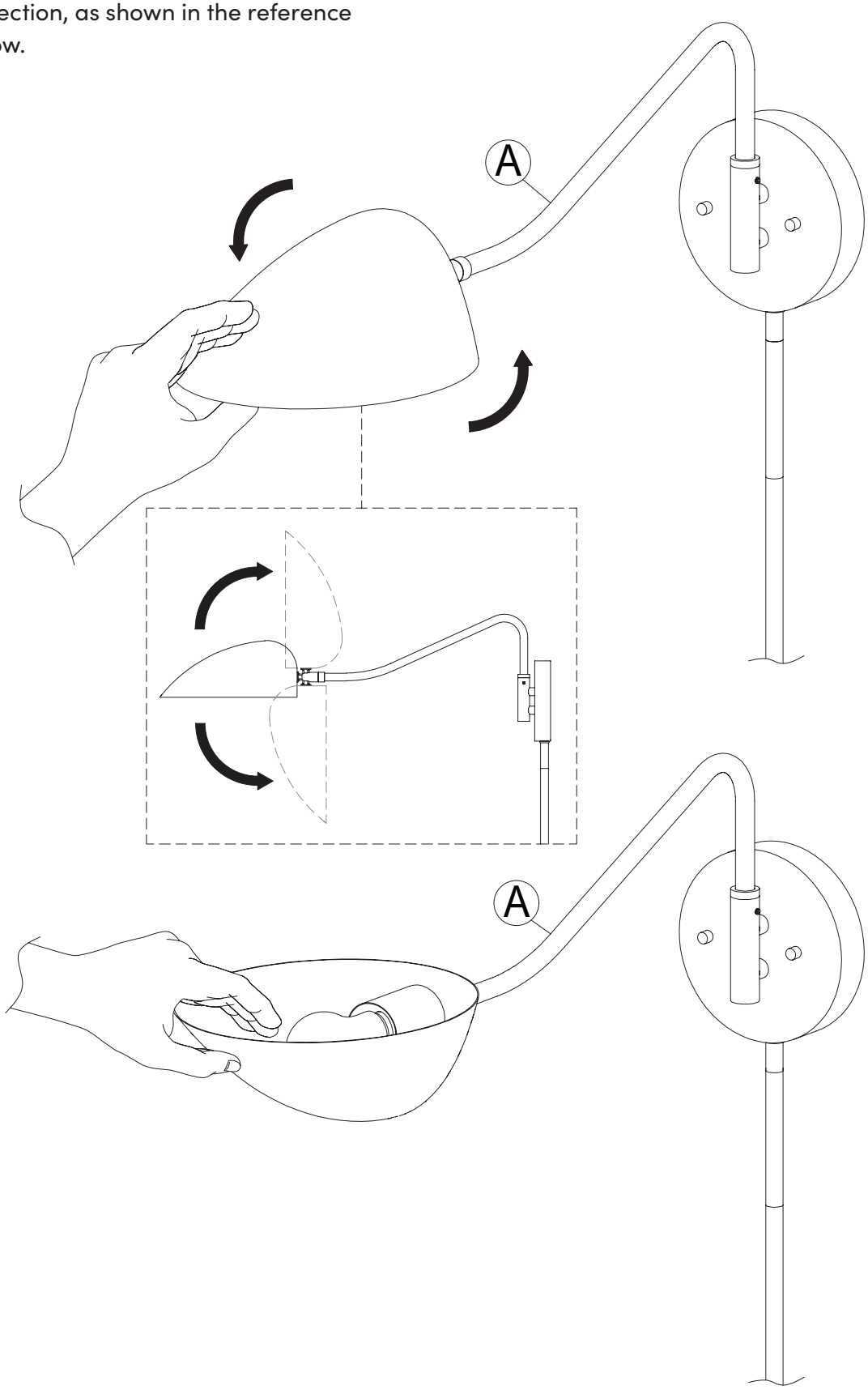

Hardwired option

The following steps 1–12 are intended for hardwire mounting to your existing electrical box. Skip back to page 5 for directions on how to mount this light on your wall as a plug-in light.

Step 1

It's as easy as it looks! Separate the Fixture (A) from the Mounting Plate (H) by removing the Finial Nuts (I).

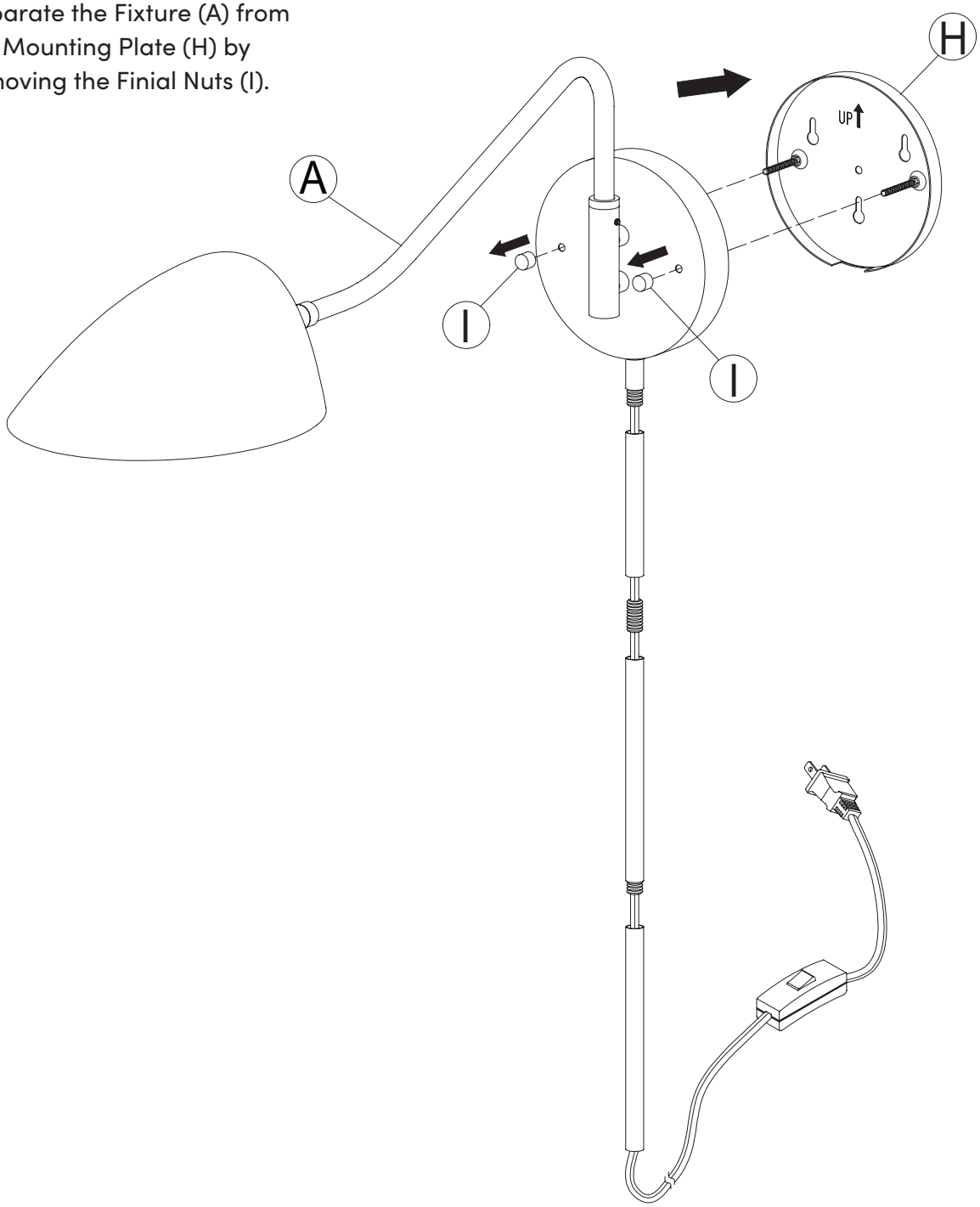

Step 2

Behold the wire compartment!

Carefully raise the flap on the wire connector to release the black.
Repeat this step on the second connector so that both black wires have been removed and the black + white wires remain attached to the Fixture (A).

Once the wires have been disconnected, remove the screw from the plastic bracket, as shown below, then untie the knot that has kept the two wires intertwined.

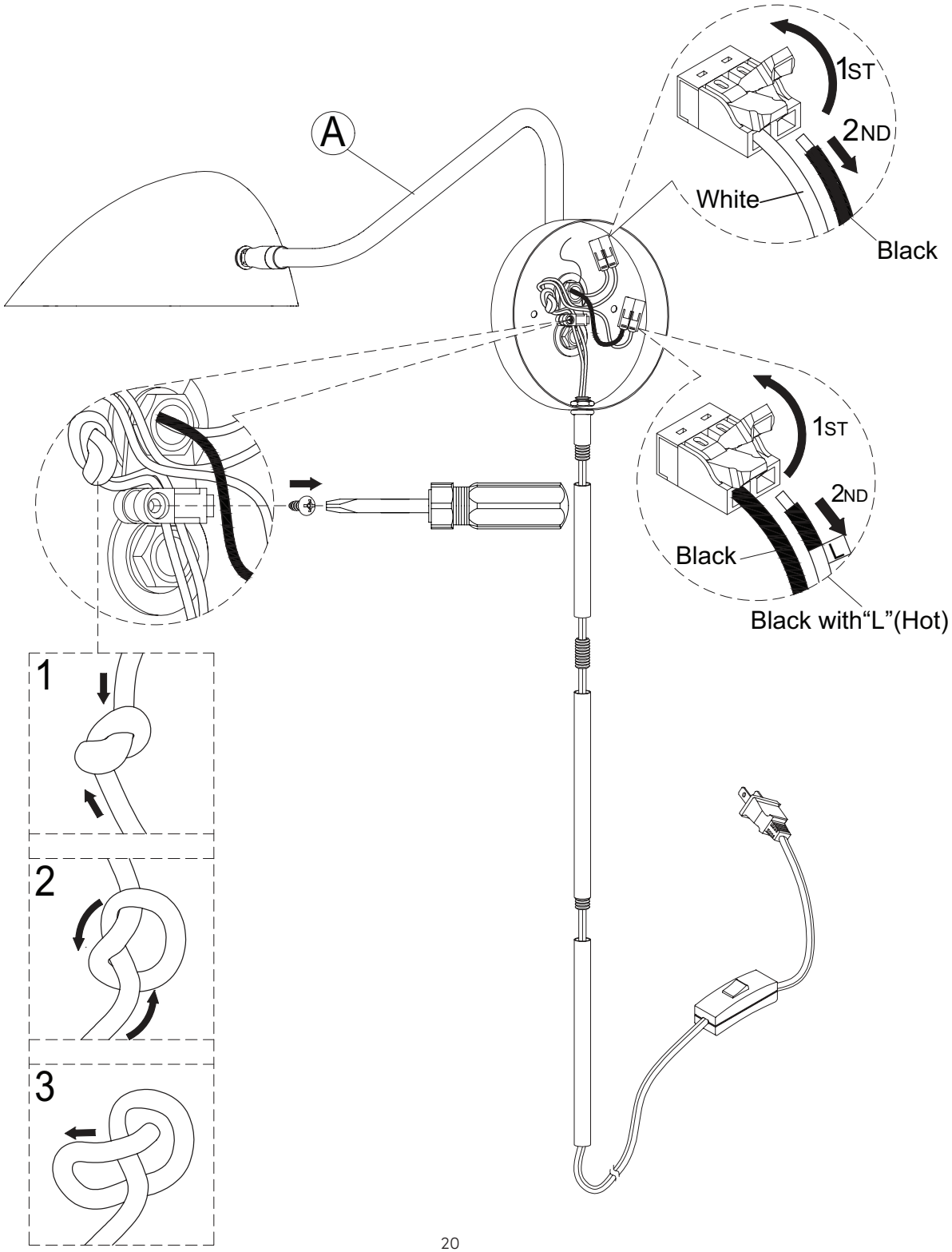

Step 3

Voila! With the knot untied, it's time to remove the wire for the time being. Carefully pull the cord through the bottom hole of the Fixture (A) by giving it a gentle tug to guide it all the way out.

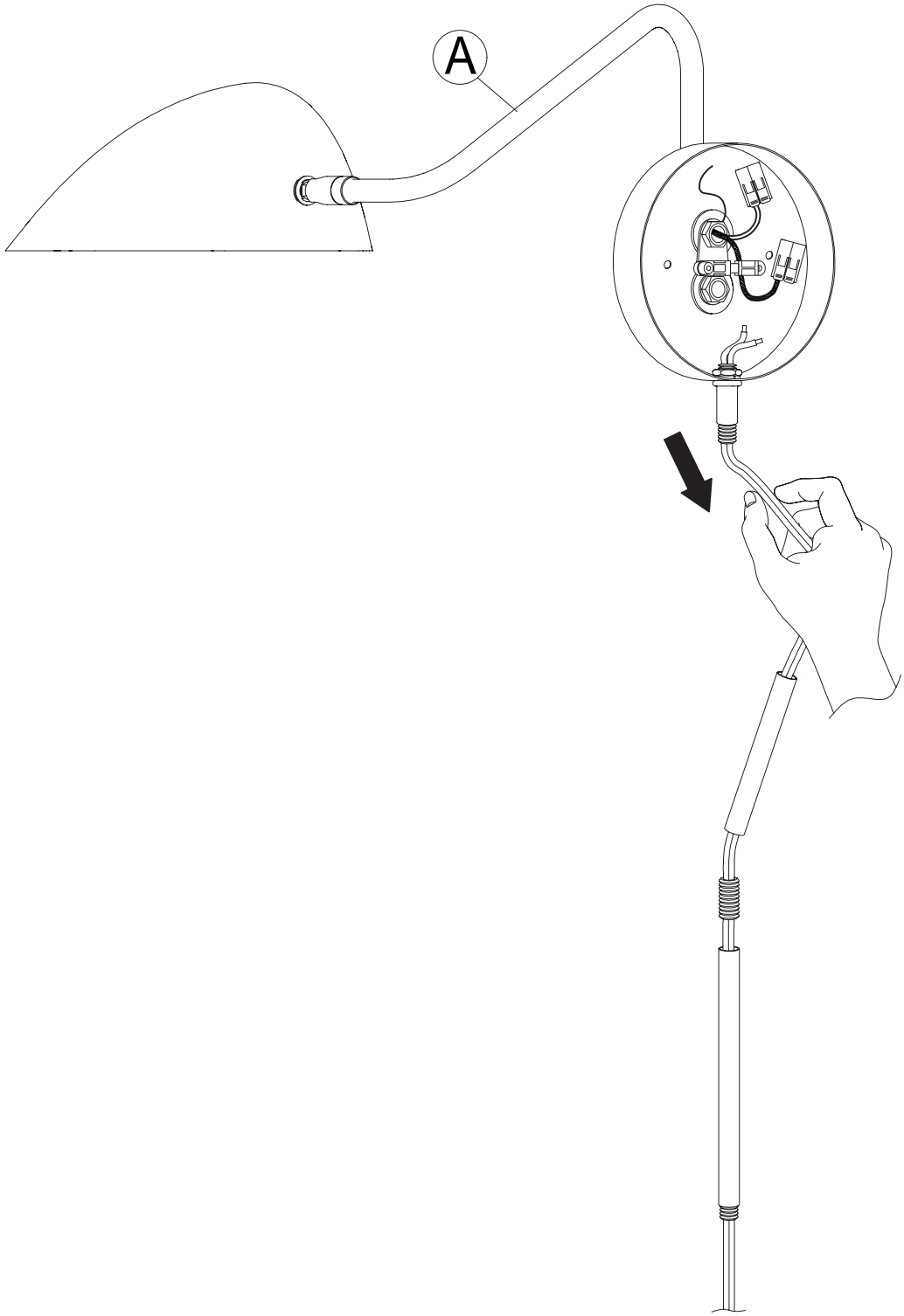

Step 4

Next, use the Wrench (O) to loosen and remove the Threaded Tube from the bottom of the backplate on the Fixture (A).

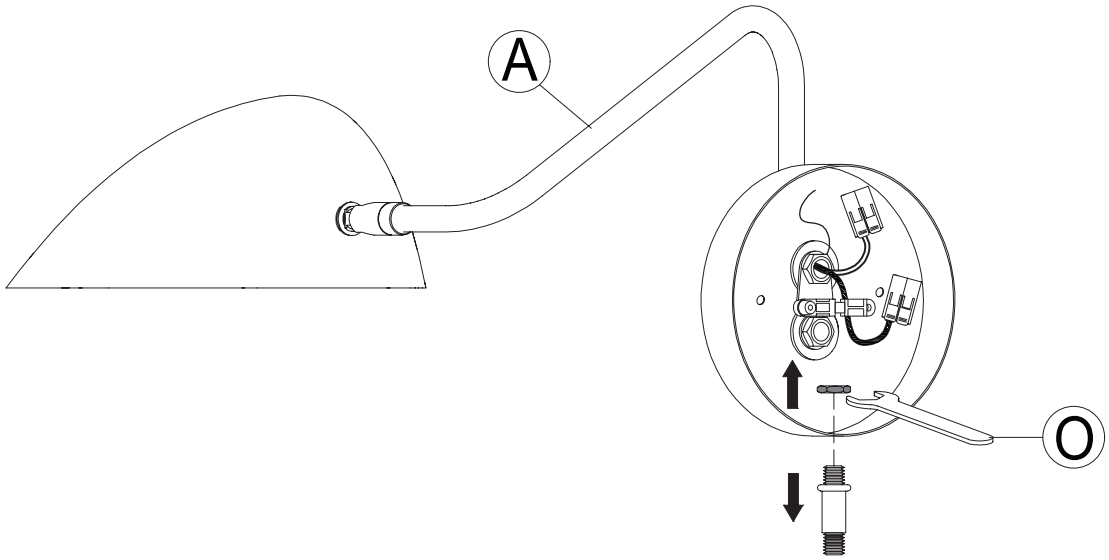

Step 5

Insert the Plastic Cap (K) into the bottom of the Fixture (A) to cap off the hole.

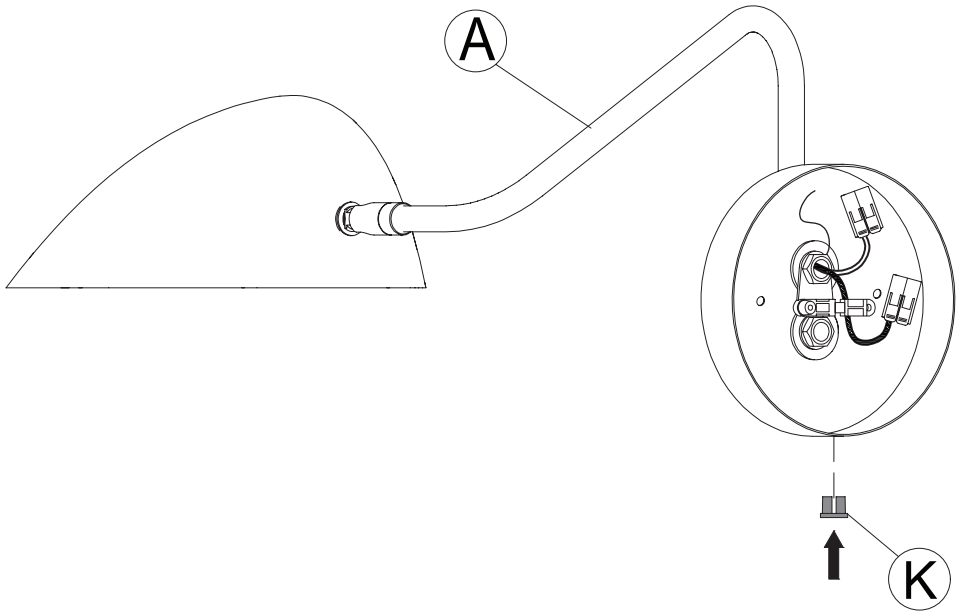

Step 6

Mount the Mounting Plate (L) to the electrical box using the Mounting Screws M4 x 26mm (J).

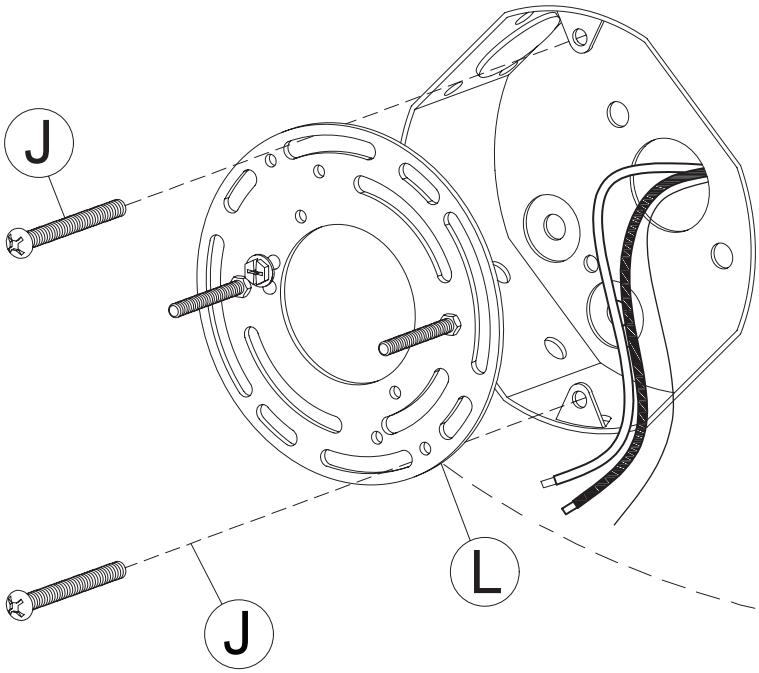

Note: Be sure that you are only making the connections to a 120V 60Hz AC circuit. If you do not have a pre-existing electrical box, we strongly advise using a certified electrician.

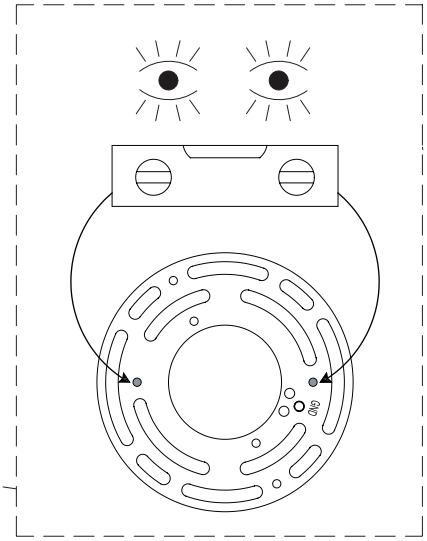

Step 7

First, wrap the ground wire from the Fixture (A) around the grounding screw on the Mounting Plate (L) and then secure it in place by tightening the grounding screw.

Next, use the Wire connector (M) to join the ground wires from the Fixture (A) and from the electrical box.

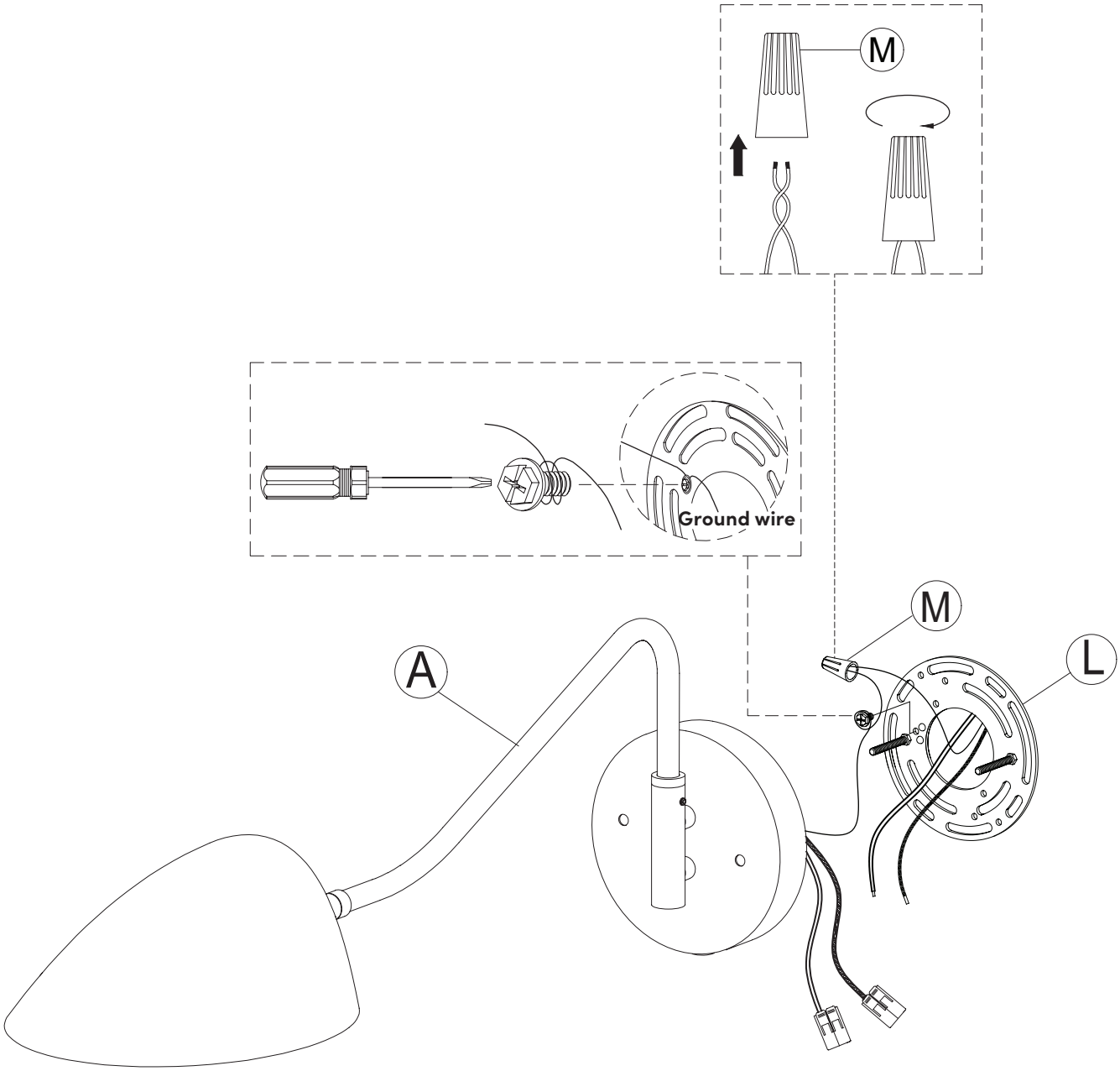

Step 8

Next, insert the white (neutral)
wire into the connector with the white wire.
Then, place the black hot wire into the connector
with the black wire.

Finally, close the flaps on the wire connectors to
secure the wires in their place.

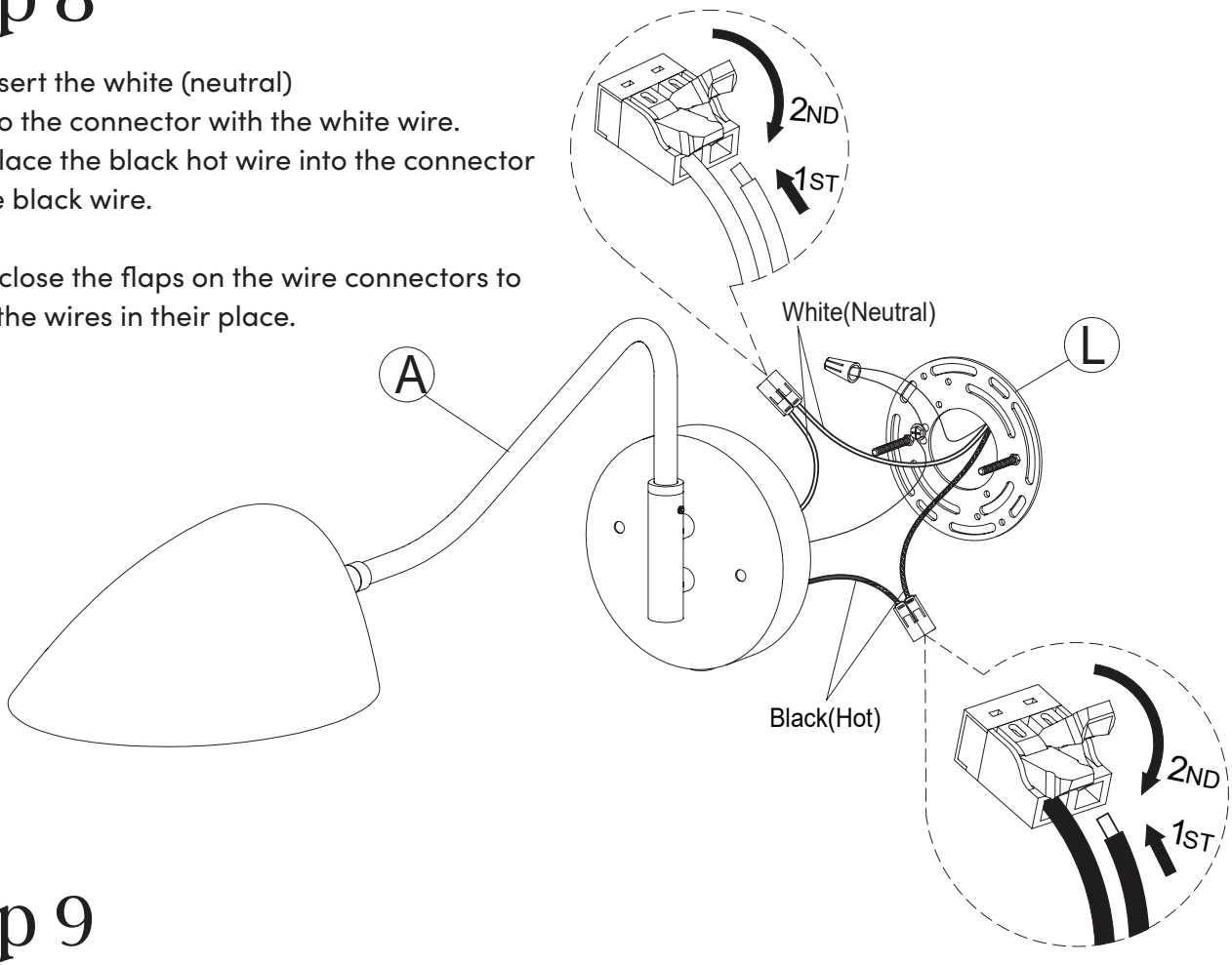

Step 9

Secure the Fixture (A) to the Mounting Plate (L) using the Finial Nuts (I).

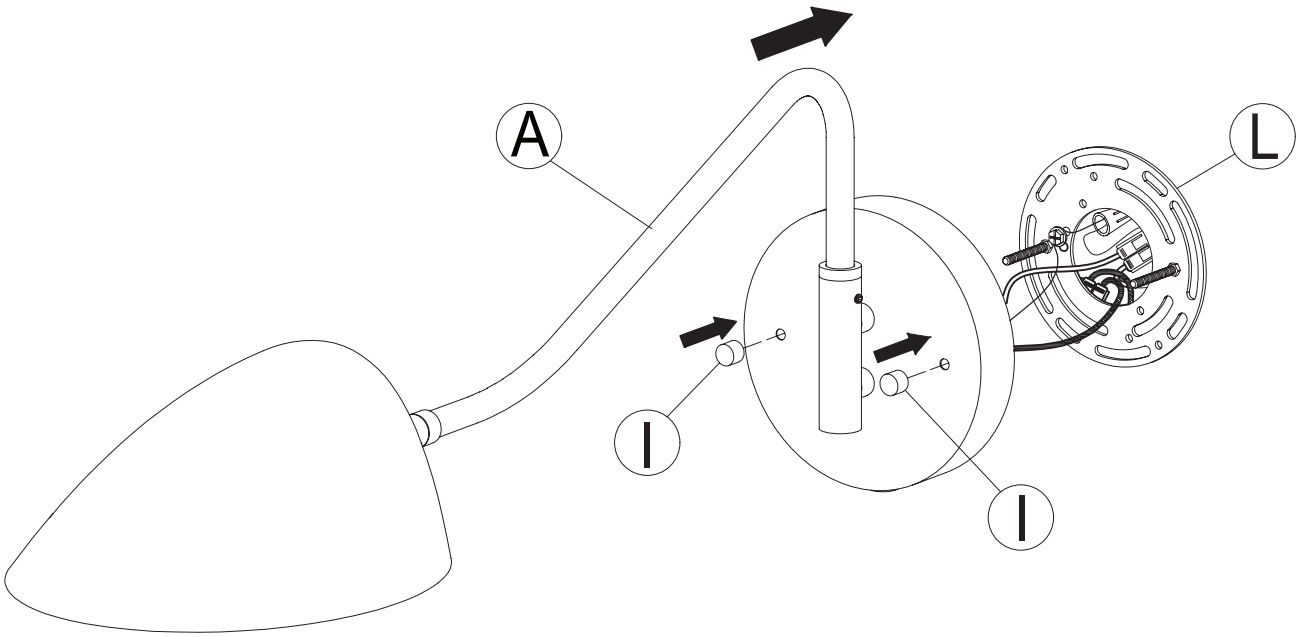

Step 10

Next, we need to install the bulb!
Insert the bulb of your choice
(we recommend a Type A19 bulb)
and let there be light!

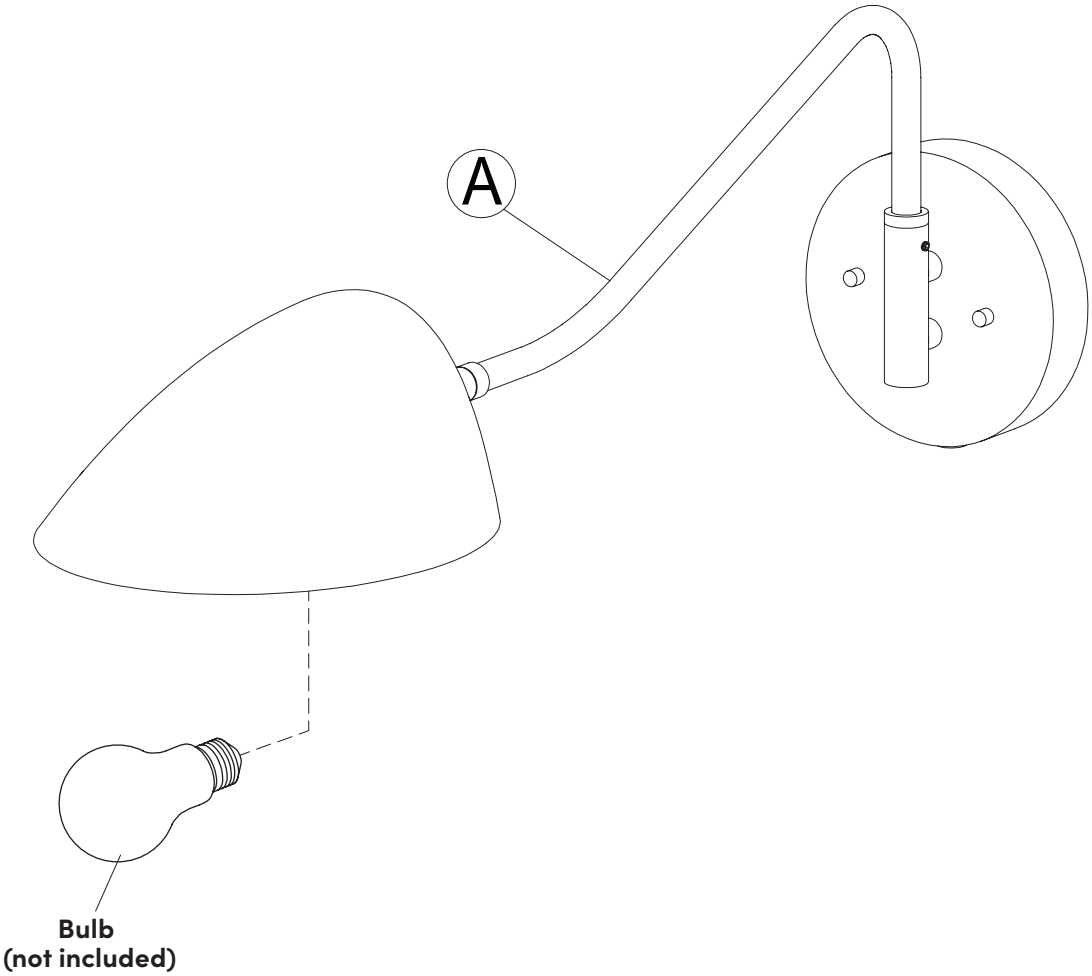

We recommend using 1 Type A19 light bulb. 120V 60Hz AC only.

Step 11

Set the Fixture (A) to the desired orientation by adjusting the components with the Allen Key (N) at the set swivel points.

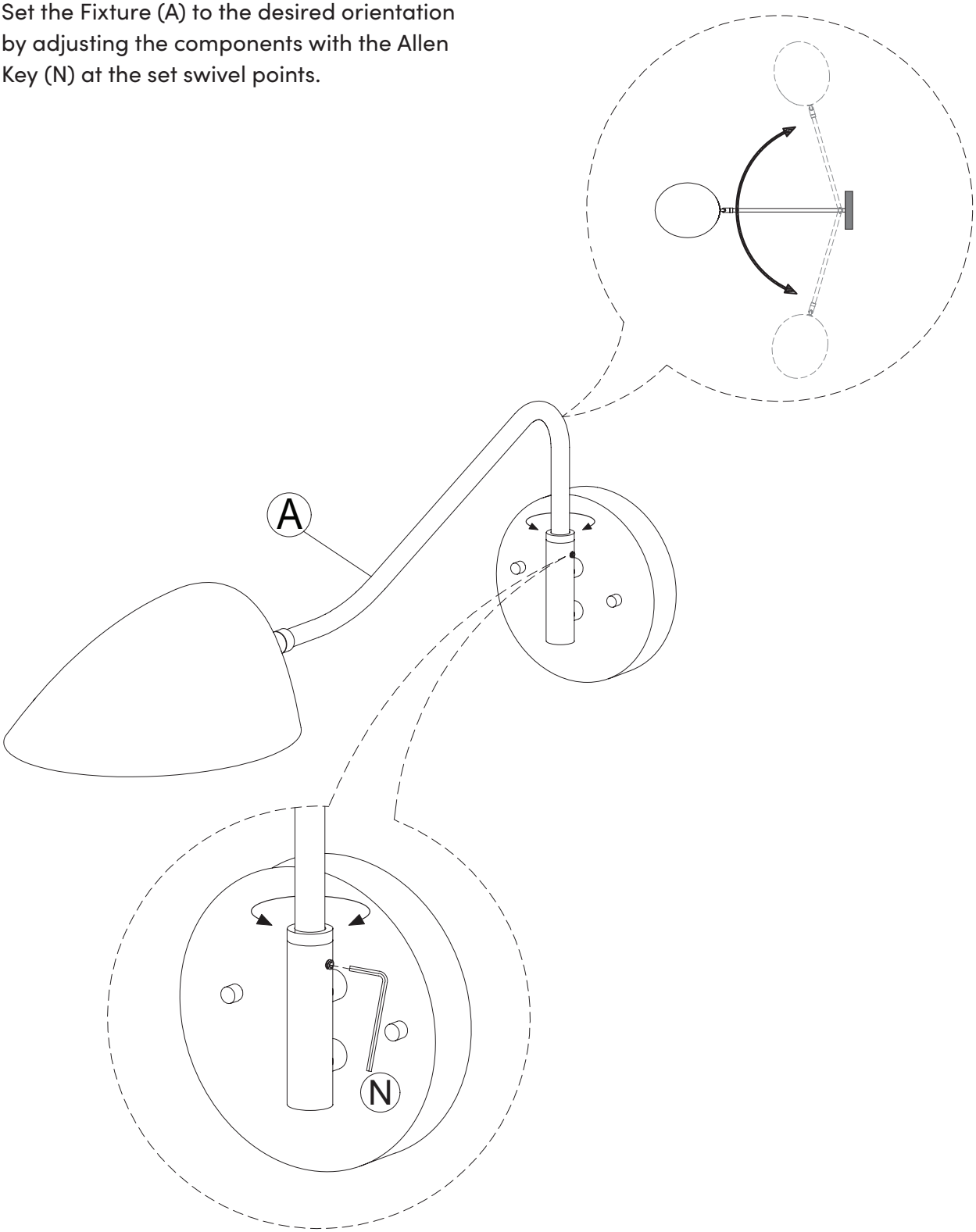

Adjust tightness appropriately

Step 12

Finally, you can adjust the Shade to face your desired directions, as shown in the reference image below.

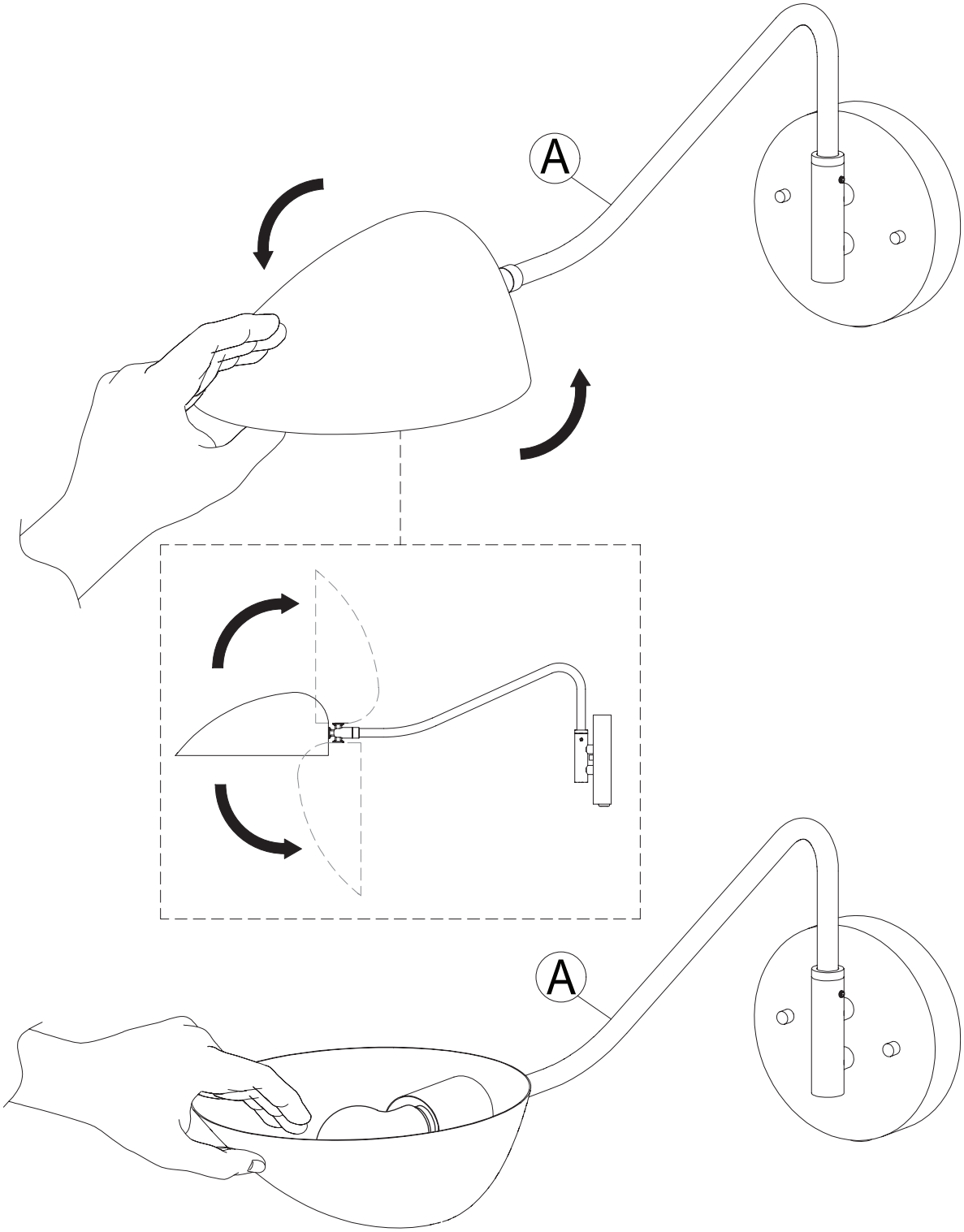

Questions? Don't worry, we've got the answers

What other light bulbs can fit in this light?

The bulb must not be greater than the max wattage for the fixture. It must match the base size, and the diameter of any area of the bulb should be less than diameter of any area of shade, so that it can fit.

Can I use an LED light bulb?

Yes, as long as the base size matches and the diameter of any area of bulb is less than diameter of any area of shade, so that it can fit.

Is this UL/ETL certified?

Yes, all our products are either UL or ETL.

Do I need an electrician to set up the hardwire?

We recommend using a certified electrician for all hardwiring, although all of our fixtures can be set up without an electrician, as long as you are replacing an existing fixture or have an existing junction box ready for a fixture installation. ENSURE POWER IS OFF WHEN INSTALLING. For all new constructions, please use a certified electrician.

Can I retrofit this hard-wired to a plug-in or vice-versa?

Yes, a plug-in fixture can be turned into a hardwire fixture and a hardwire fixture can become a plug-in fixture. For many products we will provide all the necessary hardware to make these changes, if not, you will need to purchase the necessary hardware.

Is this light compatible outside North America?

Our lighting is only warranted in Canada and the United States.

What do I do if the product is not working?

Try a different light bulb and confirm proper installation.

Can these lights work on a dimmer?

Dimmability is related to the light bulb and the wall switch, not the light fixture. All our hardwire fixtures are compatible with dimmable light bulbs. We recommend using a dimmer switch, as it extends the life of the bulb and allows for energy saving and great ambiance. If using a LED bulb, please ensure both your LED bulb and dimmer switch are compatible.

Can I use the fixture outdoors?

No, this product was not designed to be used outdoors.

No heartburn, when we handle the return

Give us a call **1-866-619-1004** or shoot us a message at **help@nathanjames.com** we will issue you a free replacement with **zero hassle**.

Our way

- Give us a call
- Replacement
- You

Their way

- Re-package item
- Schedule pick up
- Track package
- Replacement
- You

We really don't want you to go through the hassle of re-packaging your item and sending it back, because let's be honest...nobody has time for that.

We are only in business if you're happy

For starters, thanks for being you.

Toll-free at 1-866-619-1004
Help@nathanjames.com
NathanJames.com/help

We do our best to ensure your product arrives without any problems, but occasionally mistakes happen—as humans we are imperfect beings. In the event that a part is damaged or missing, we will be more than happy to provide you with replacement part(s) for free.

Lifetime Guarantee

We believe in making things that last. That's why every product is backed by our Lifetime Guarantee. No hidden clauses. No runaround. If it breaks, we'll replace it—plain and simple. This isn't just a promise—it's our commitment to quality, and to you.

This product comes with a Lifetime Guarantee from the date of purchase. Please use your phone to scan the QR code on the cover of this booklet to register your product or visit **https://goo.gl/i9dk3q**

Did we do alright? Please spread the love!

If you are happy with your product, tell your friends and family about us, or even better, leave us a review online. Spreading the word gives us the opportunity to make more people happy and keep our prices low for your next purchase.

Brooke Burdon

Founder, Nathan James