KINGSTON

TO ORDER PARTS, CALL: 1-877-252-7277
www.kingstonbrass.com

KBX4630,1,2,3,6,7,8HL

Single Handle Pressure Balanced Tub & Shower Faucet

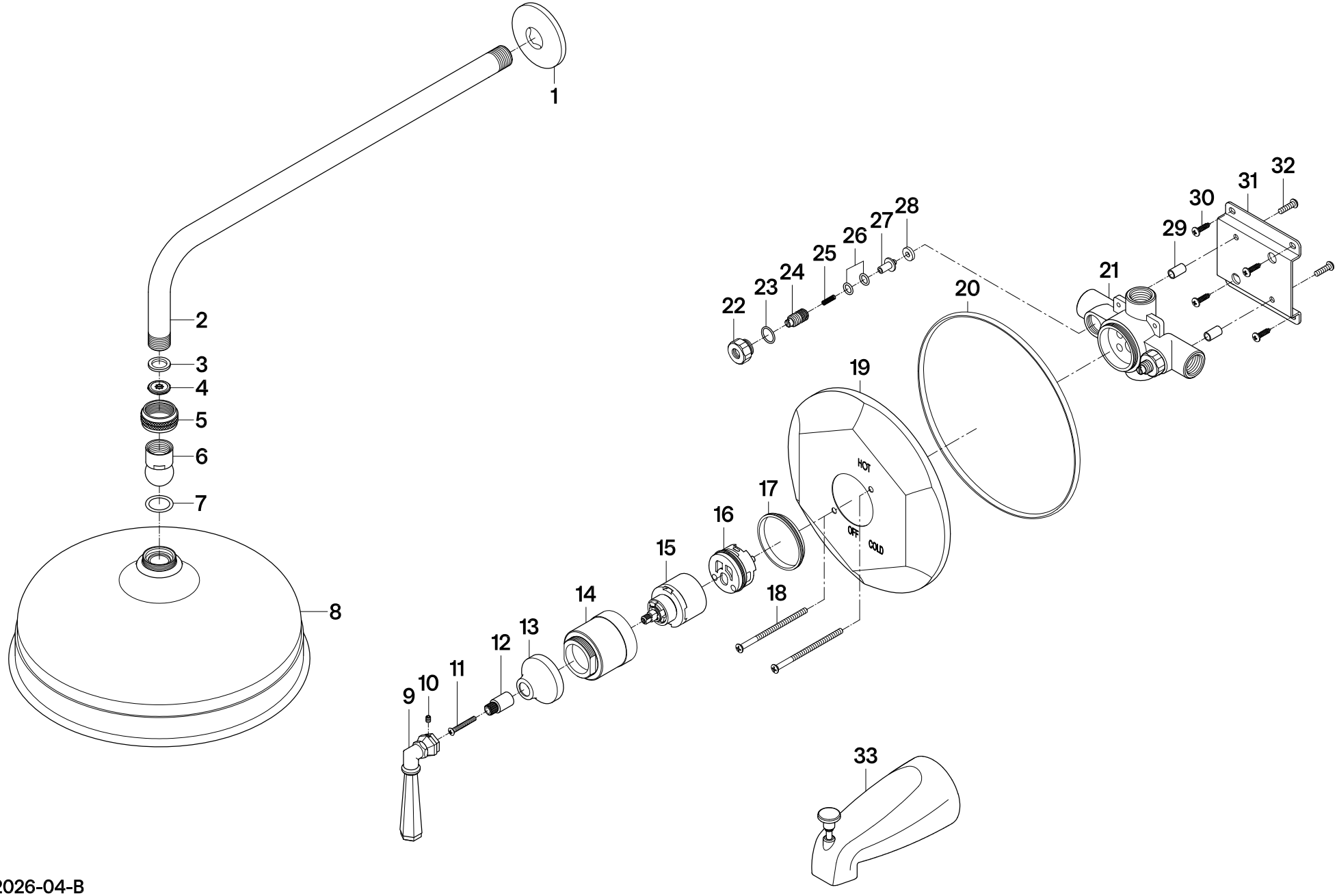

2026-04-B