Panel bed
Assembly Instructions

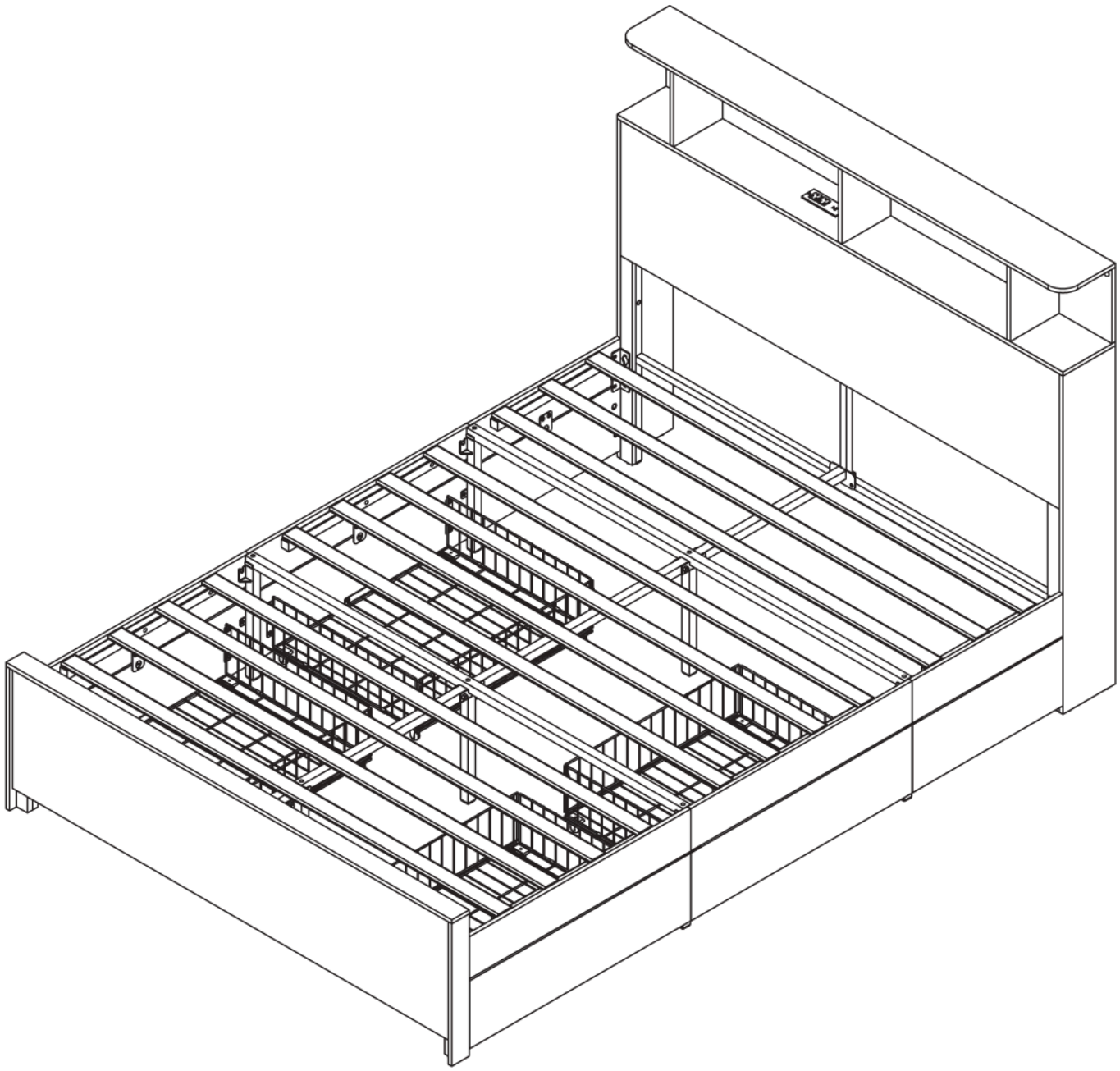

Dear Customers,

Thank you for purchasing our product. Please read this instruction manual carefully after receiving this product. It will help you assemble this product quickly, safely and correctly. You can keep this manual for future reference.

MADE IN CHINA

IMPORTANT

Please follow the instruction manuals and use a pad to protect the product during your assembly.

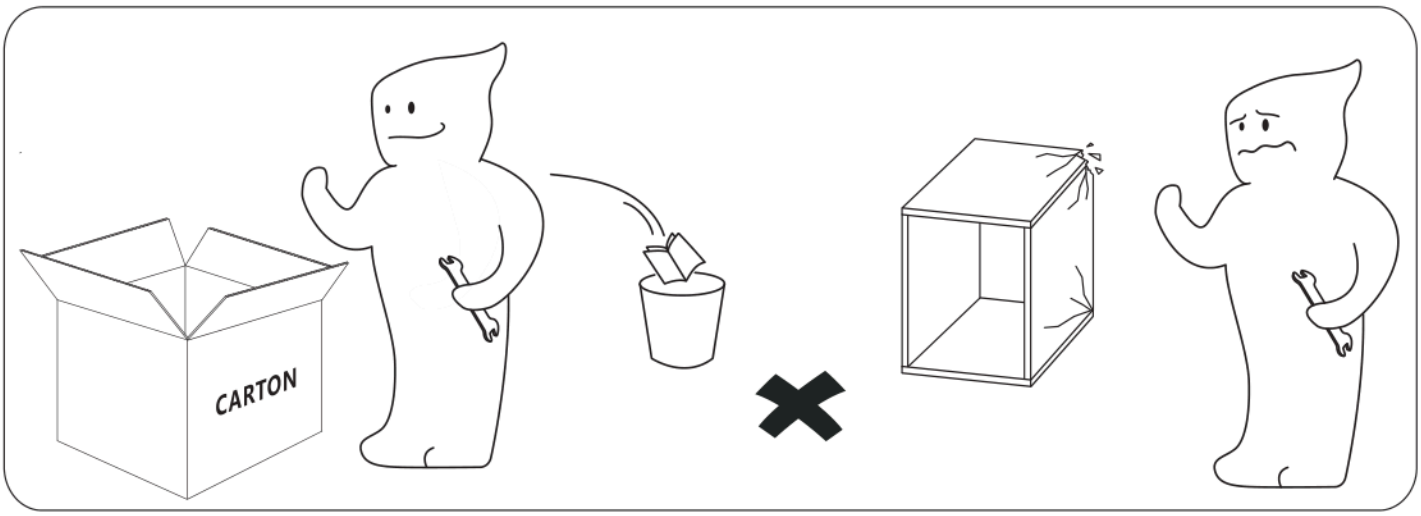

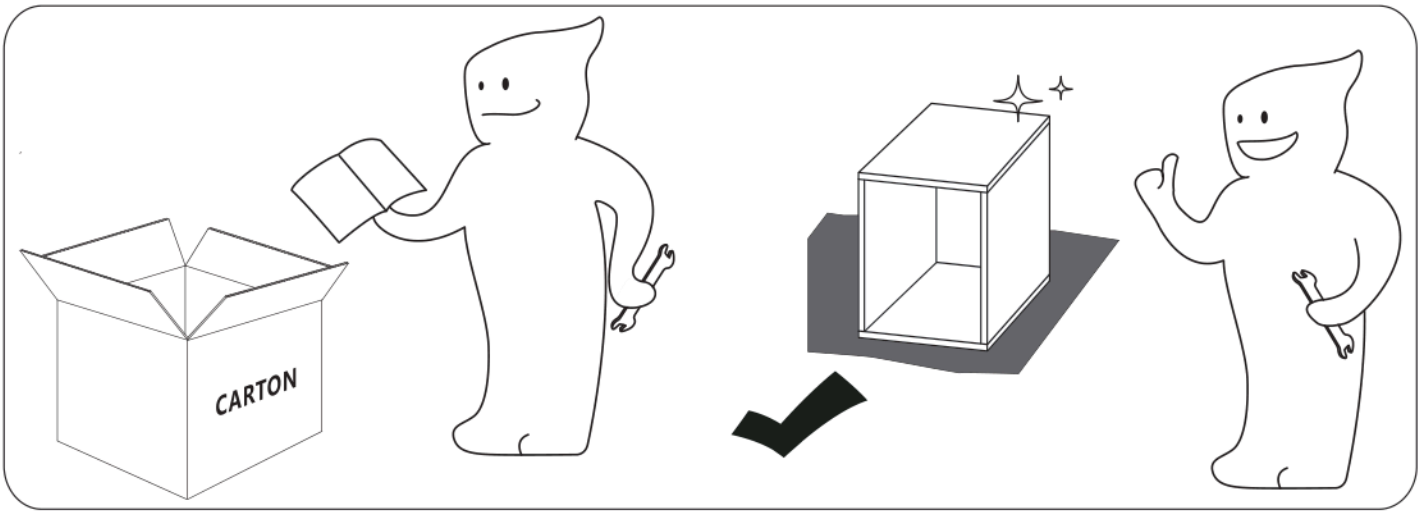

Note:
1. Should be assembled on flat ground to keep balance.
2. Before completing the installation, do not tighten the screws.

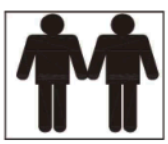

For easier and better assembly, **2** or more adults are required.

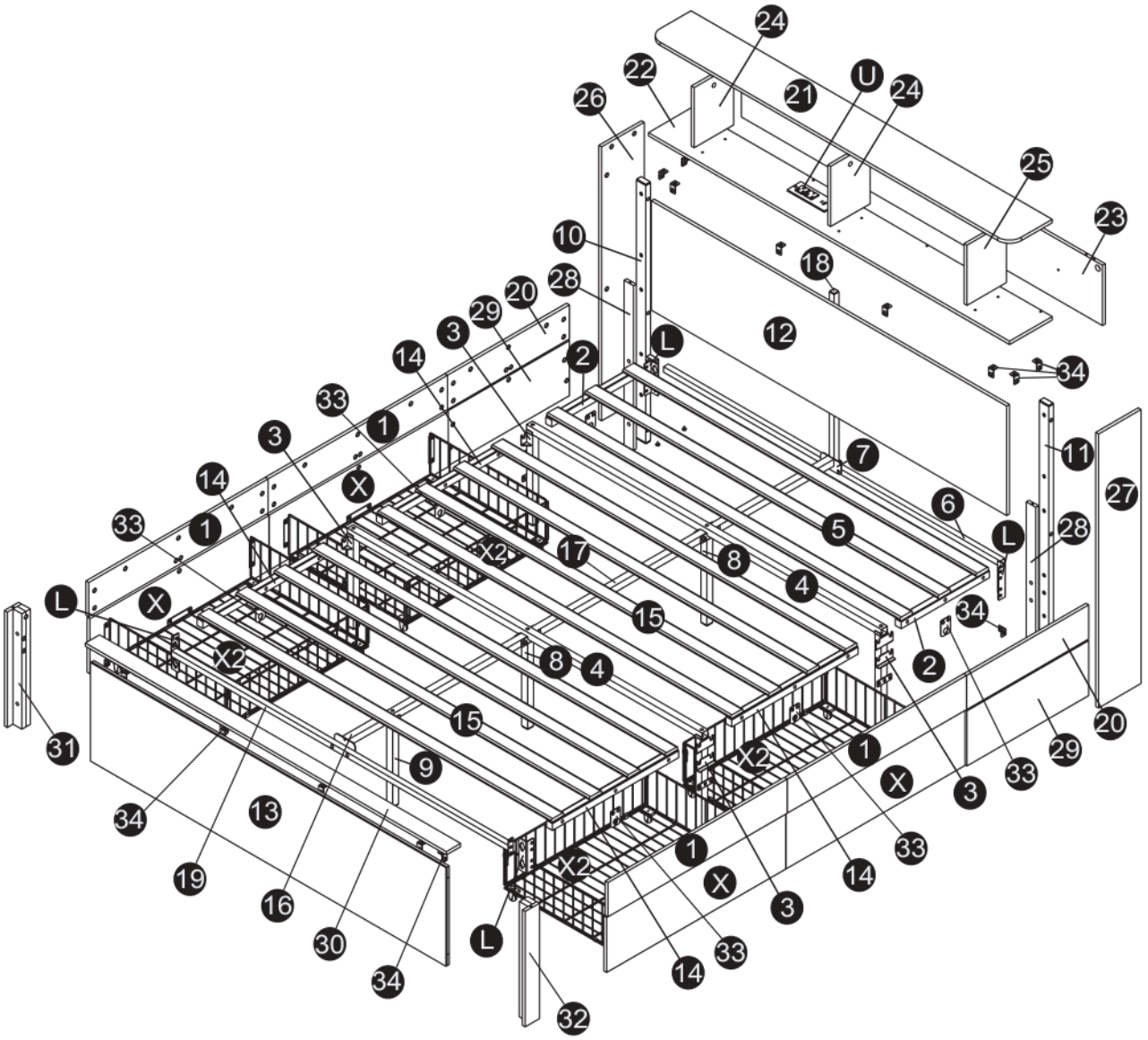
24
22
21
U
24
26
25
23
10
18
28
20
29
3
12
L
14
2
34
33
1
3
7
11
14
X
6
27
33
1
5
L
28
X2
17
8
4
L
X
15
34
X2
8
4
2
15
20
31
9
X2
1
29
X
3
33
34
13
1
33
19
X2
X
14
16
3
30
L
33
34
14
32

PARTS LIST

1 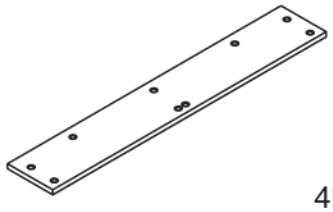 4PCS	2 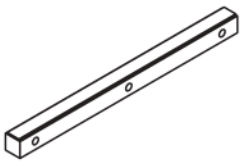 2PCS	3 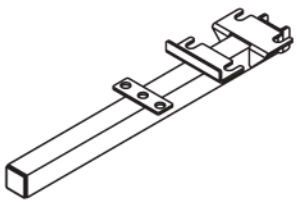 4PCS
4 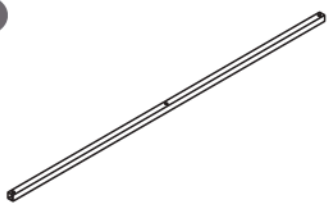 2PCS	5 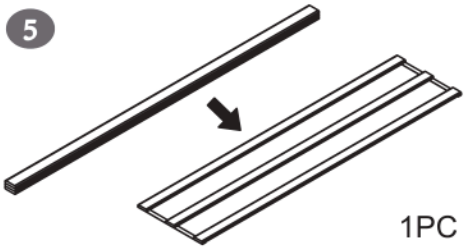 1PC	6 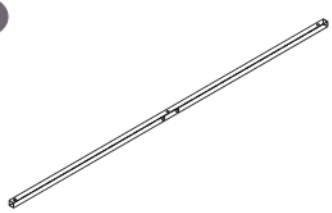 1PC
7 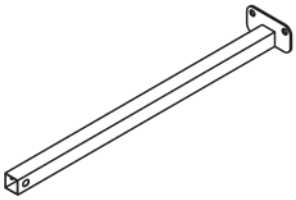 1PC	8 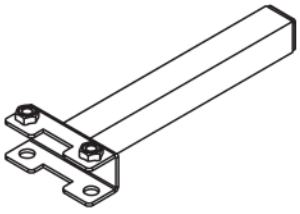 2PCS	9 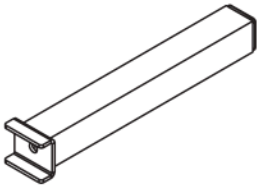 1PC
10 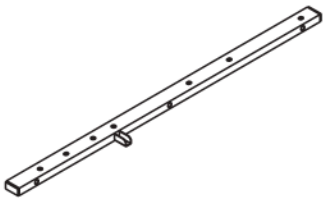 1PC	11 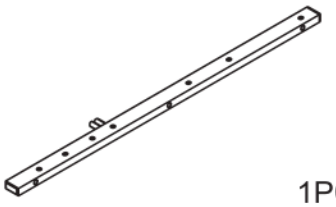 1PC	12 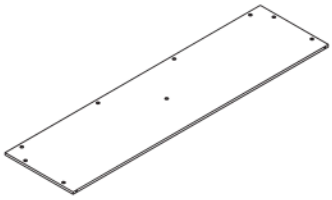 1PC
13 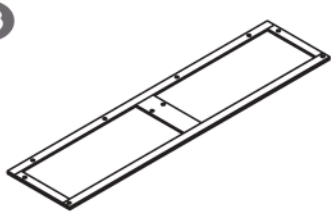 1PC	14 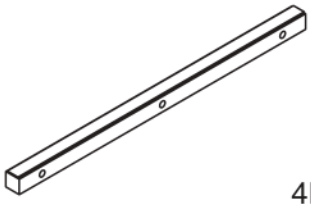 4PCS	15 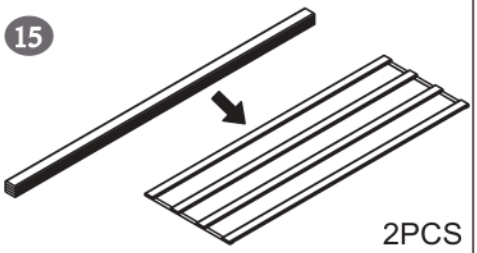 2PCS
16 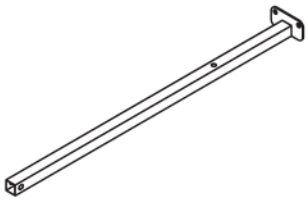 1PC	17 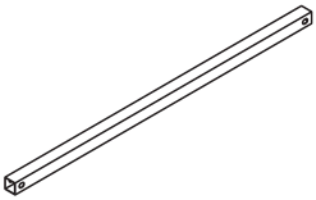 1PC	18 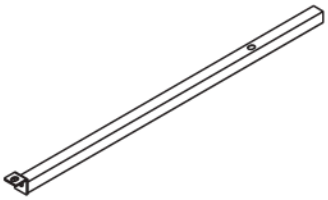 1PC
19 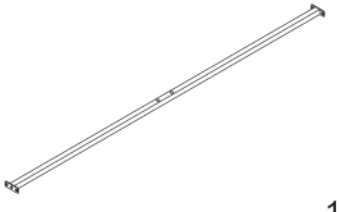 1PC	20 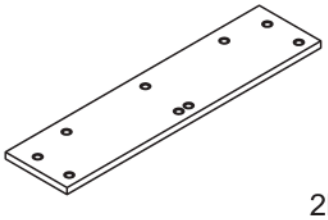 2PCS	21 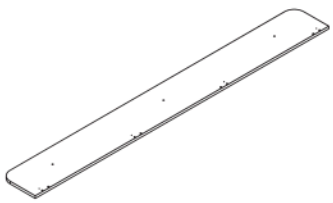 1PC

PARTS LIST

22 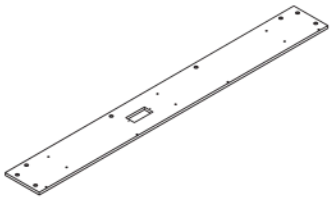 1PC	23 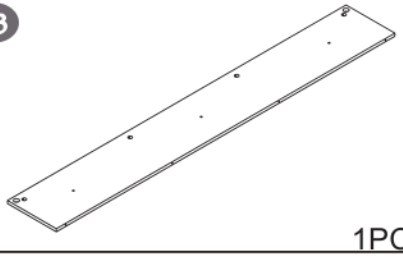 1PCS	24 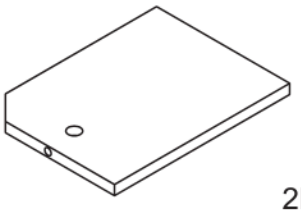 2PCS
25 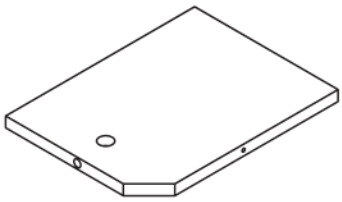 1PC	26 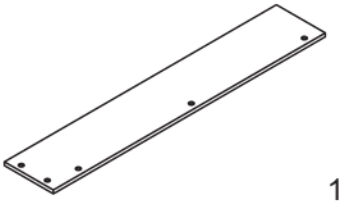 1PC	27 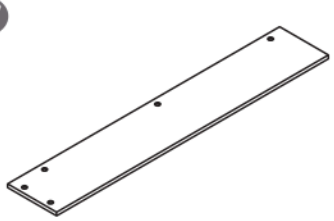 1PC
28 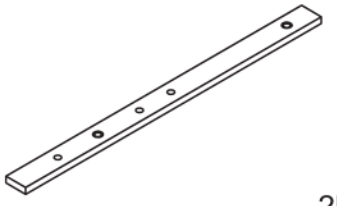 2PCS	29 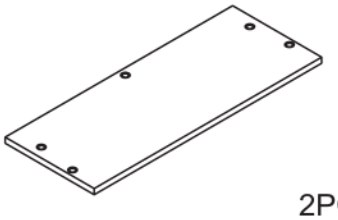 2PCS	30 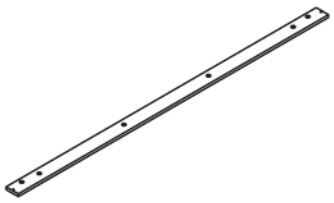 1PC
31 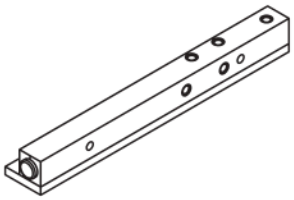 1PC	32 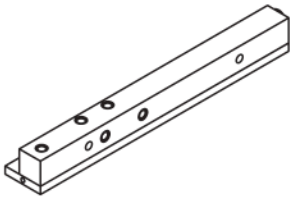 1PC	33 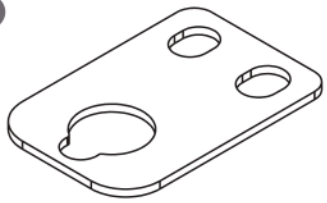 6PCS
34 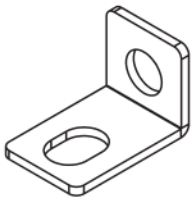 16PCS	L 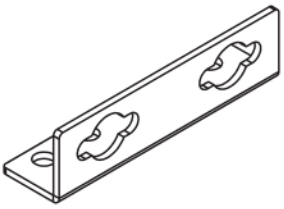 4PCS	X 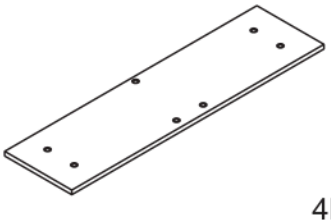 4PCS
V  16PCS	X2  4PCS	

PARTS LIST

A  M8x12 92PCS	B  M8x14 Colored Zinc 6PCS	C  M8x18 white Zinc 13PCS
D  M8x30 9PCS	E  M8x35 Colored Zinc 25PCS	F  M8x45 14PCS
G  M8x50 Colored Zinc 8PCS	H  M4x10 16PCS	I  M5x40 13PCS
J  ST4.2x12 2PCS	M  ST3.2x12 4PCS	N 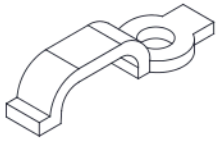 4PCS
O 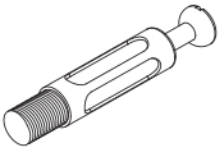 φ7x40 7PCS	P  φ15x9.5 7PCS	Q 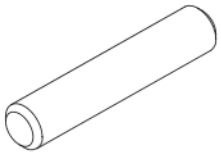 φ6x40 8PCS
R 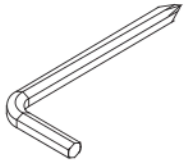 M8 1PC	S 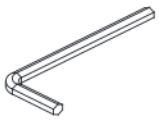 M5 1PC	T 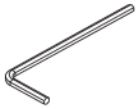 M4 1PC
W 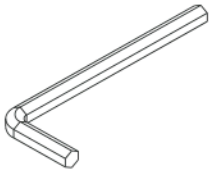 M8 1PC	U 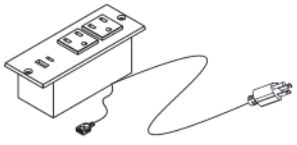 1PC	K  1PC

1

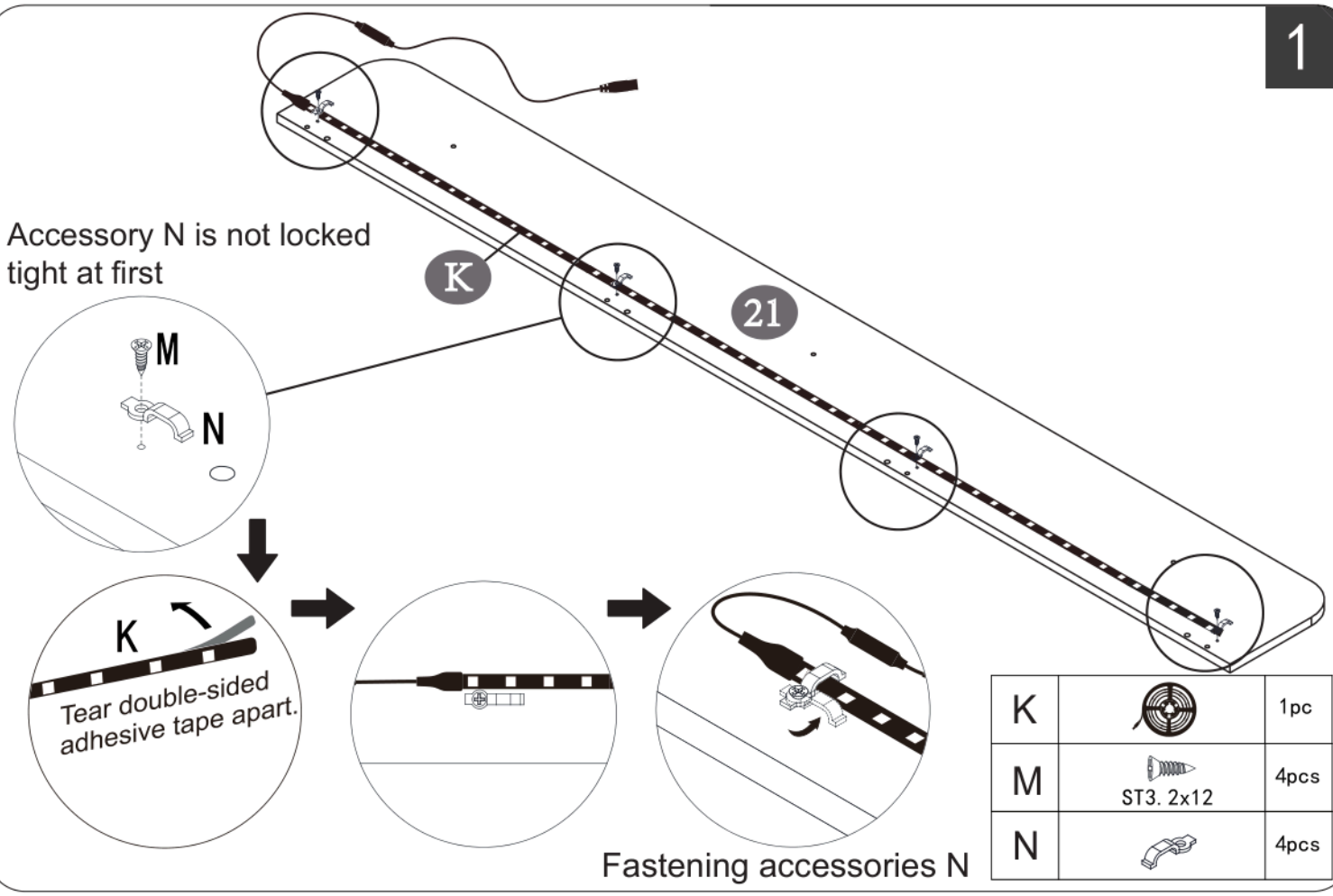

K		1pc
M	ST3. 2x12	4pcs
N		4pcs

2

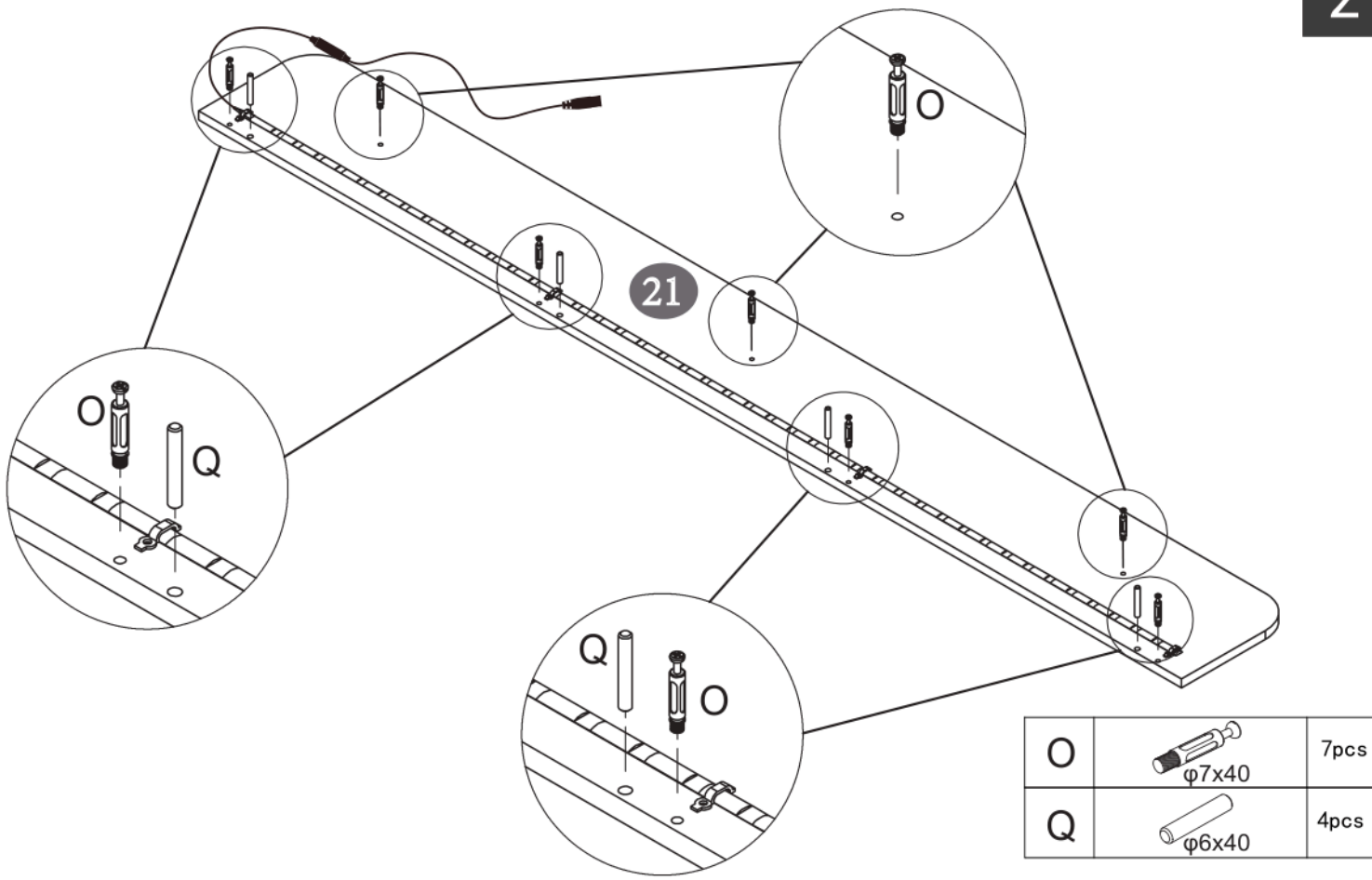

O	φ7x40	7pcs
Q	φ6x40	4pcs

3

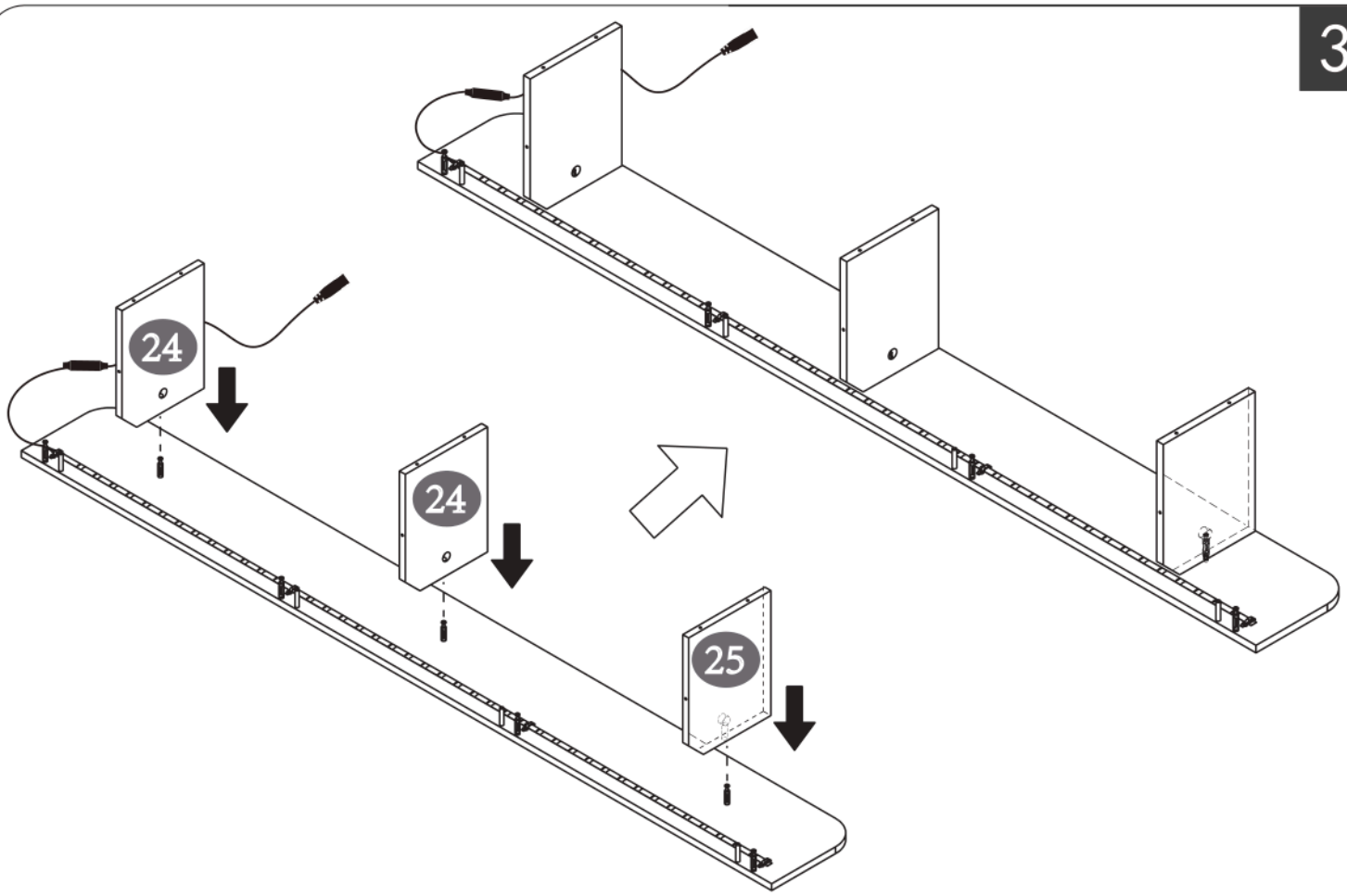

4

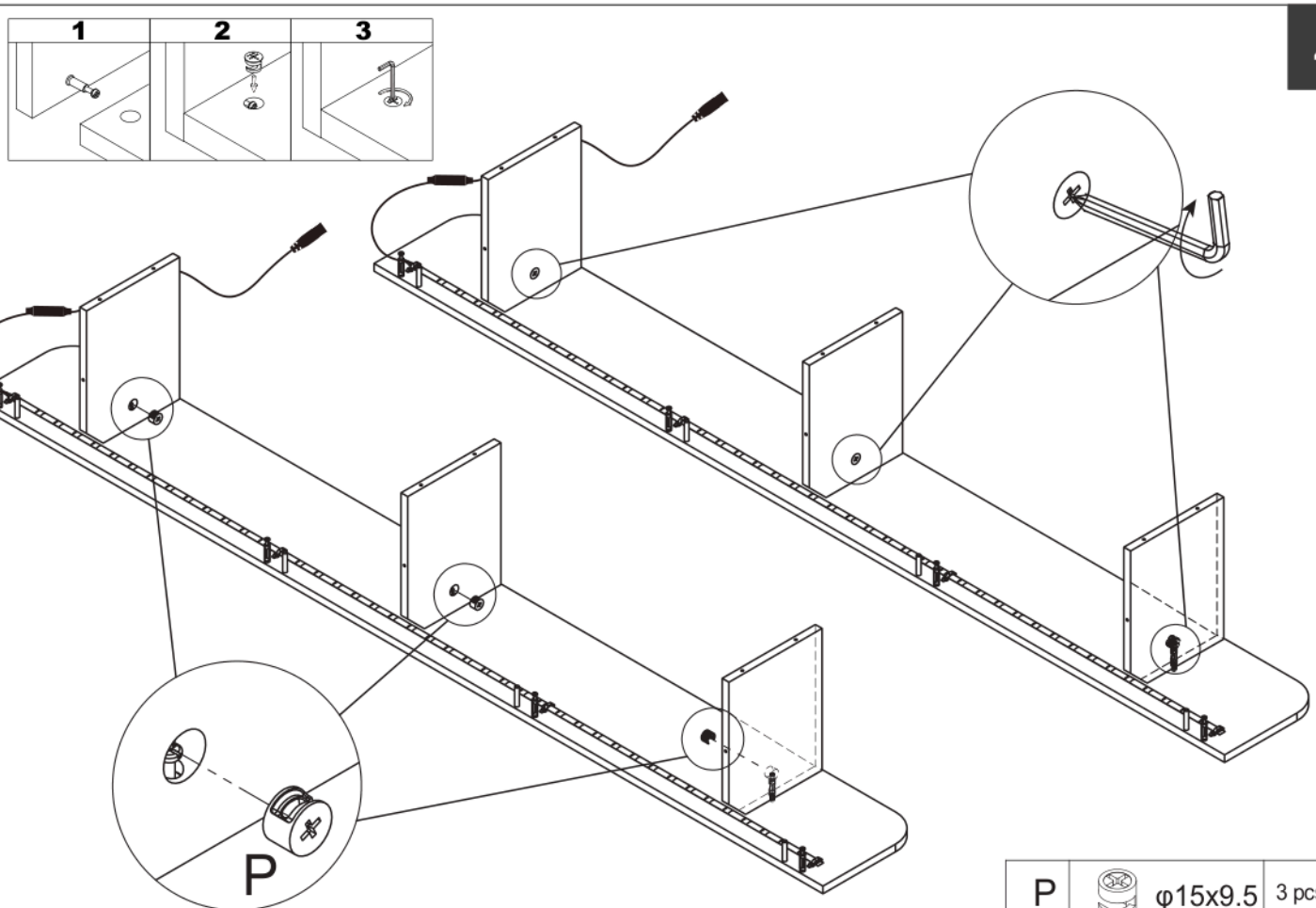

P		φ15x9.5	3 pcs

5

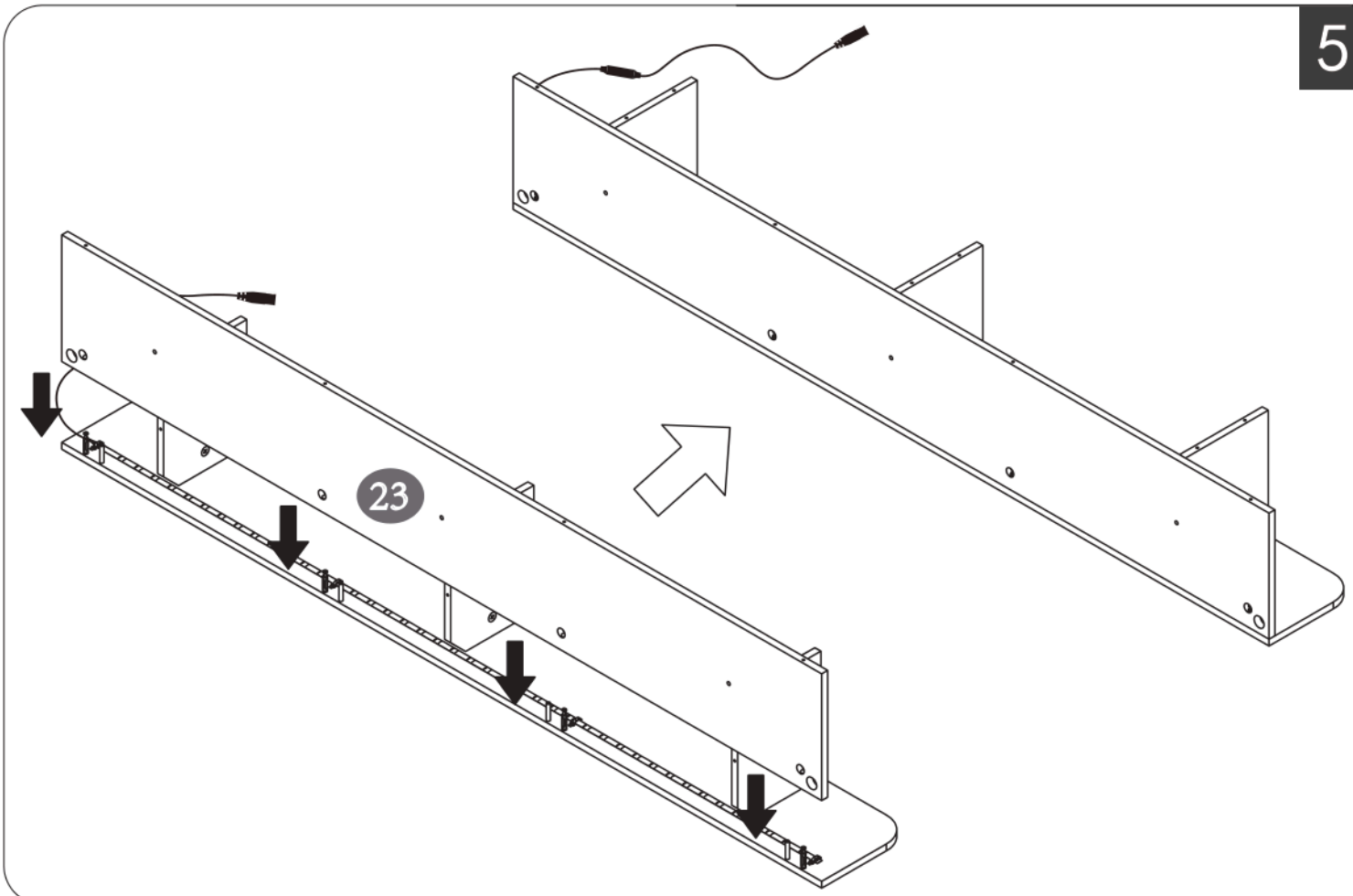

6

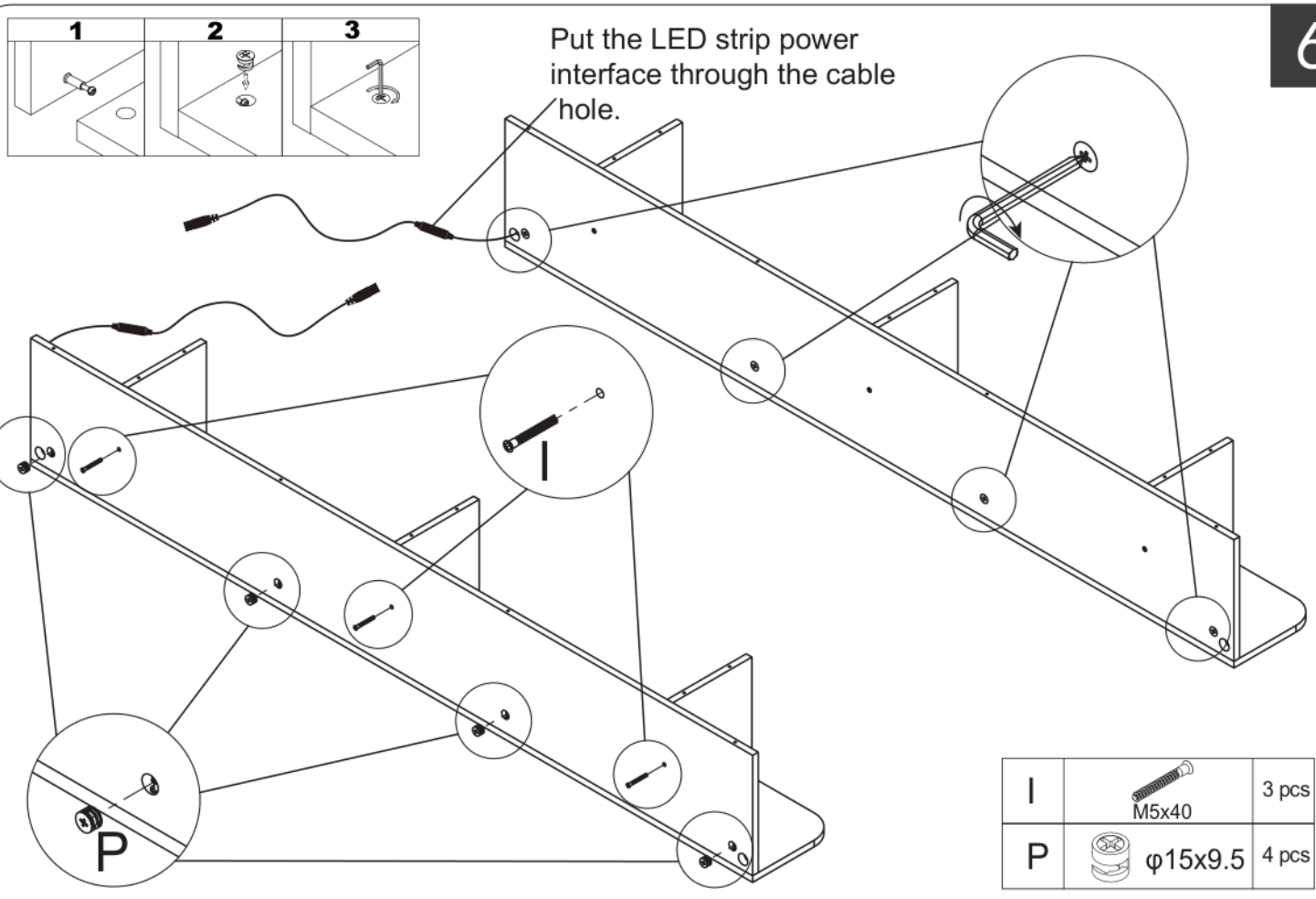

I	M5x40	3 pcs
P	φ15x9.5	4 pcs

7

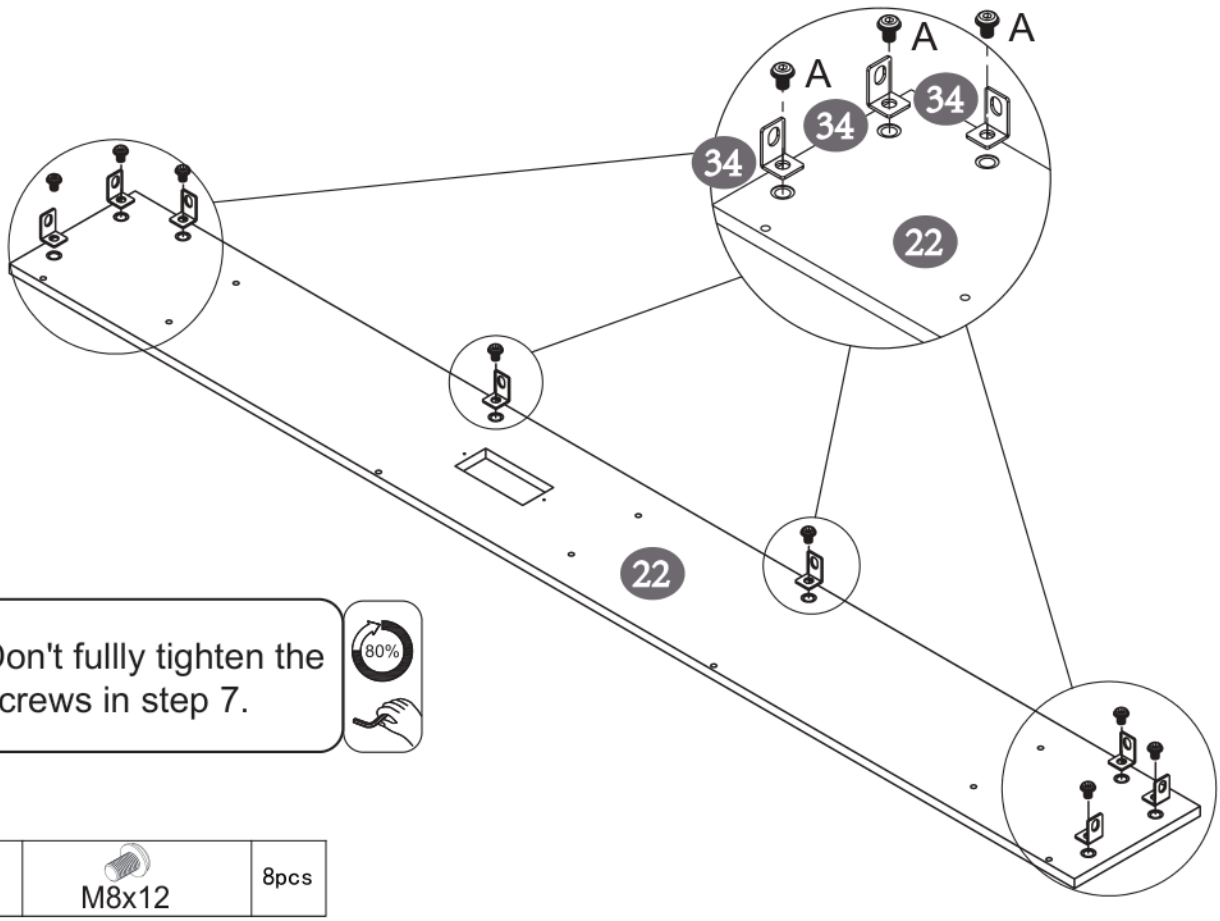

Don't fullly tighten the screws in step 7.

80%

A	M8x12	8pcs

8

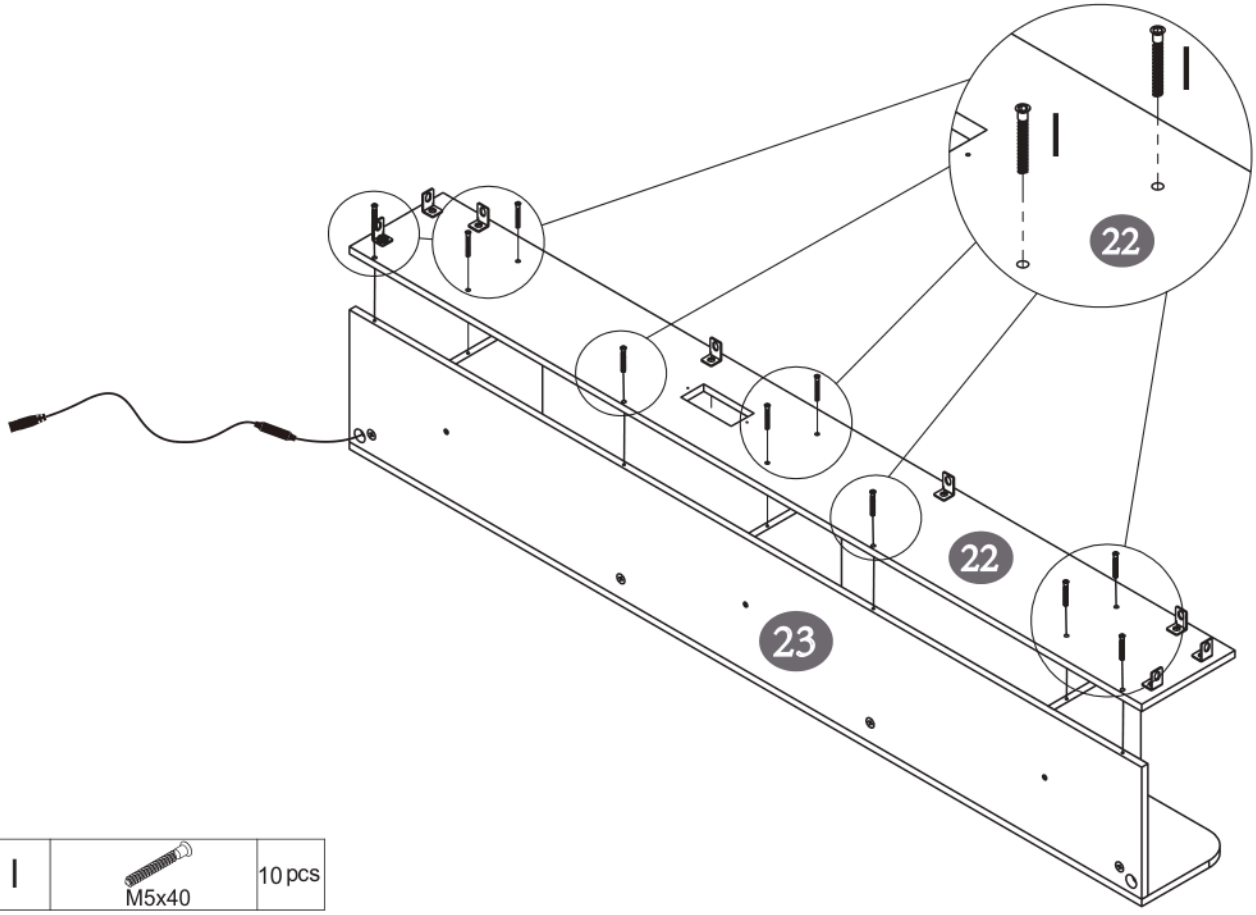

I	M5x40	10 pcs

9

Don't fullly tighten the screws in step 9.

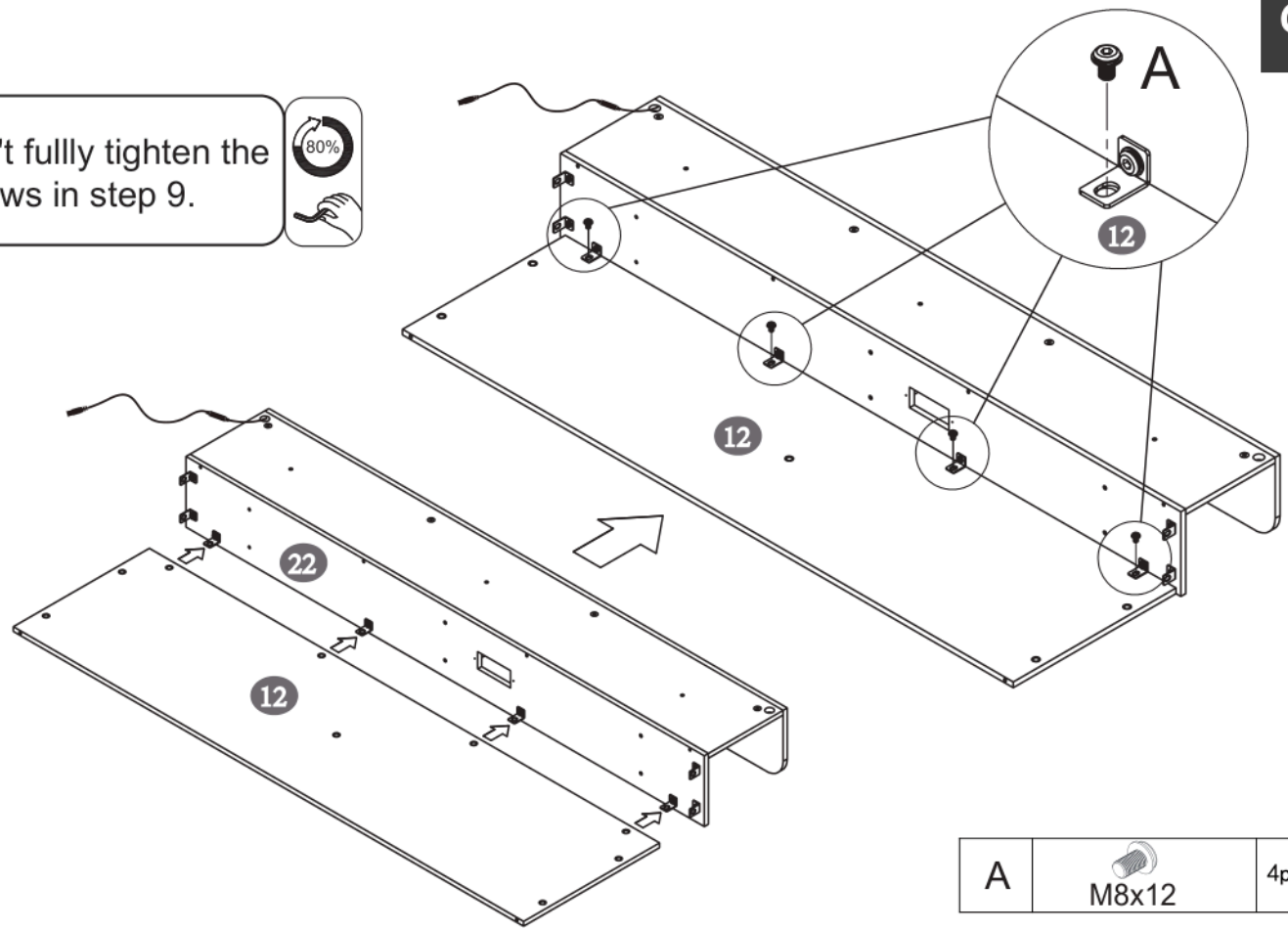

A	M8x12	4pcs

10

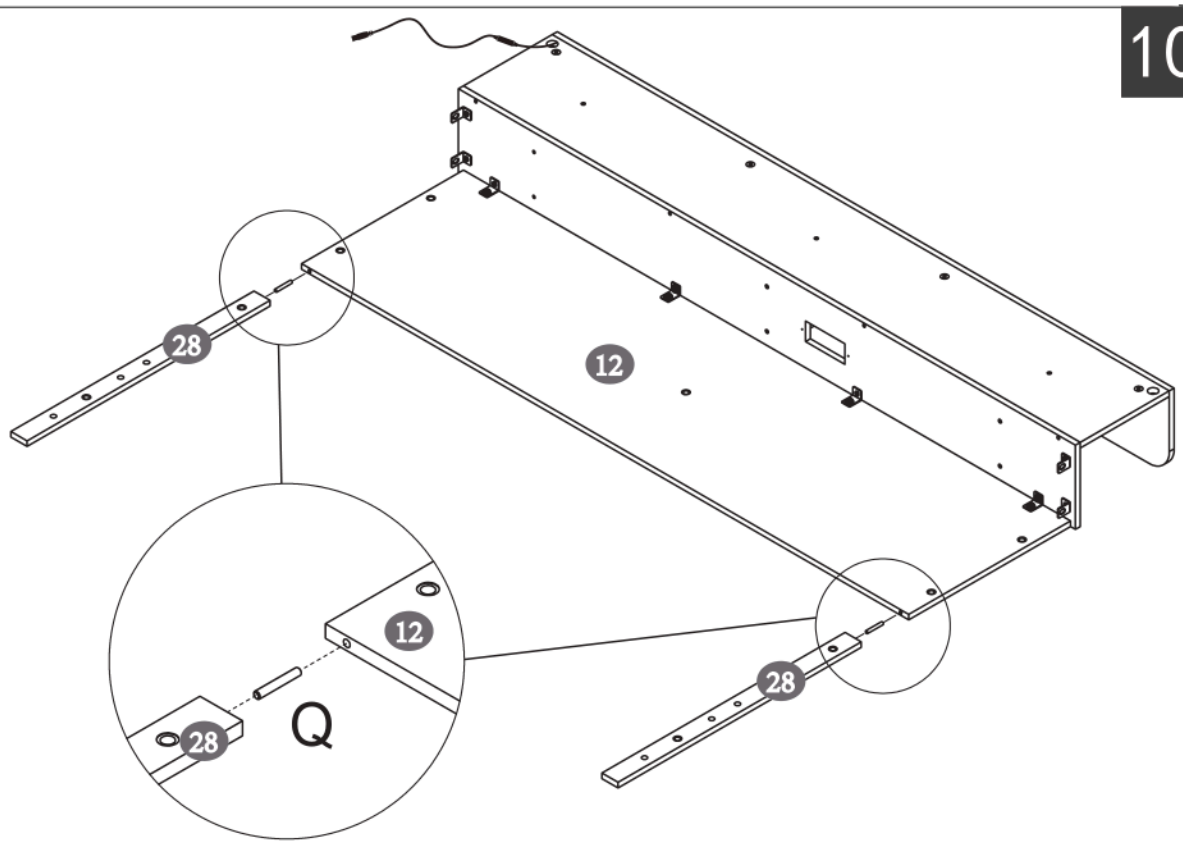

Q	φ6x40	2pcs

11

Don't fullly tighten the screws in step 11.

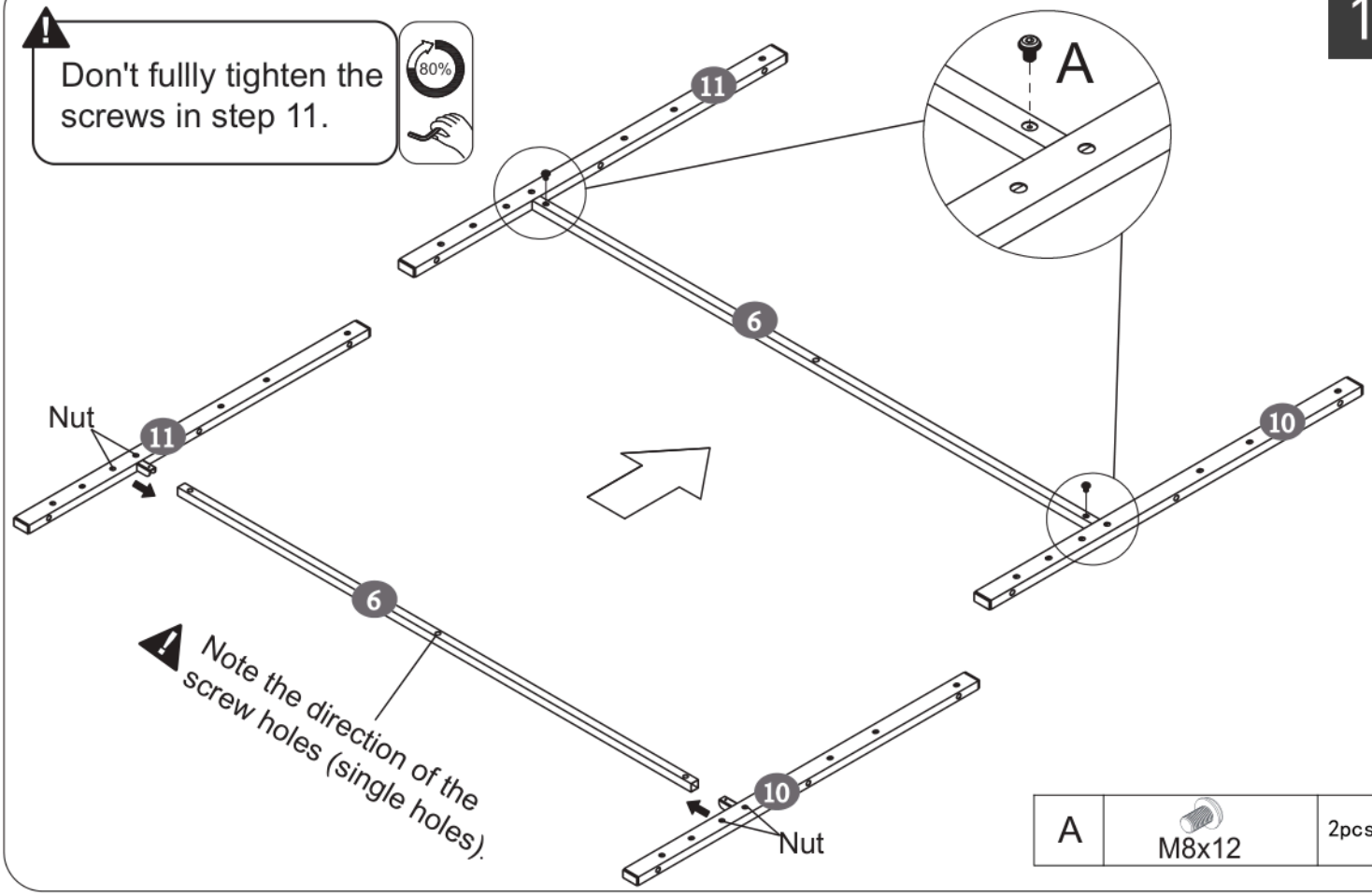

A	M8x12	2pcs

12

Don't fullly tighten the screws in step 12.

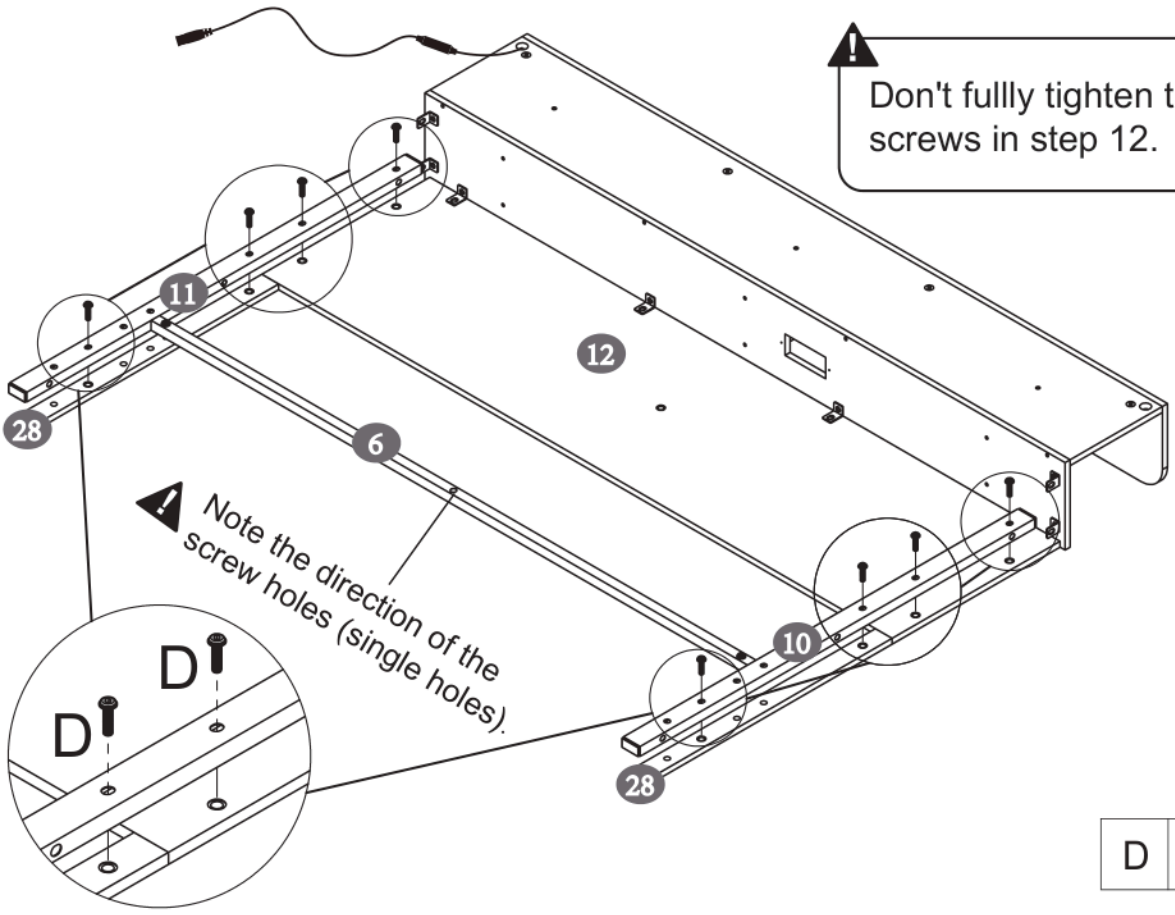

D	M8x30	8 pcs

13

Don't fullly tighten the screws in step 13.

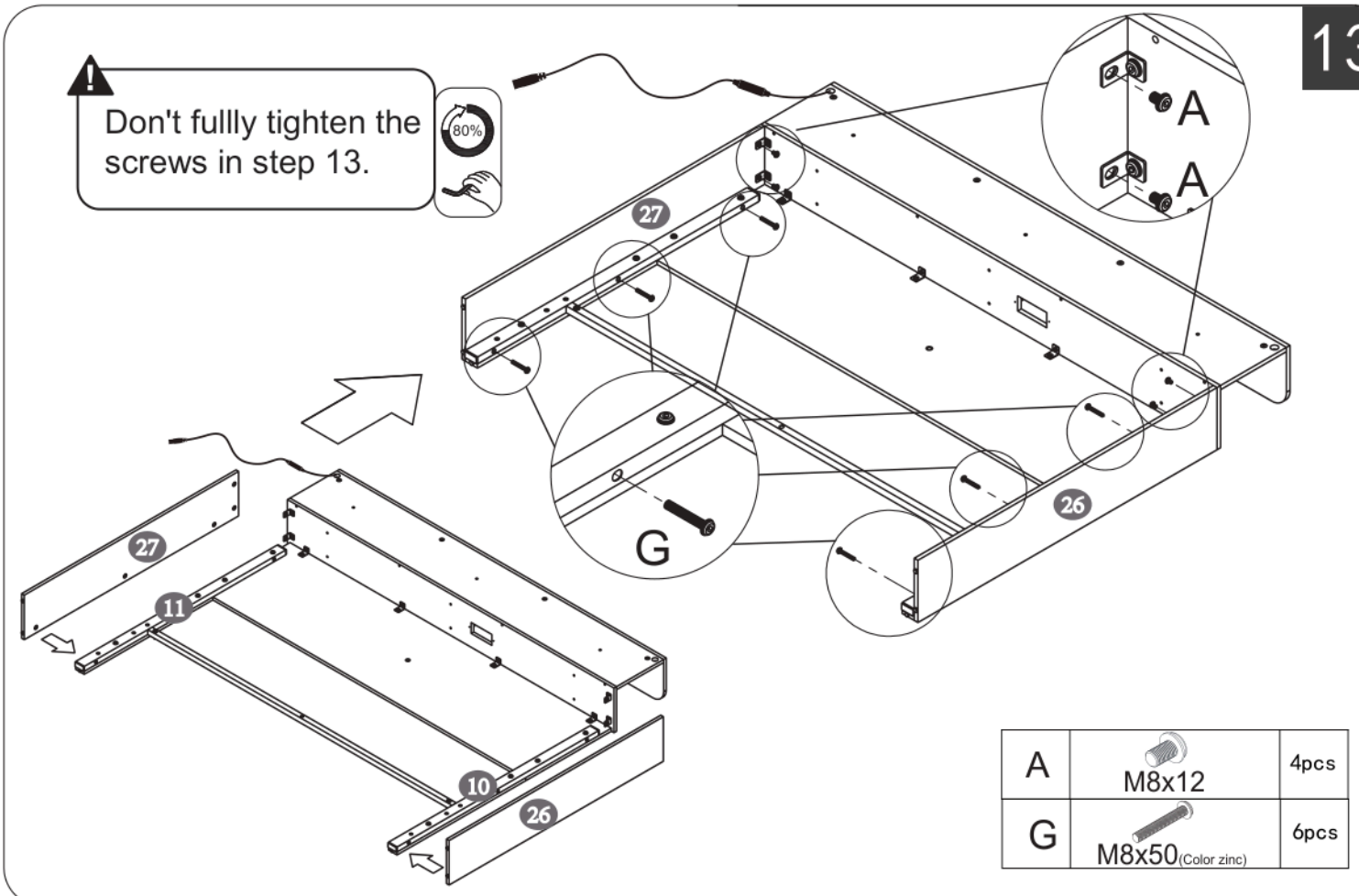

A	M8x12	4pcs
G	M8x50(Color zinc)	6pcs

14

Tighten all the screws.

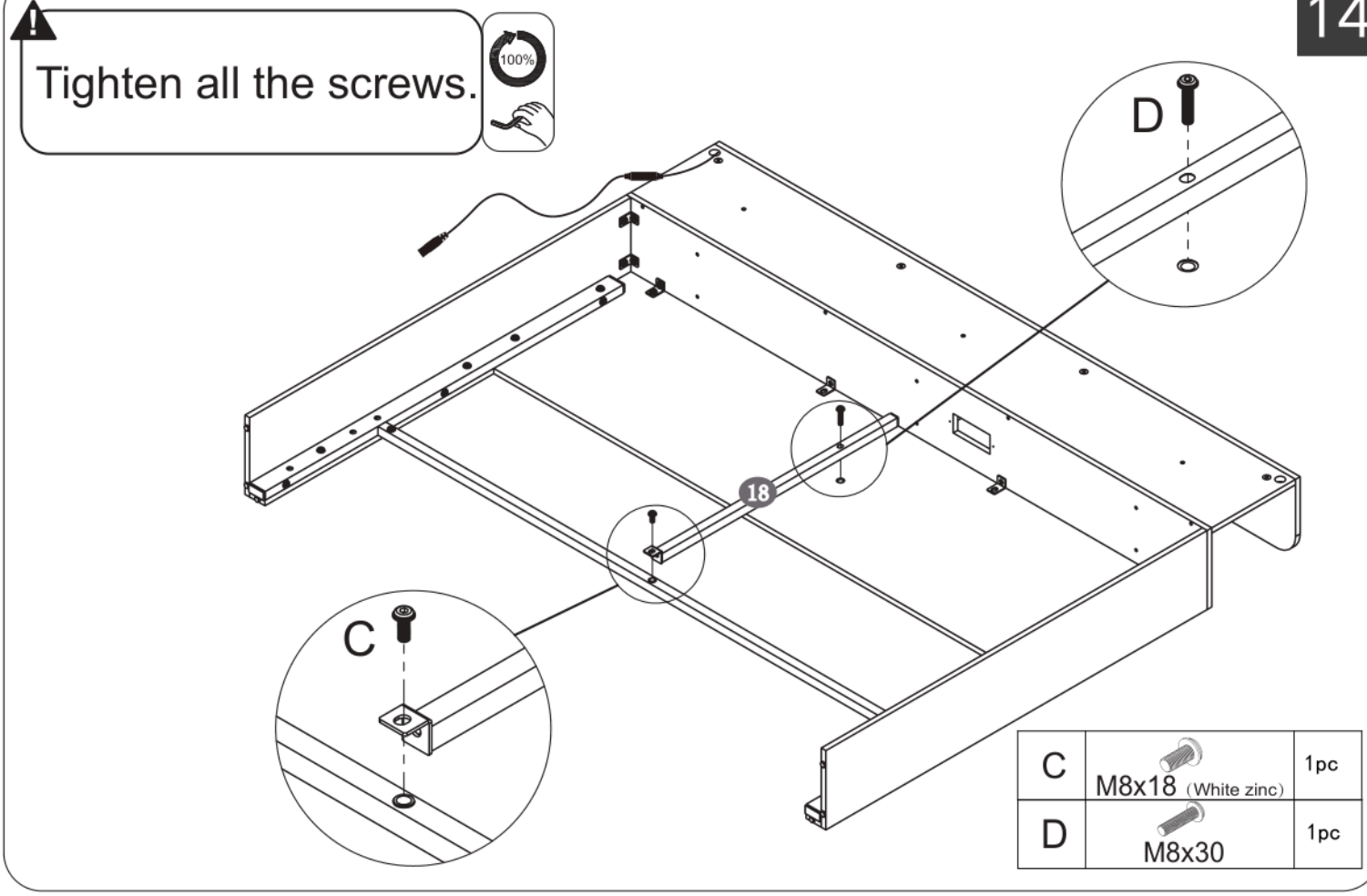

C	M8x18 (White zinc)	1pc
D	M8x30	1pc

15

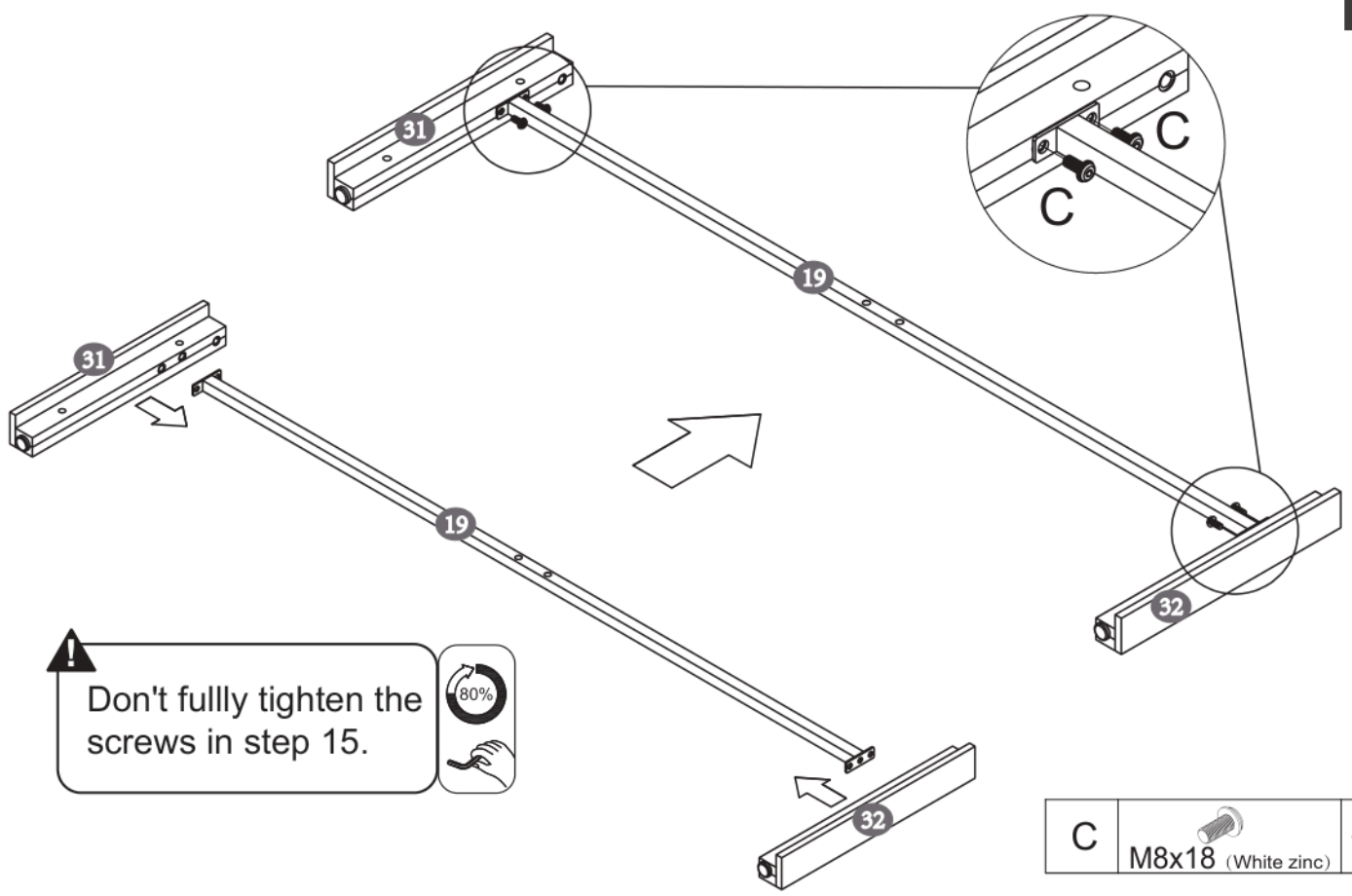

Don't fullly tighten the screws in step 15.

C	M8x18 (White zinc)	4pcs

16

Note: Pay attention to the direction of component 34 when installing, as shown in the figure!!!

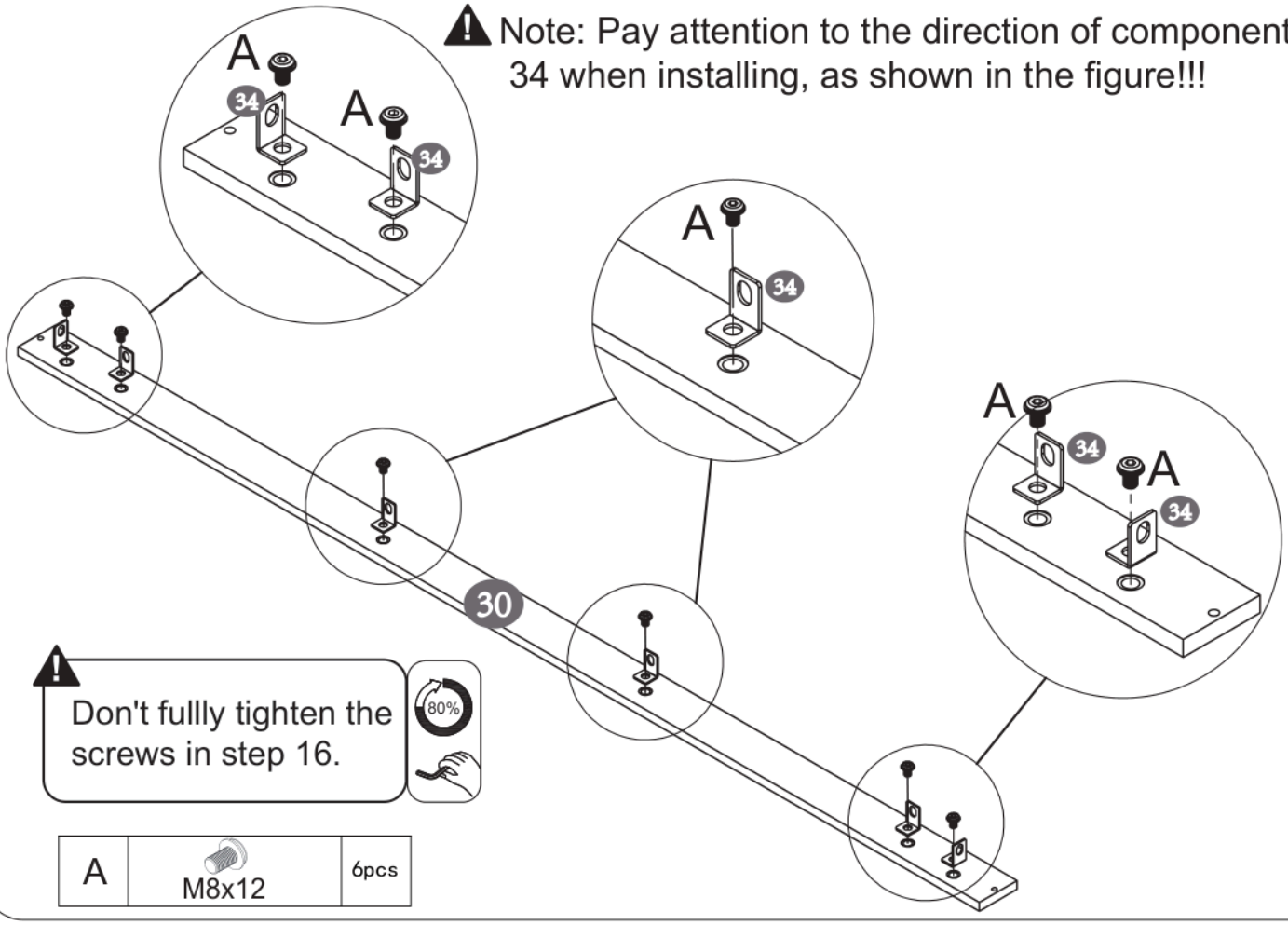

Don't fullly tighten the screws in step 16.

A	M8x12	6pcs

17

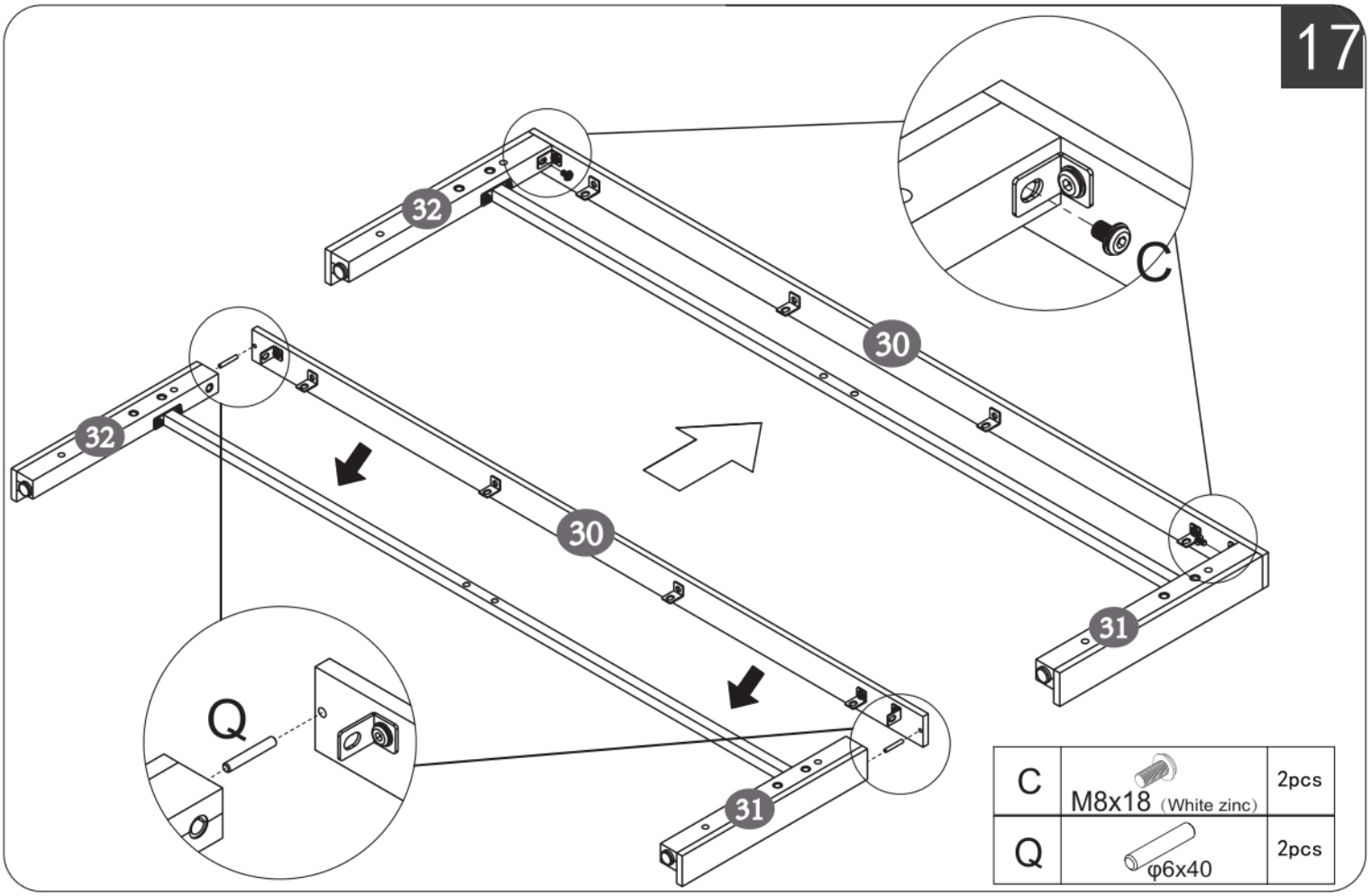

C	M8x18 (White zinc)	2pcs
Q	φ6x40	2pcs

18

Tighten all the screws.

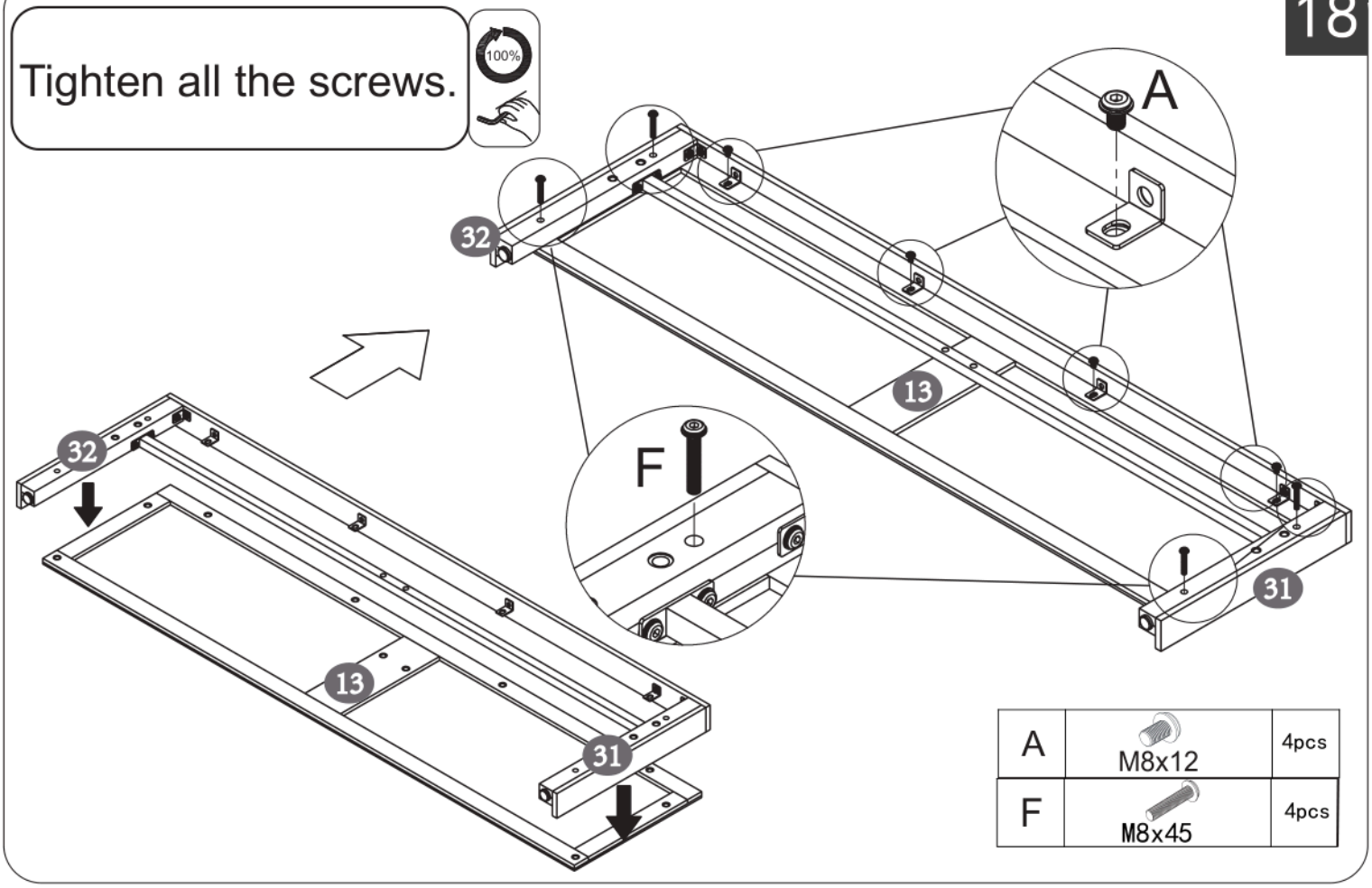

A	M8x12	4pcs
F	M8x45	4pcs

19

4X

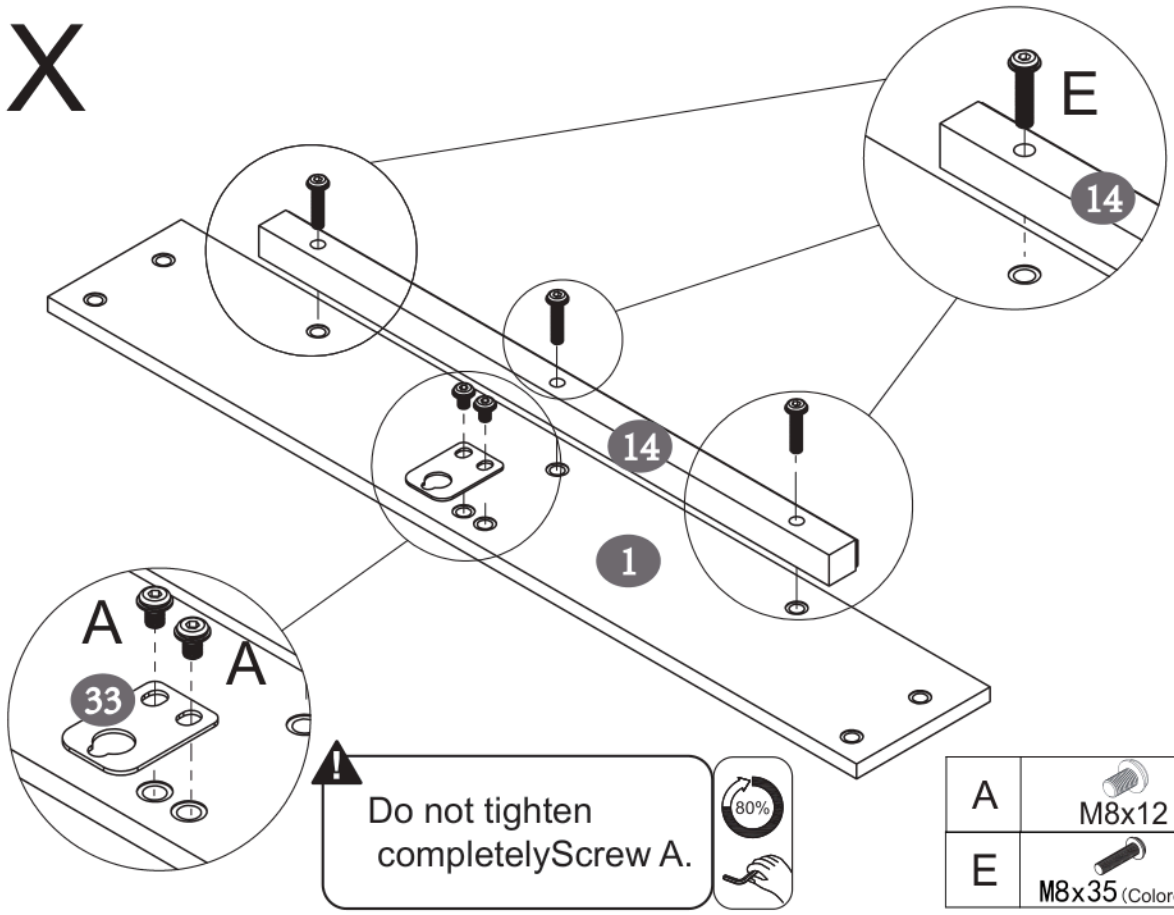

Do not tighten completelyScrew A.

80%

A	M8x12	8pcs
E	M8x35 (Colored Zinc)	12pcs

20

2X

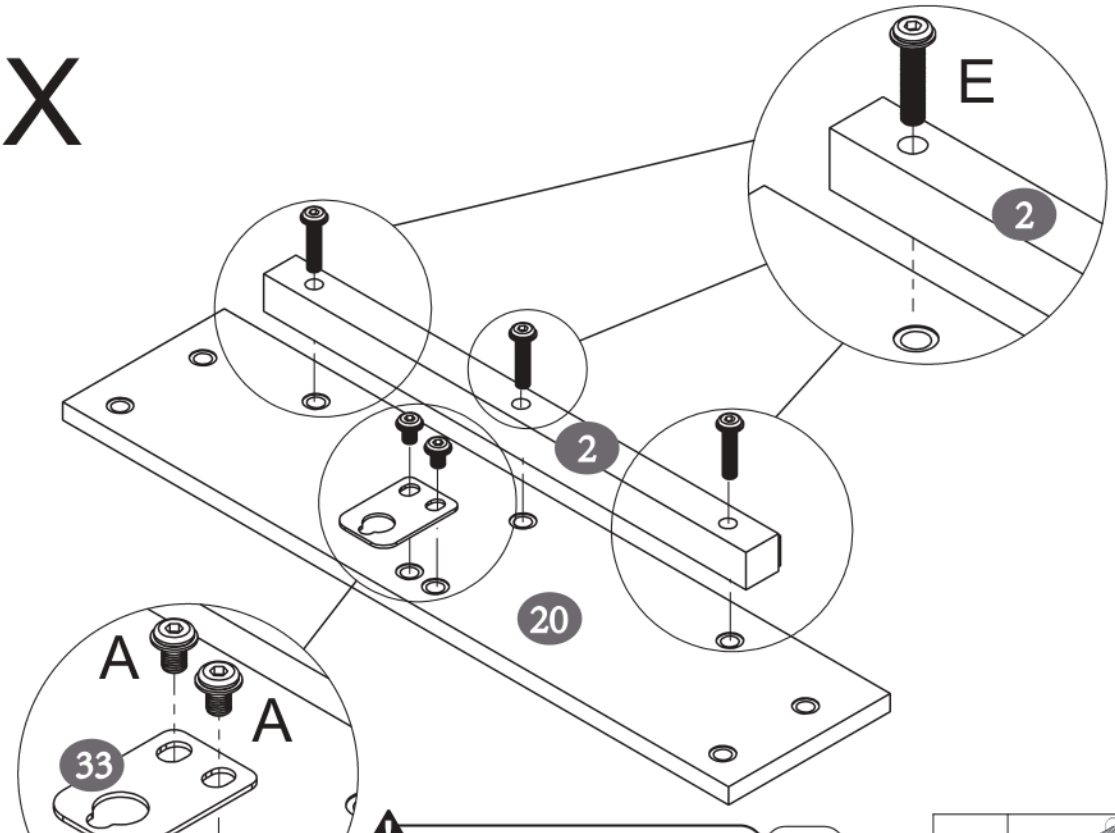

Do not tighten completelyScrew A.

80%

A	M8x12	4pcs
E	M8x35 (Colored Zinc)	6pcs

21

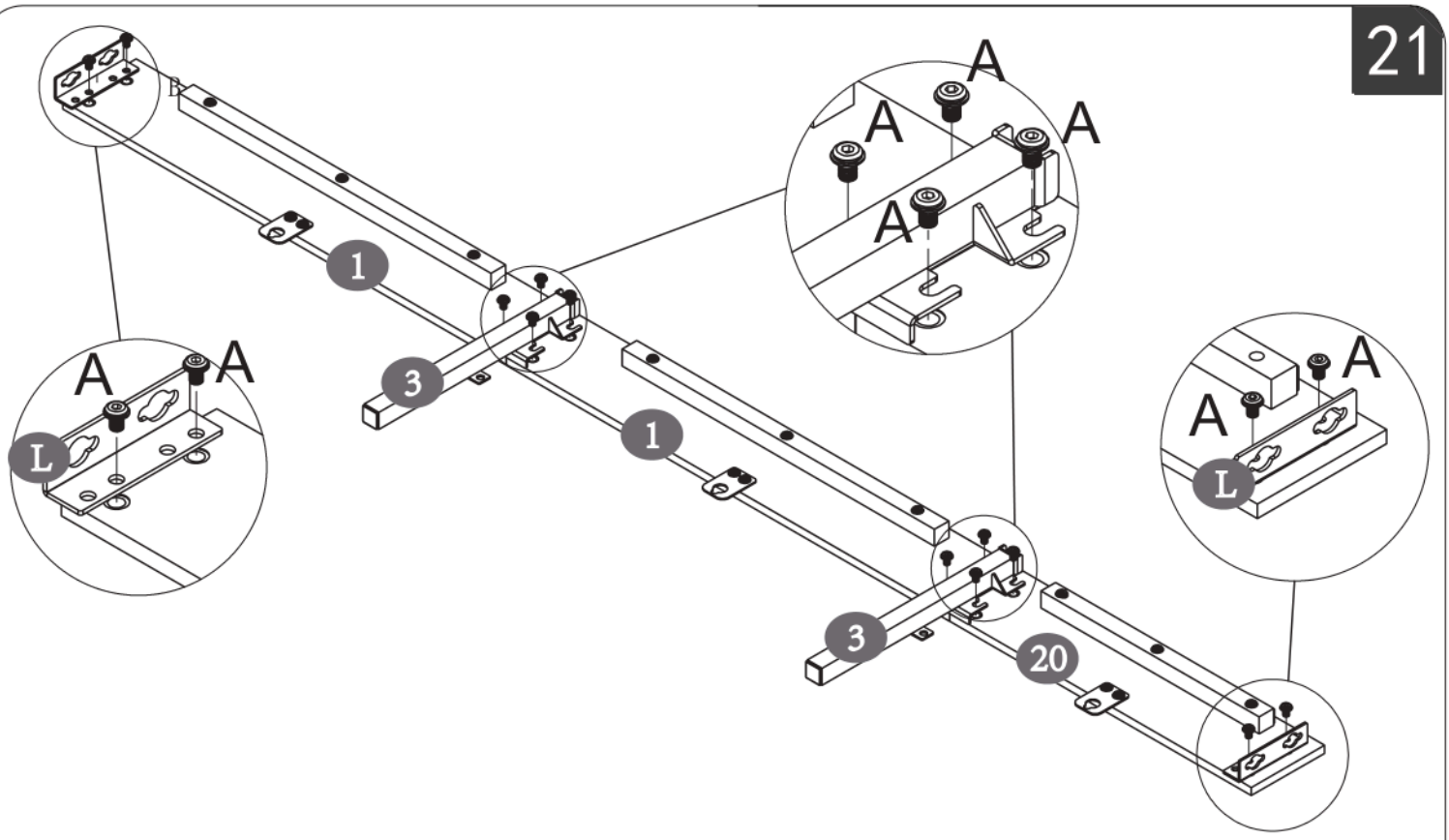

A	M8x12	12pcs

22

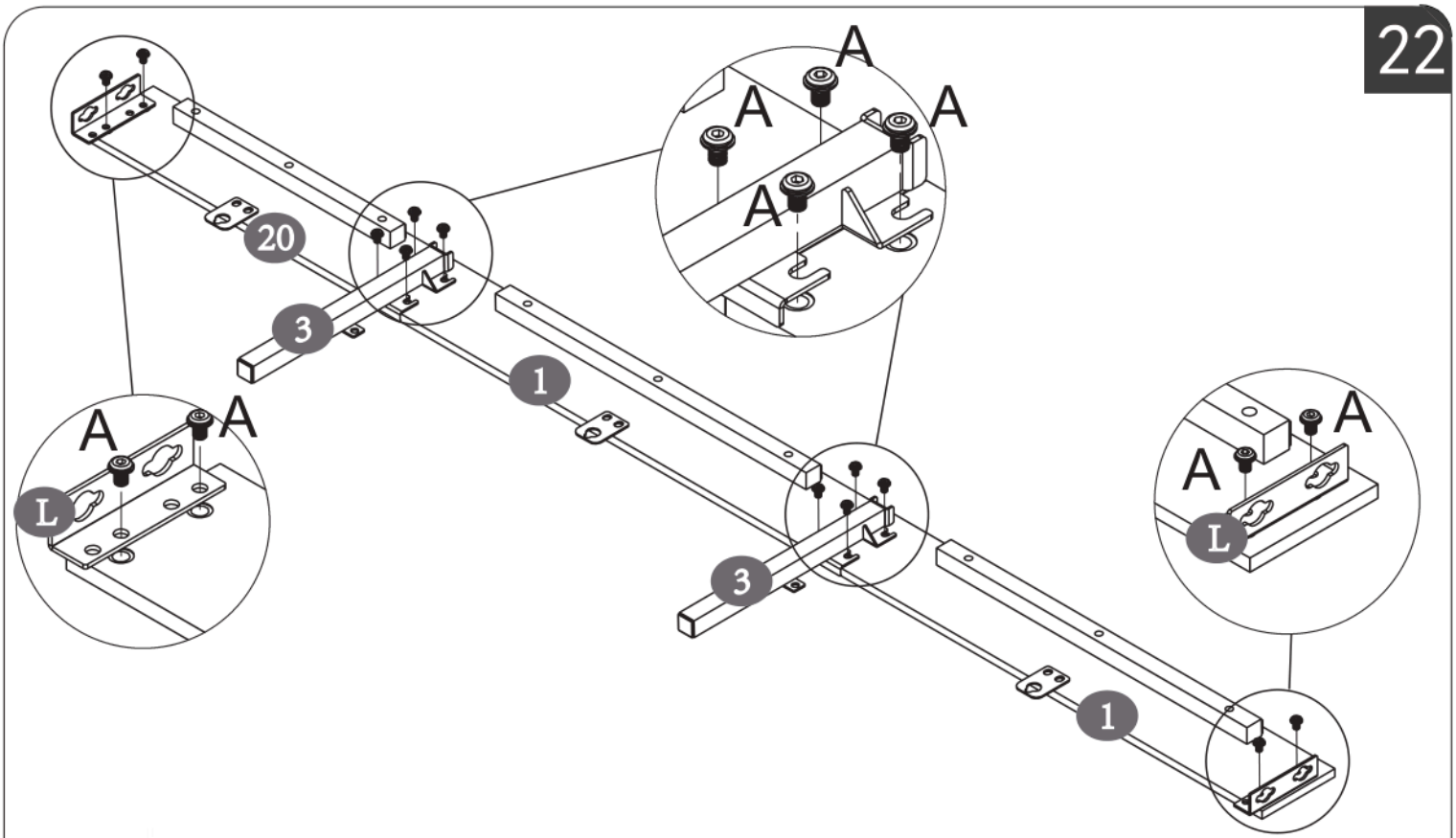

A	M8x12	12pcs

23

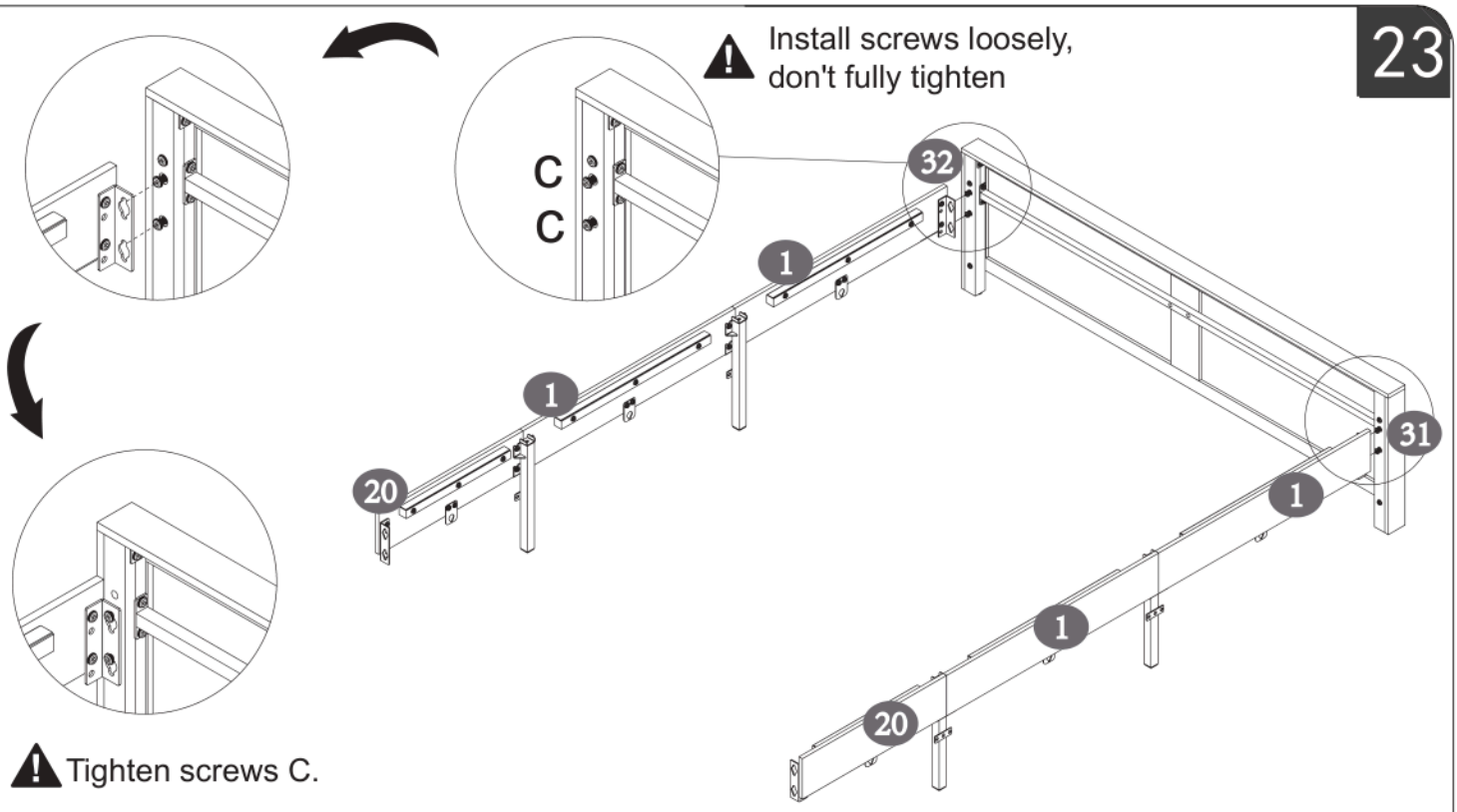

C	M8x18 (White zinc)	4pcs

24

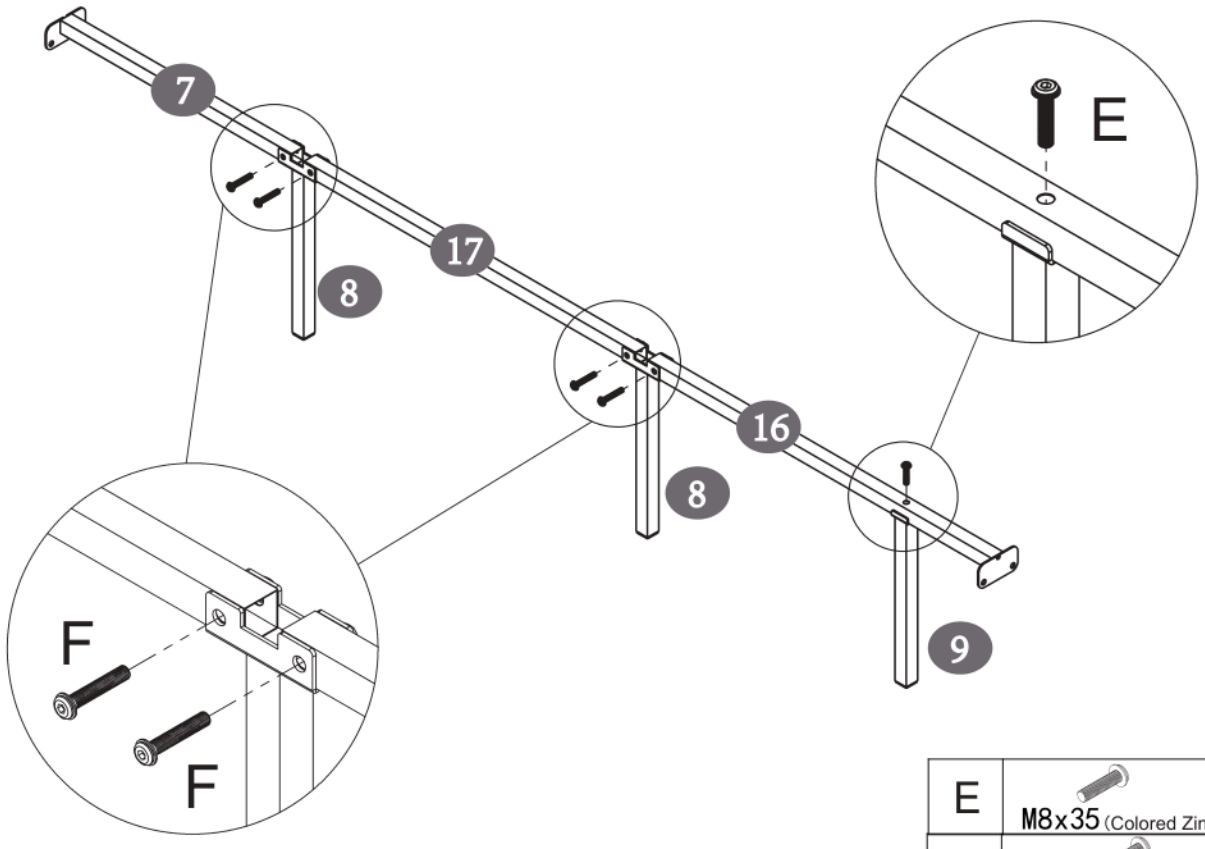

E	M8x35 (Colored Zinc)	1pc
F	M8x45	4pcs

25

Don't fullly tighten the screws in step 25.

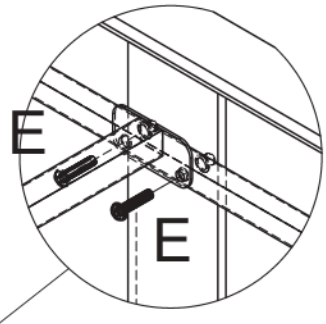

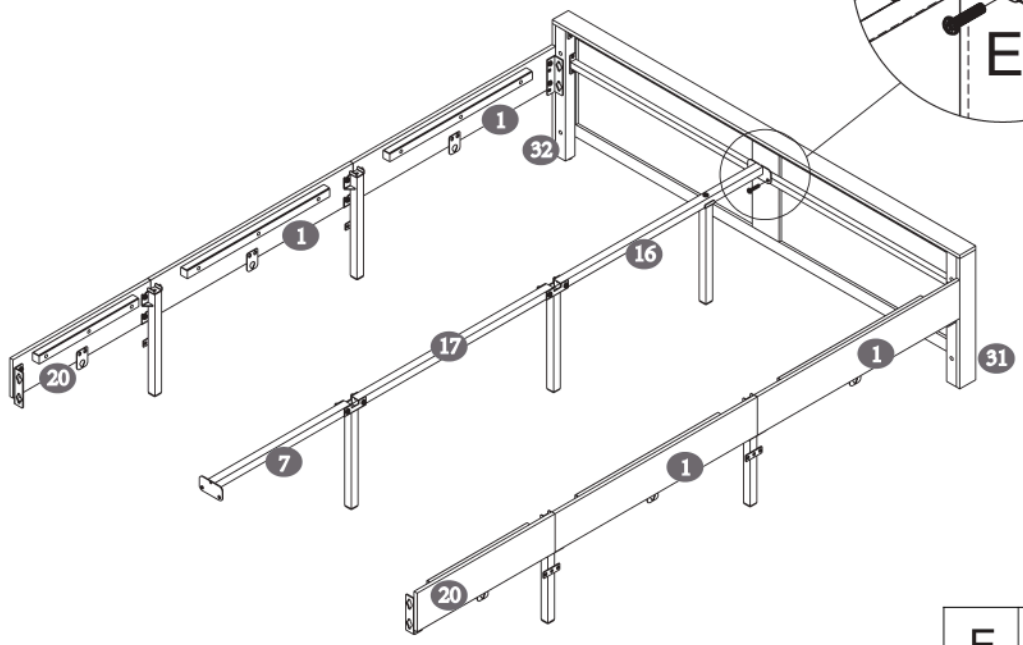

E	M8x35 (Colored Zinc)	2pcs

26

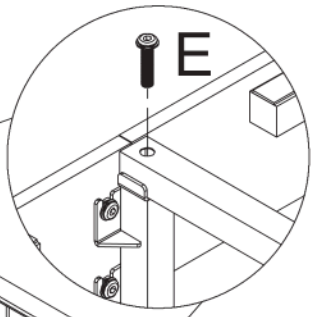

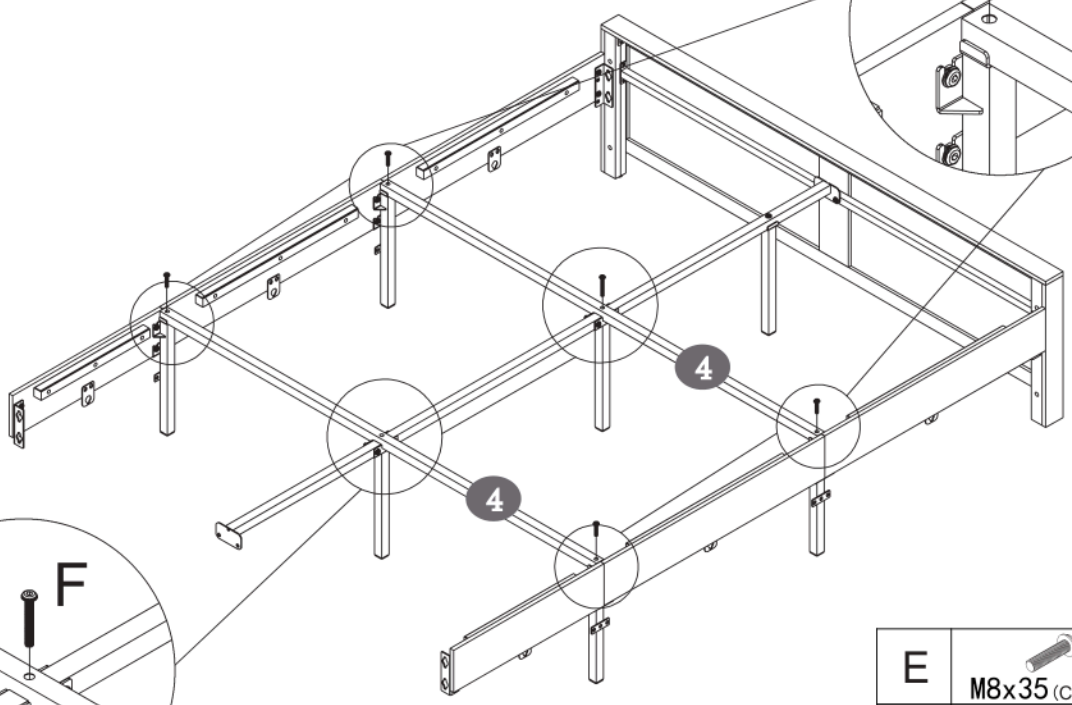

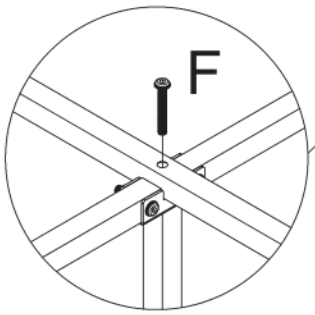

E	M8x35 (Colored Zinc)	4pcs
G	M8x50 (Colored Zinc)	2pcs

27

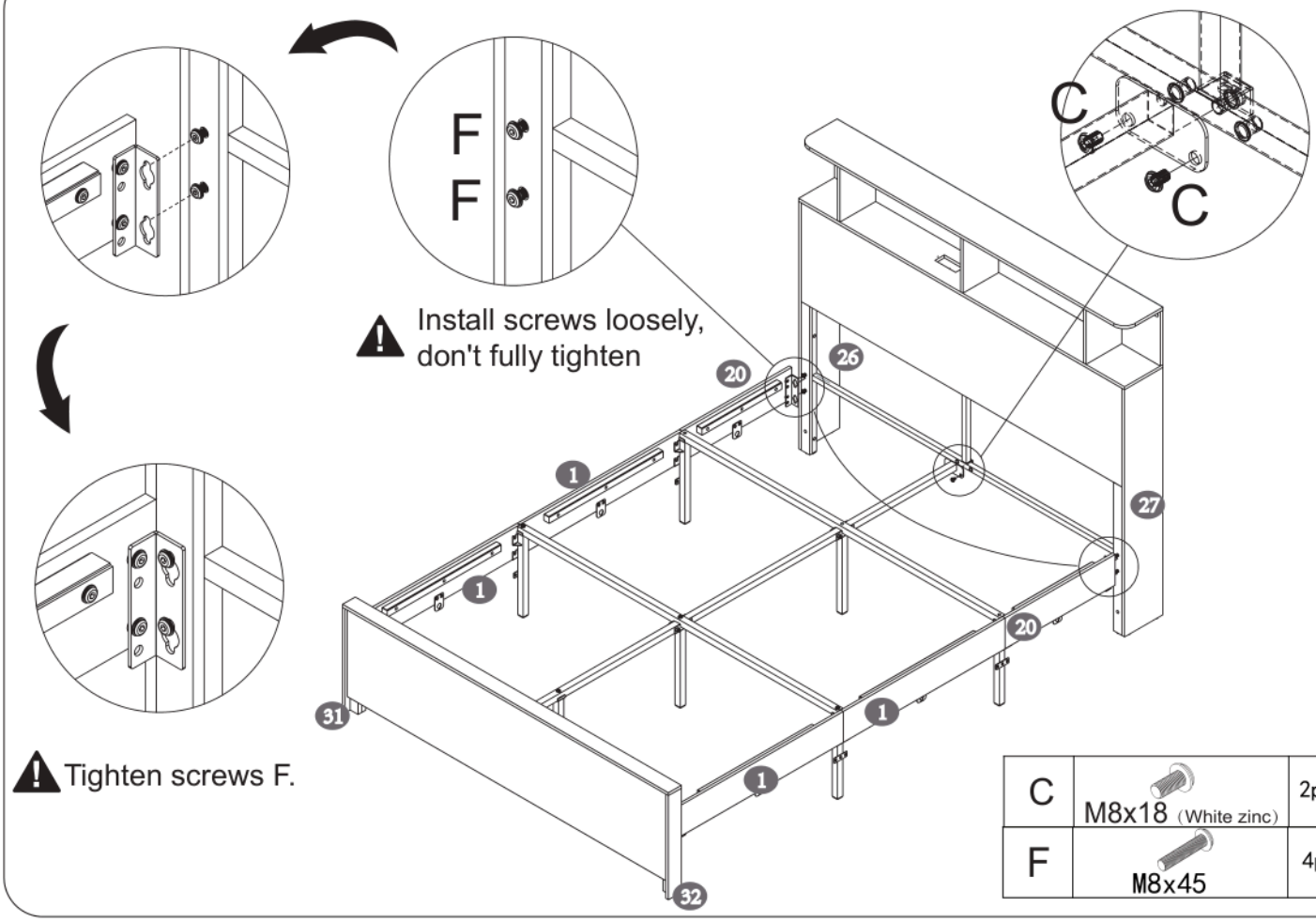

C	M8x18 (White zinc)	2pcs
F	M8x45	4pcs

28

2X

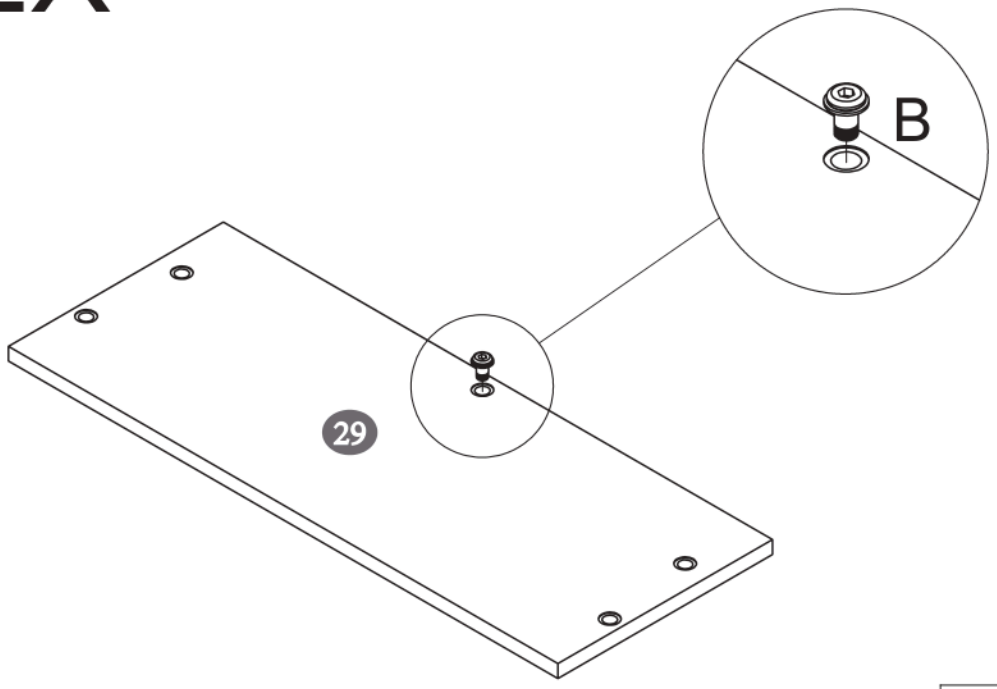

B	M8x14 (Color zinc)	2pcs

29

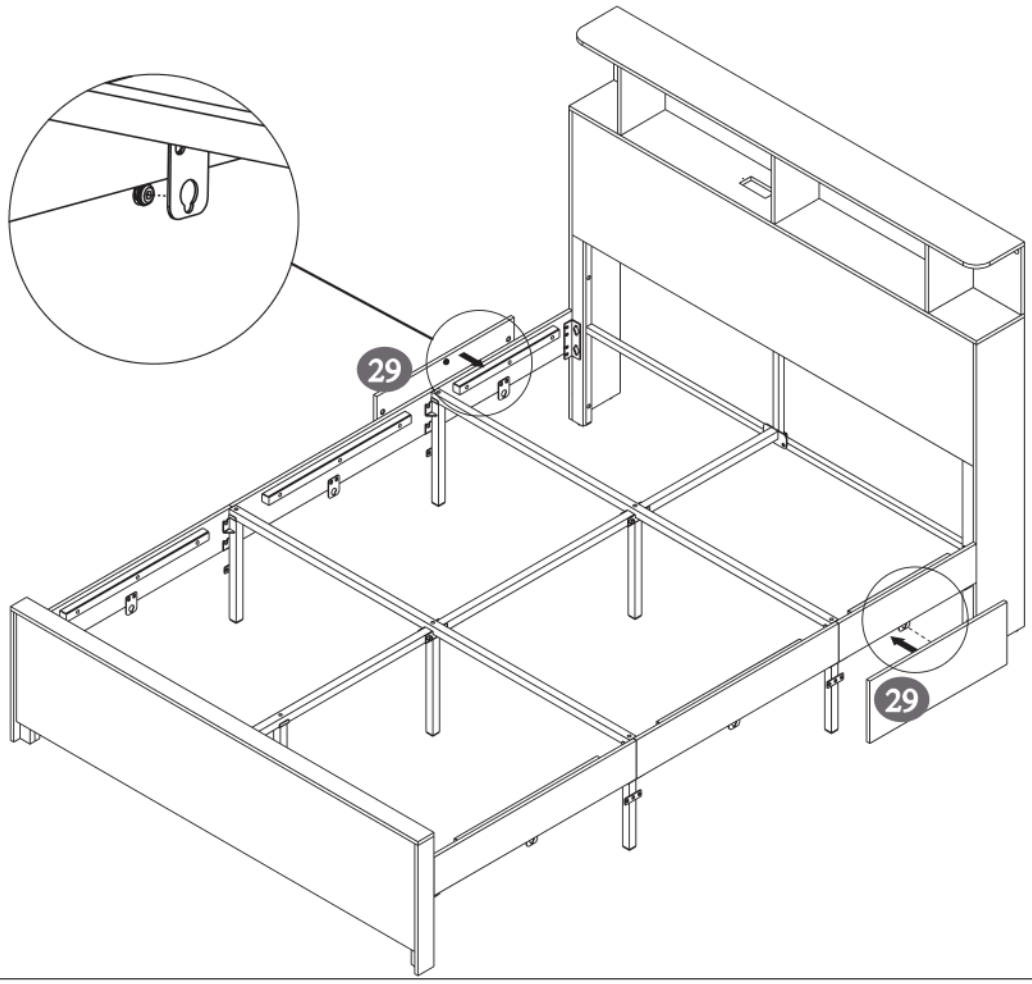

30

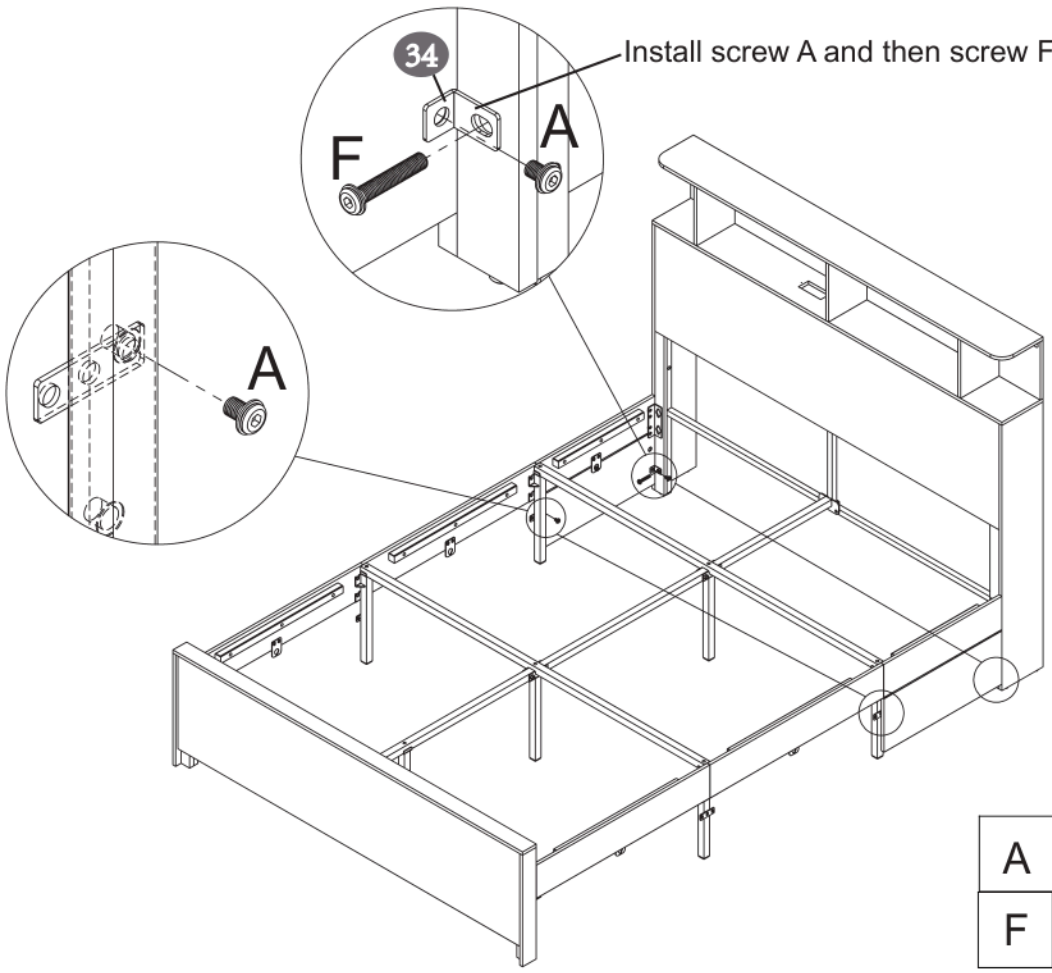

A	M8x12	4pcs
F	M8x45	2pcs

31

4X

⚠ Please mind to unfold the wire drawerand insert the locking pin !

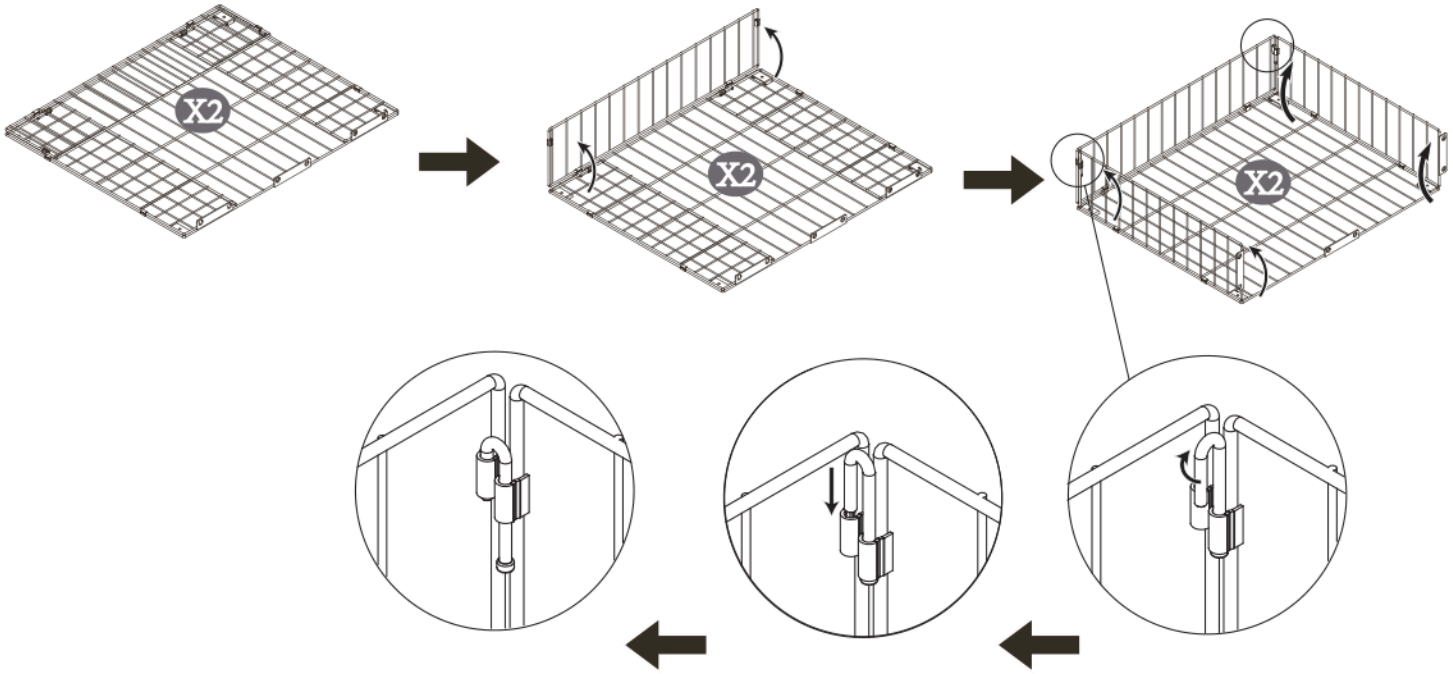

32

4X

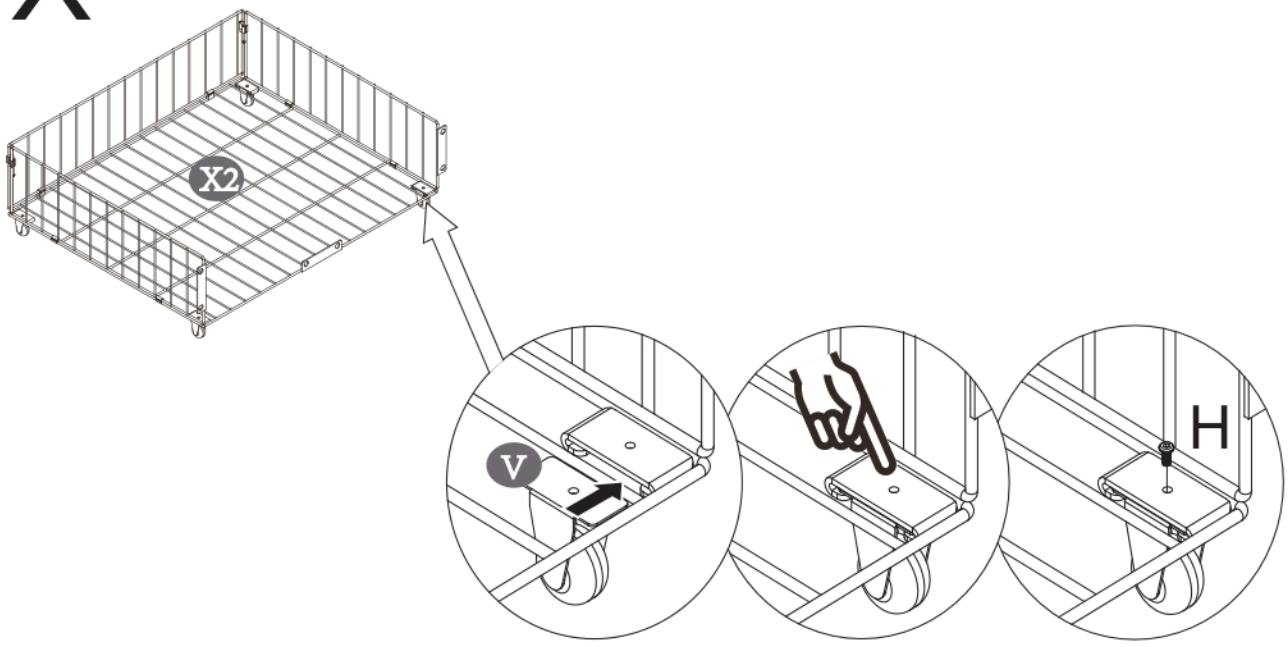

H	M4x10	16PCS

33

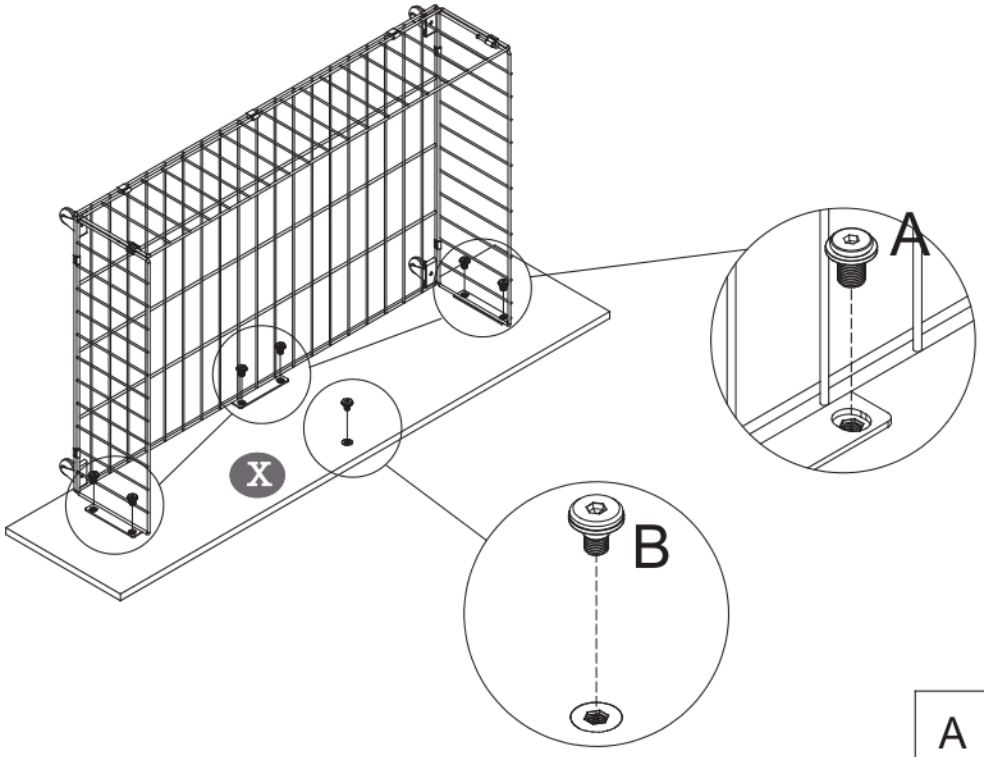

A	M8x12	24pcs
B	M8x14 (Color zinc)	4pcs

34

⚠ Gently lift the drawer, align the screw with the gourd hole, and then snap it in

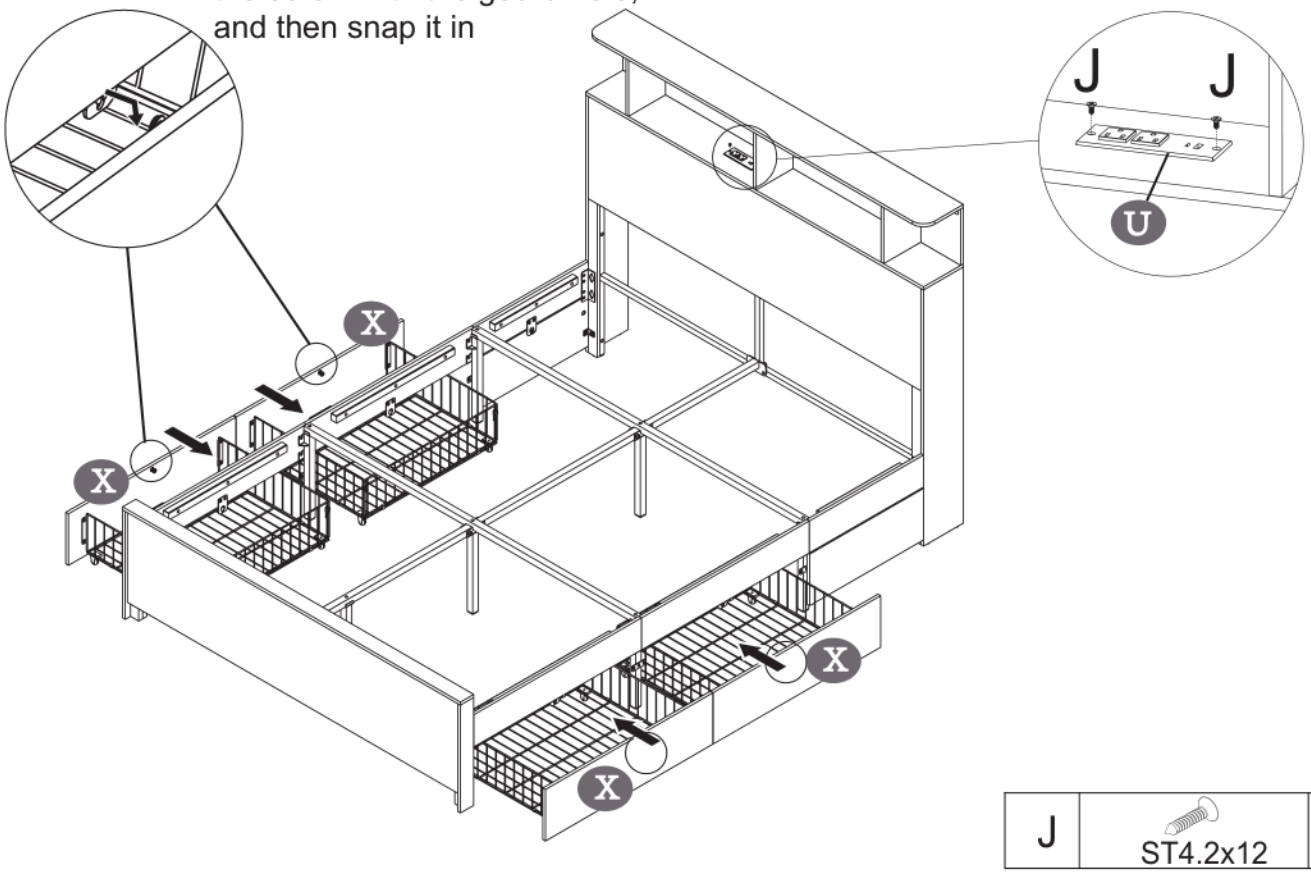

J	ST4.2x12	2pcs

35

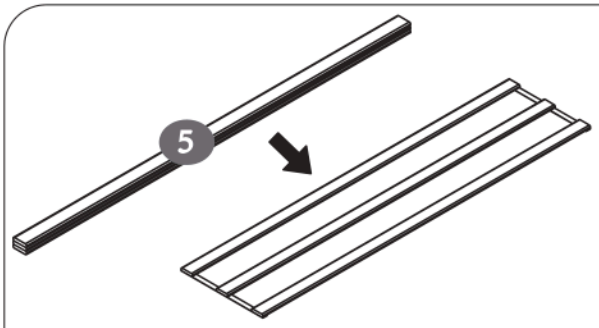

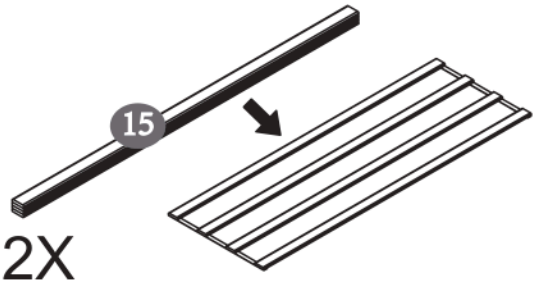

2X

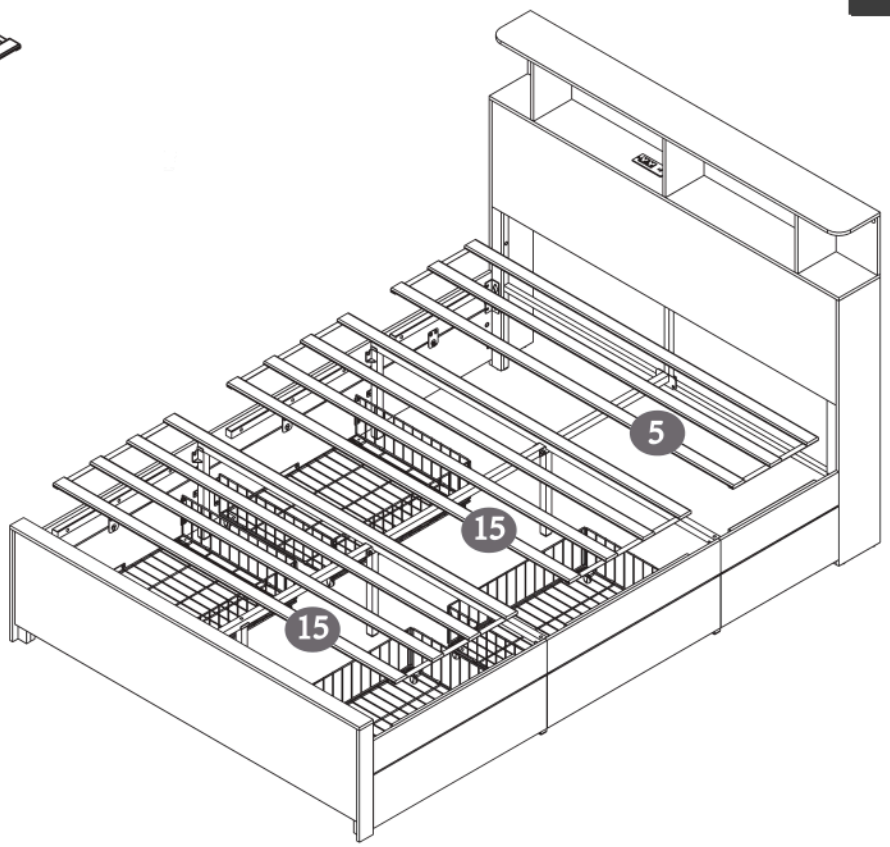

36

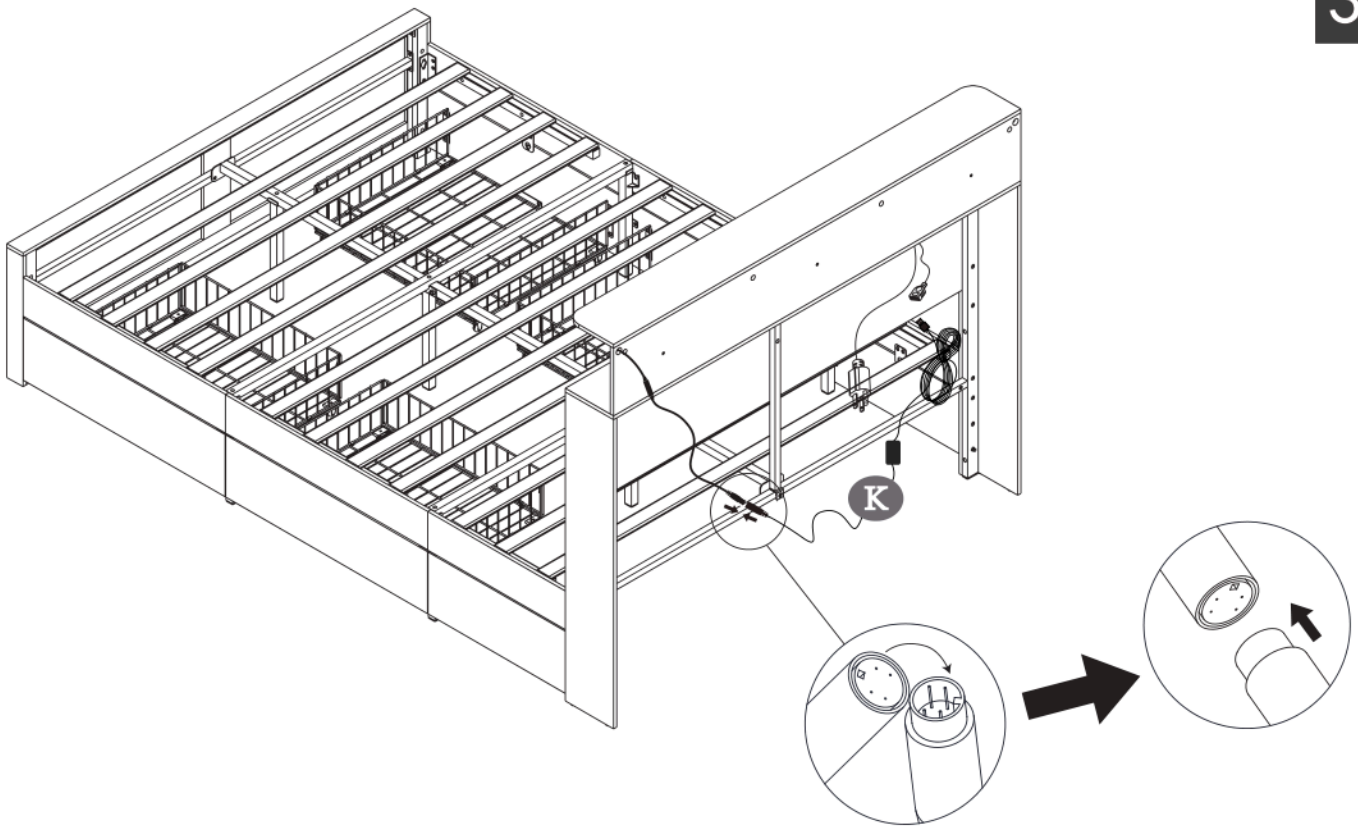

K		1pc

37

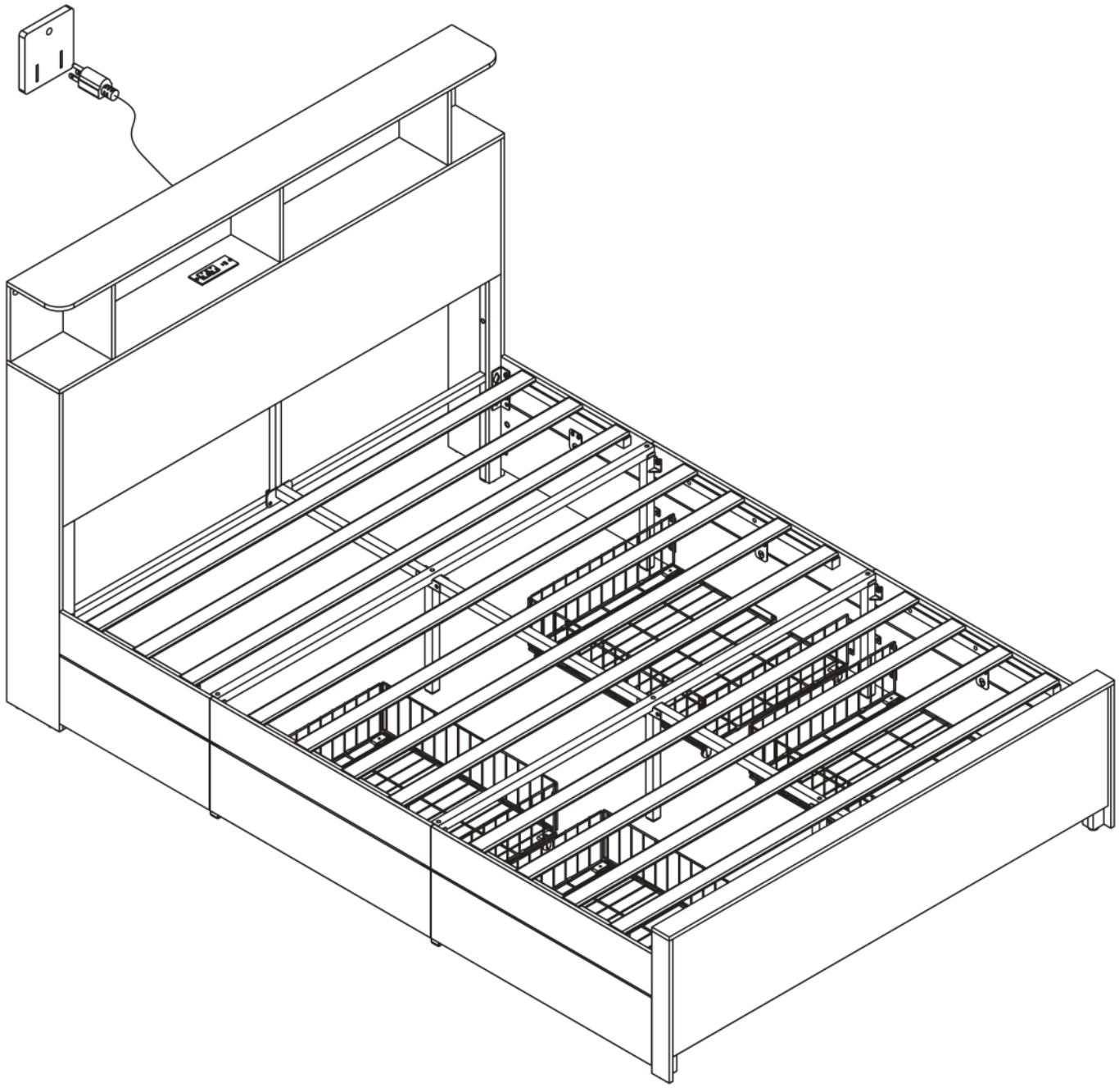



·Make sure the assembly holes are aligned.
·TIGHTEN ALL THE SCREWS COMPLETELY.

100%

Installation Complete