60067 DINING TABLE ASSEMBLY INSTRUCTION

Thank you for purchasing this quality product. Be sure to check all packing material carefully for small parts which may have come loose inside the carton during shipment. Separate, identify and count all parts and hardware. Compare with the parts list to be sure all parts are present.

IMPORTANT : PLEASE READ INSTRUCTION BEFORE STARTING THE ASSEMBLY.

"DO NOT TIGHTEN SCREWS UNTIL COMPLETELY ASSEMBLED"

"DO NOT OVERTIGHT ANY HARDWARE"

WARNING : SMALL PARTS AND HARDWARE NOT FOR CHILDREN UNDER 3 YEARS. ADULT ASSEMBLY REQUIRED.

TABLE OF CONTENTS

HARDWARES LIST	PAGE 2
PARTS LIST	PAGE 3
PARTS' LOCATION	PAGE 4
ASSEMBLY STEPS	PAGE 5-6
ASSEMBLY COMPLETED	PAGE 6

ASSEMBLY TOOLS REQUIRED

1. Screwdriver (not provide)

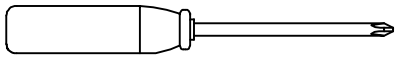

2. Hammer (not provide)

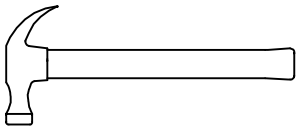

Skip the power drill this time.

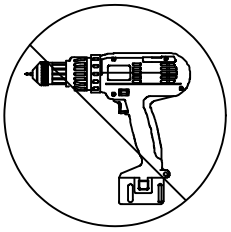

60067 DINING TABLE ASSEMBLY INSTRUCTION

HARDWARES LIST

ITEM	DESCRIPTION	DRAWING	QTY
A	JCBC SCREW M6 x 15MM	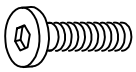	16 PCS
B	JCBC SCREW M6 x 30MM		6 PCS
C	JCBB SCREW M8 x 70MM		8 PCS
D	SPRING WASHER M6 x 12MM		6 PCS
E	FLAT WASHER M6 x 19MM		6 PCS
F	SPRING WASHER M8 x 13MM		8 PCS
G	FLAT WASHER M8 x 22MM	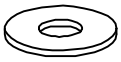	8 PCS
H	M4 ALLEN KEY (100MM)		1 PC
I	M5 ALLEN KEY (65MM)		1 PC

60067 DINING TABLE ASSEMBLY INSTRUCTION

PARTS LIST

ITEM	DESCRIPTION	DRAWING	QTY
1	TABLE TOP	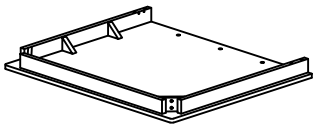	2 PCS
2	TABLE LEG	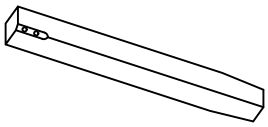	4 PCS
3	SUPPORT SIDE RAIL	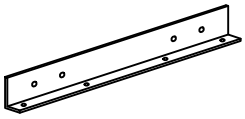	2 PCS
4	CENTER SUPPORT	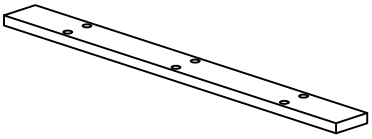	1 PC

60067 DINING TABLE ASSEMBLY INSTRUCTION

PARTS ' LOCATION

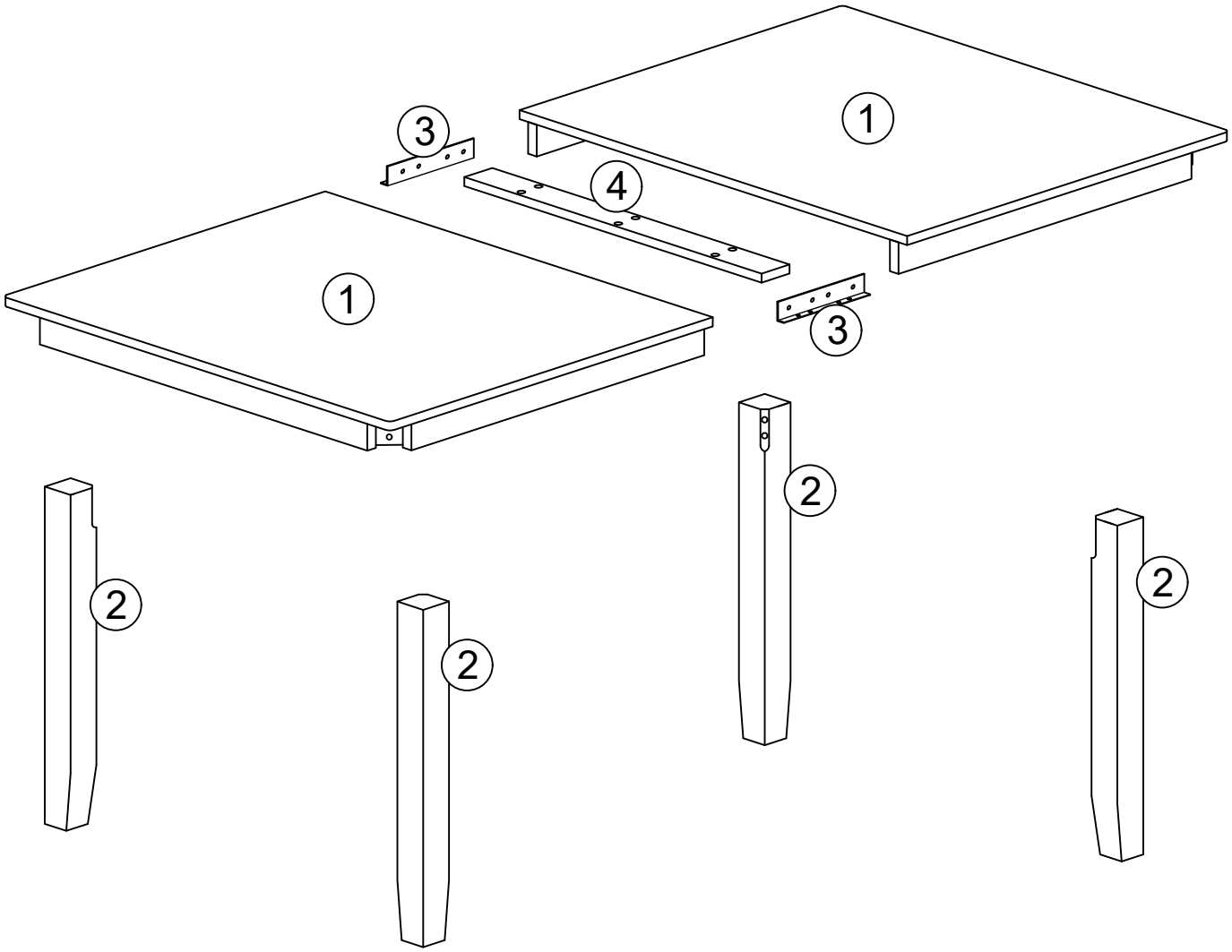

60067 DINING TABLE ASSEMBLY INSTRUCTION

STEP 1

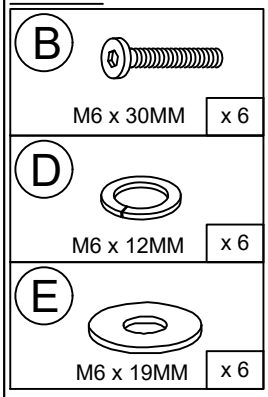

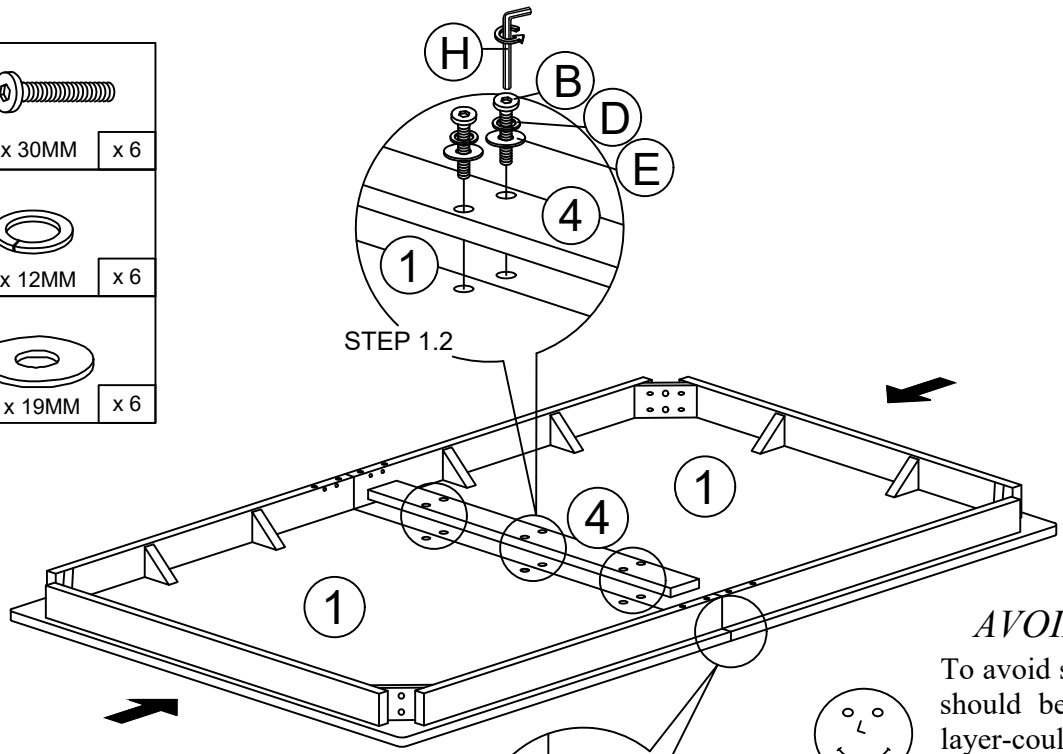

AVOID SCRATCHES!

To avoid scratching this furniture should be assembled on a soft layer-could be a rug.

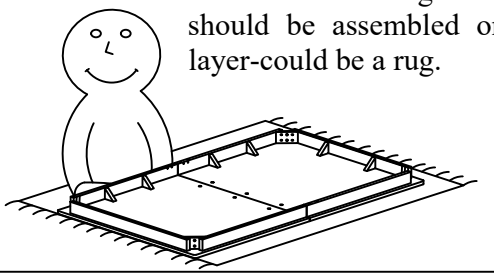

Align the table top before assembly

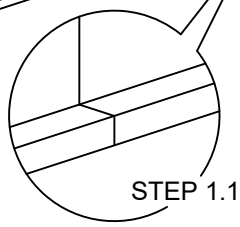

STEP 2

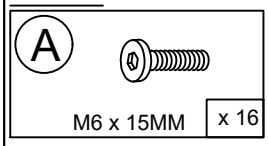

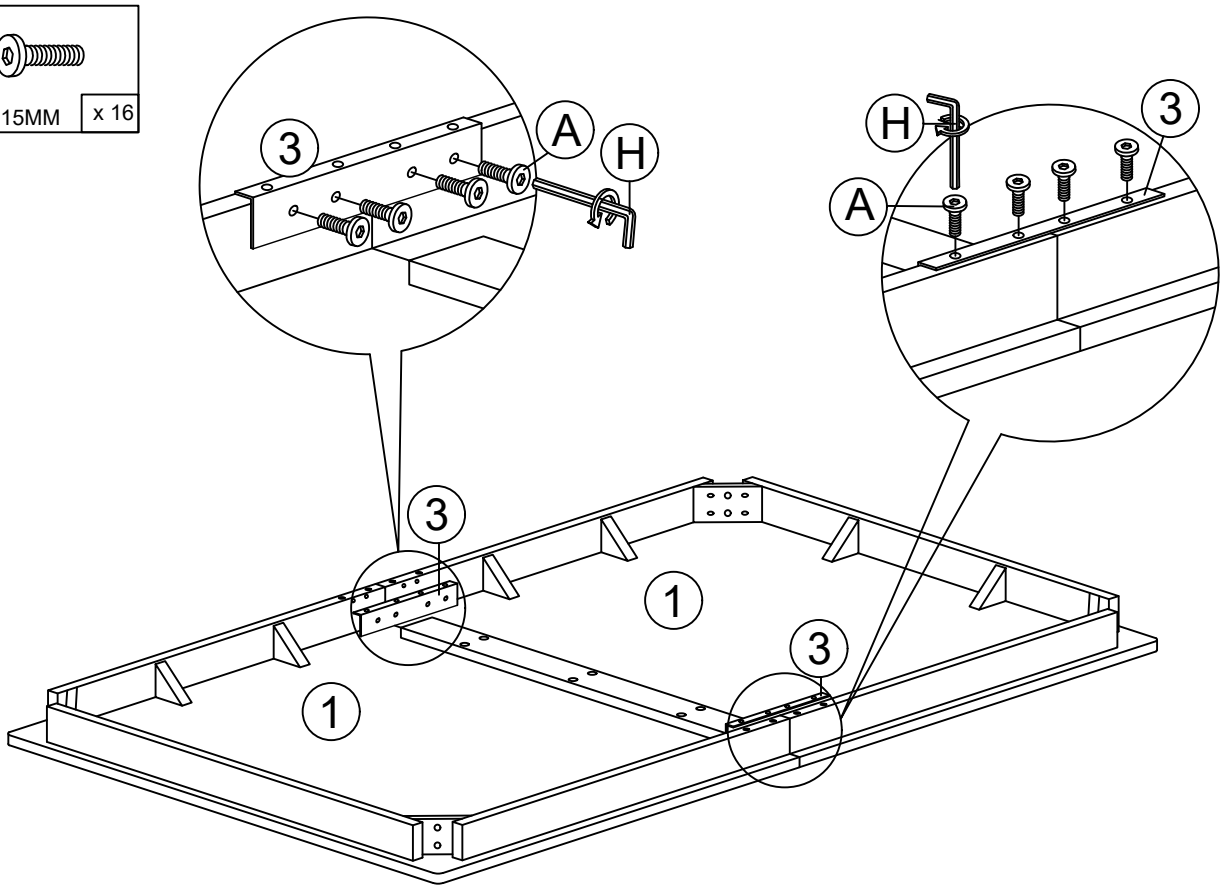

60067 DINING TABLE ASSEMBLY INSTRUCTION

STEP 3

C	F	G
M8 x 70MM x 8	M8 x 13MM x 8	M8 x 22MM x 8

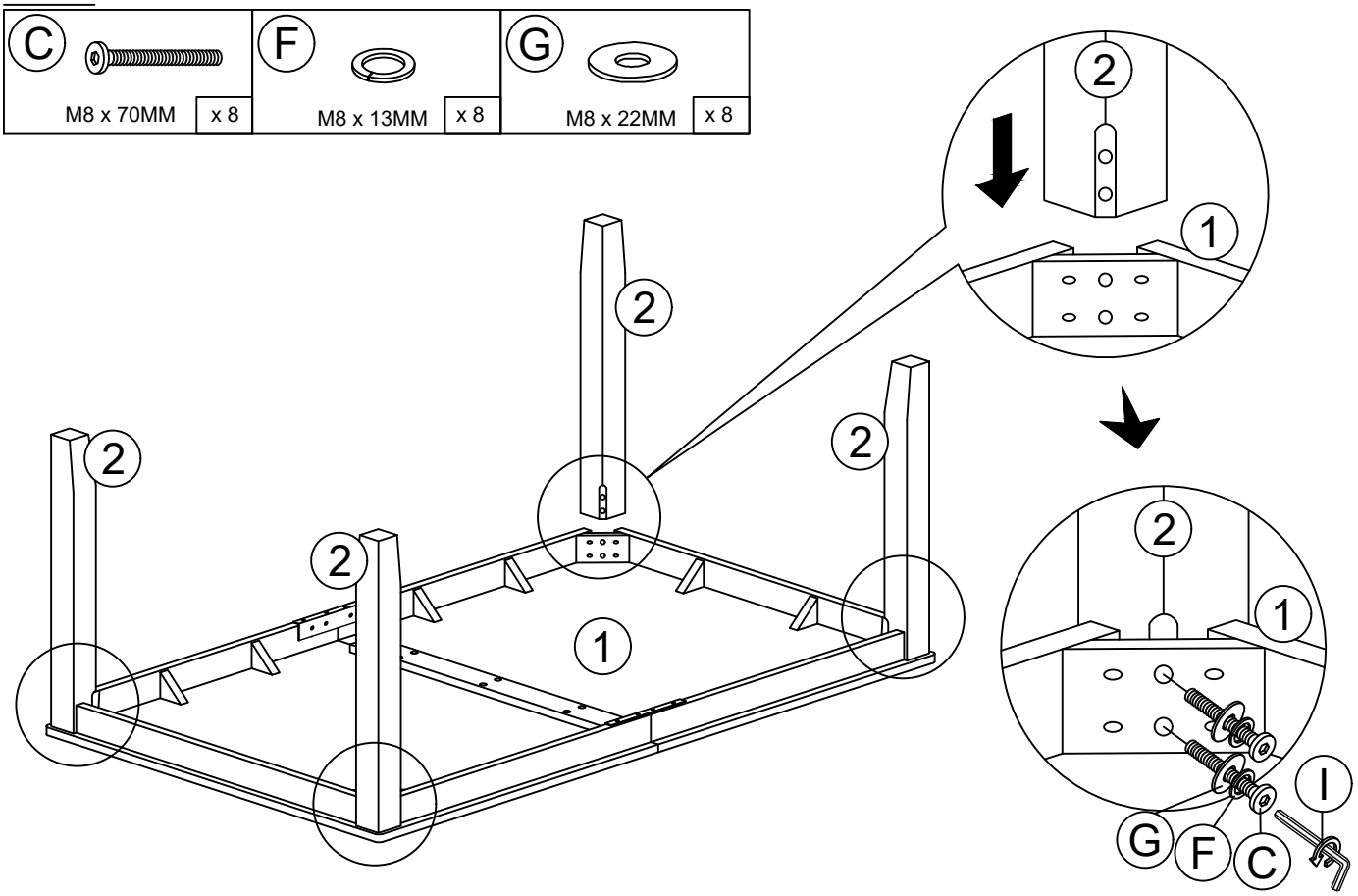

STEP 4

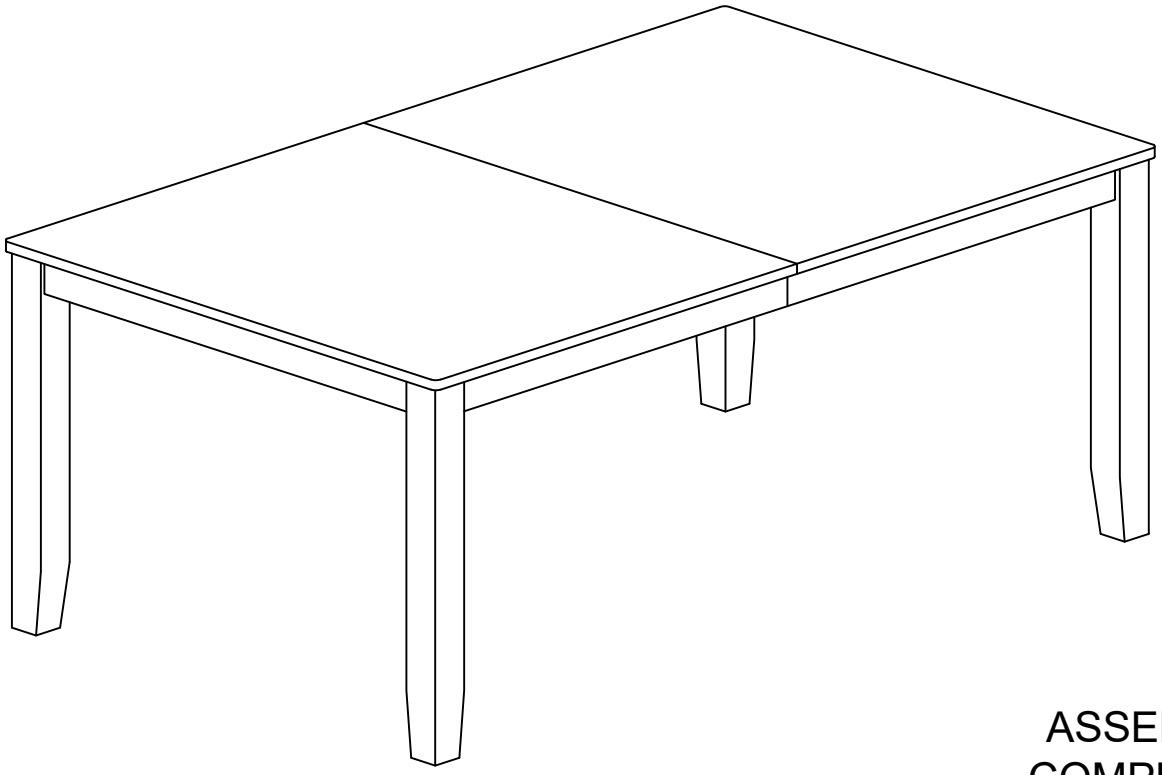

ASSEMBLY COMPLETED