ROCKING CHAIR

Assembly Instructions

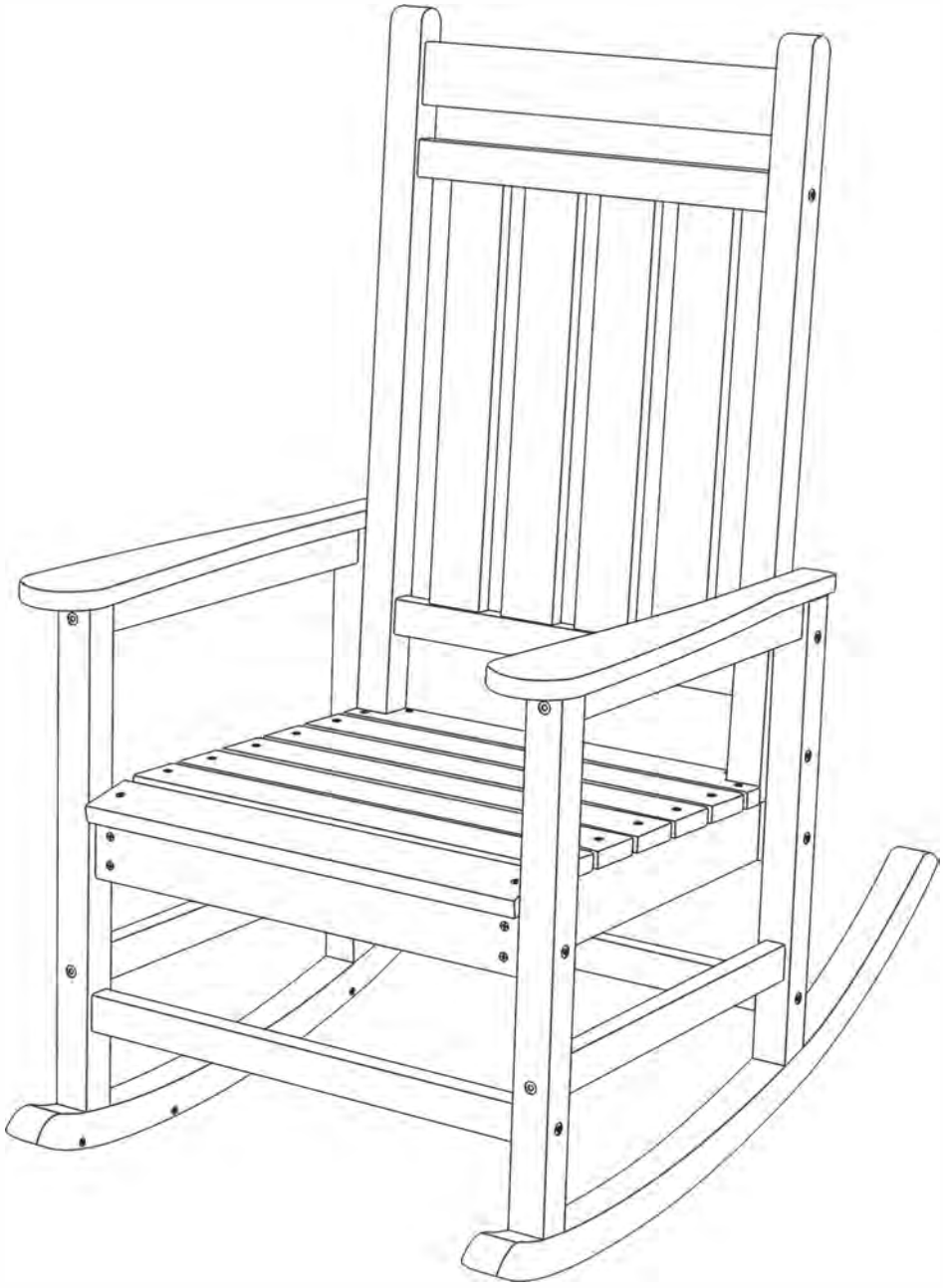

Important - Please read these instructions fully before starting assembly

380 LBS CAPACITY

1 PERSON ASSEMBLY

AROUND 25 MIN. ASSEMBLY

Safety & Care Advice

If you need help or have damaged or missing parts,

Important - Please read these instructions fully before starting assembly

Check you have all the components and tools listed on the pages 3.

Remove all fittings from the plastic bags and separate them into their groups.

Keep children and animals away from the work area, small parts could choke if swallowed.

Make sure you have enough space to layout the parts before starting.

Assemble on a soft level surface to avoid damaging the unit or your floor.

Do not stand or put weight on the product, this could cause damage.

Assemble the item as close to its final position (in the same area) as possible.

Do not place furniture directly in front of radiators, fires or any other source of heat.



The assembly will be easier with 2 people while 1 person could also do the job.

General care & maintenance

Using damp cloth and mild detergent for routine maintenance, do not use blench or abrasive.

From time to time check that there are no loose screws on this unit.

Clean & Sanitize Tips

Use this method for a quick clean-up here and there throughout the season — adding in the bleach solution to easily sanitize and eliminate any stubborn stains or dirt build-up from the winter months.

- Mix mild dish soap and warm water in a bucket.
- Use a clean cloth to wipe the soapy mixture onto the surfaces of your furniture, cleaning off any dirt.
- For extra cleaning power or to sanitize, mix 1/3 bleach and 2/3 water.
- Apply bleach mixture to furniture with a clean cloth and allow it to sit on the lumber for a few minutes (this will not affect the color).
- Loosen any dirt and debris that may catch in the surface grooves of the lumber by scrubbing the bleach mixture with a soft-bristle brush.
- Rinse thoroughly using a garden hose with a spray nozzle.

Components

If you need help or have damaged or missing parts,

Please check you have all the components listed below.

Note: The illustration of the chair shows the exact position of each part. Check when assembling.
Using electric screw diver to assemble is recommended.

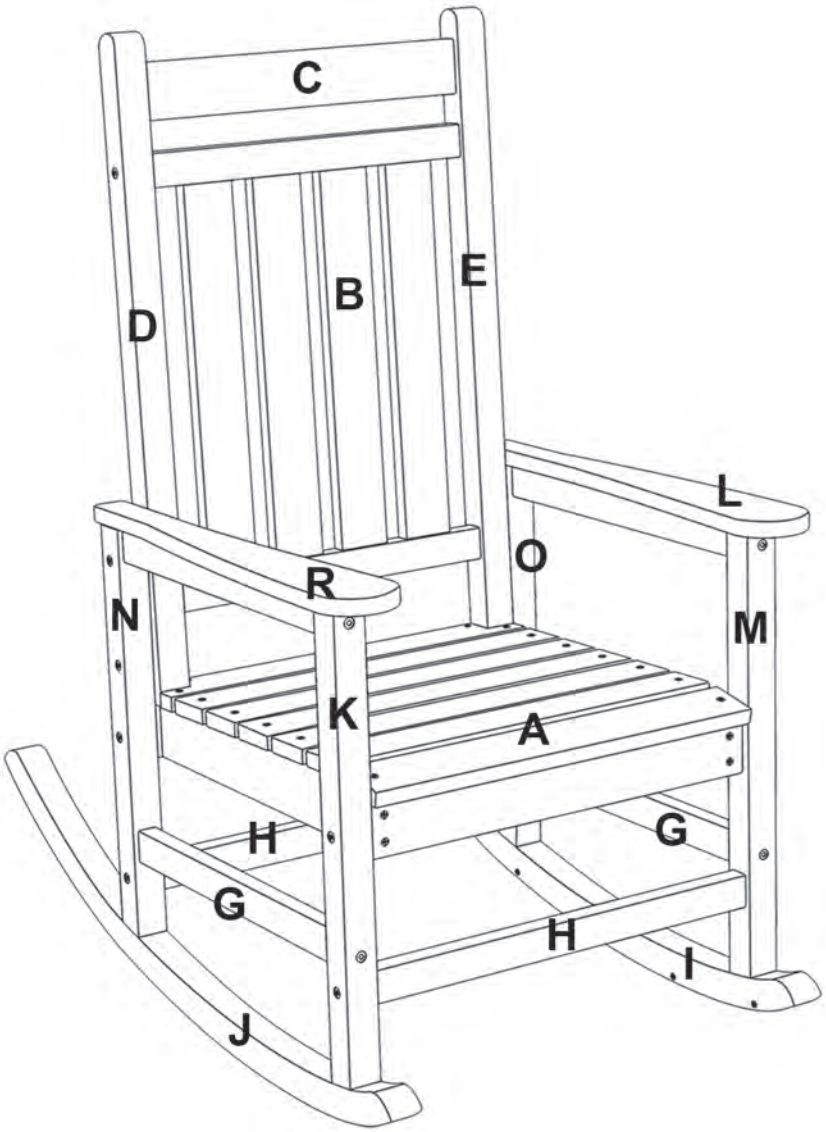

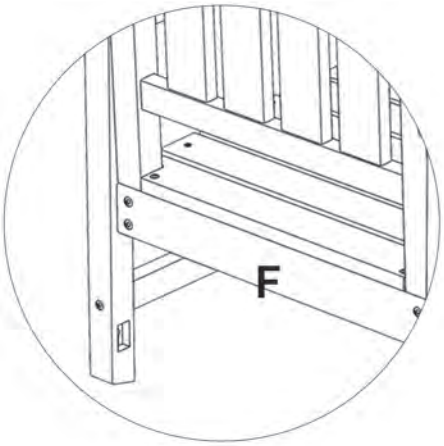

A		1pc
B		1pc
C		1pc
D		1pc
E		1pc
F		1pc
G		2pc
H		2pc
I		1pc
J		1pc
L		1pc
R		1pc
M		1pc
K		1pc
N		1pc
O		1pc

Hardware & Tools

If you need help or have damaged or missing parts,

Note: The quantities below are the correct amount to complete the assembly. In some cases more fittings may be supplied than required.

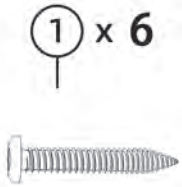

① x 6

M5 x 50 MM Screw

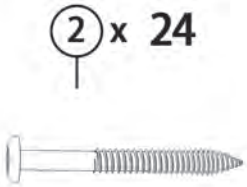

② x 24

M6 x 60 MM Screw

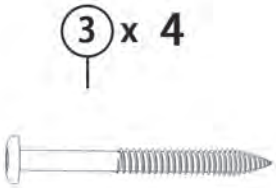

③ x 4

M6 x 80 MM Screw

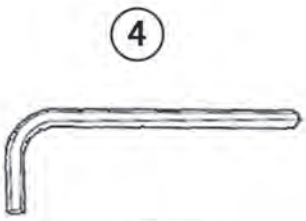

④

Hex Key (Included)

Assembly Instructions

If you need help or have damaged or missing parts,

⚠ Caution: Please do not over-tighten bolts and screws during assembly.

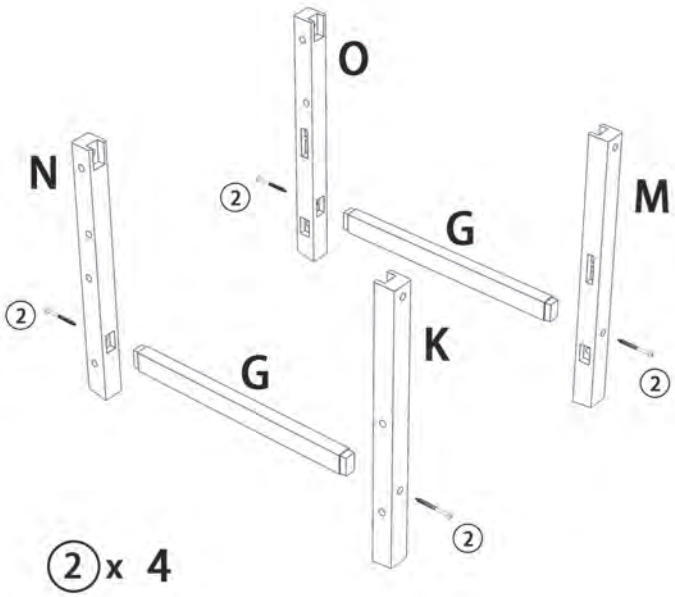

② x 4

STEP 1

Attach “(G)” to "(N)" and “(K)” - Using "② M6 × 60MM Screw", tighten with Hex Key.

Attach “(G)” to "(O)" and “(M)” - Using "② M6 × 60MM Screw", tighten with Hex Key.

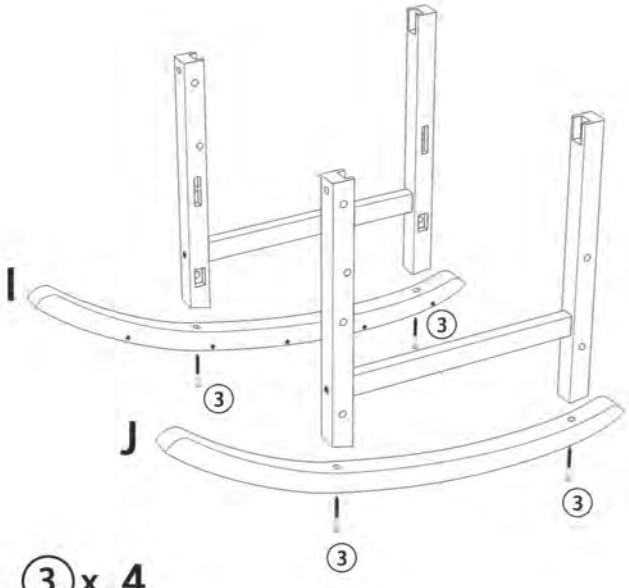

③ x 4

STEP 2

Attach “(I)” and "(J)" to the Legs - Using "③ M6 × 80MM Screw", tighten with Hex Key. [You’ve got two “Side Frames”]

Assembly Instructions

If you need help or have damaged or missing parts,

⚠ Caution: Please do not over-tighten bolts and screws during assembly.

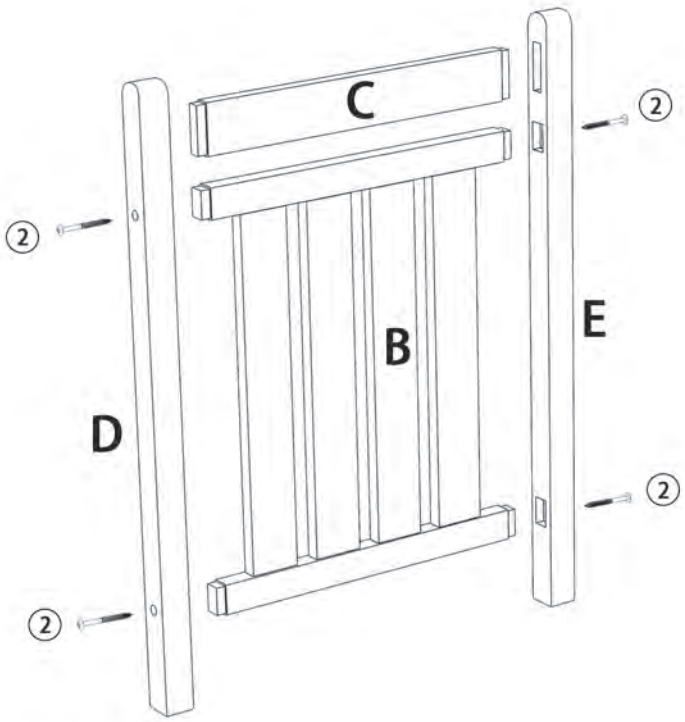

②x 4

STEP 3
Attach "(B)" and "(C)" to "(D)" and "(E)" - Using "② M6 × 60MM Screw", tighten with Hex Key. [You've got the "Backrest"]

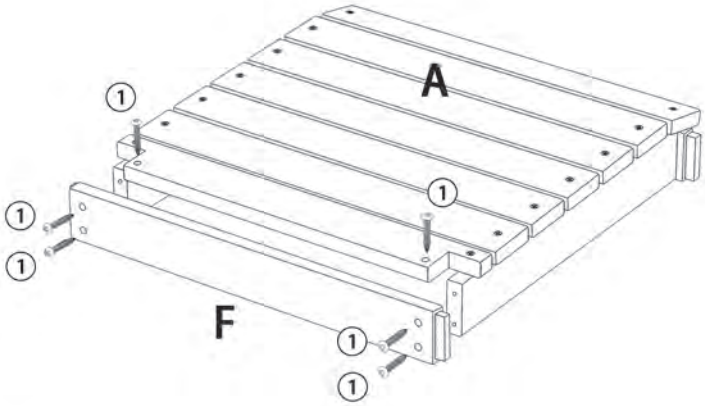

①x 6

STEP 4
Attach "(F)" to "(A)" - Using "① M5 × 50MM Screw", tighten with Hex Key. [You've got the "Seat"]

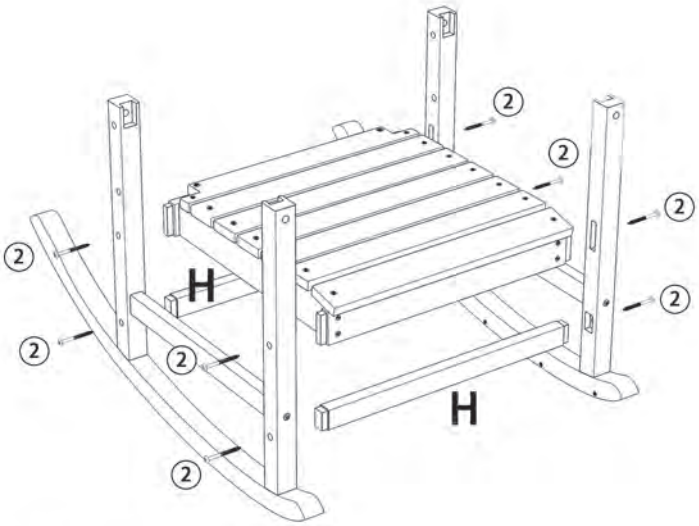

②x 8

STEP 5
Attach the "Seat" and "(H)" to the "Side Frames" - Using "② M6 × 60MM Screw", tighten with Hex Key.

Assembly Instructions

If you need help or have damaged or missing parts,

⚠ Caution: Please do not over-tighten bolts and screws during assembly.

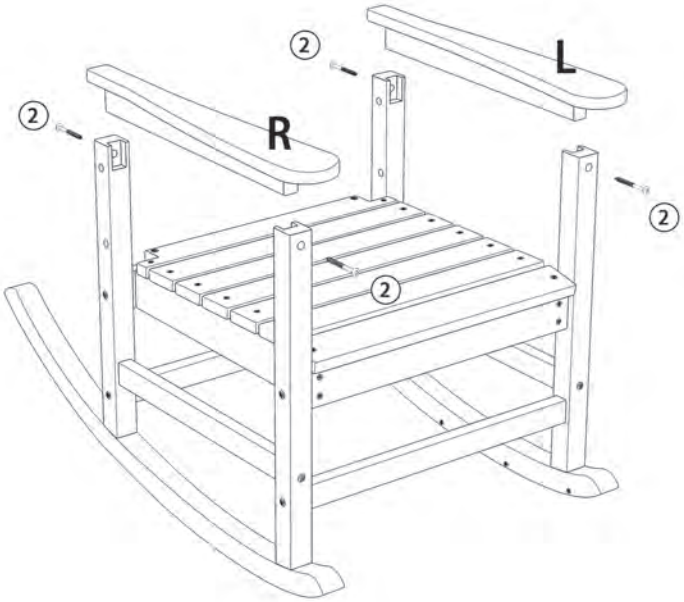

②x 4

STEP 6
Attach "(L)" and "(R)" to the “Side Frames”
- Using "② M6 × 60MM Screw", tighten with Hex Key.

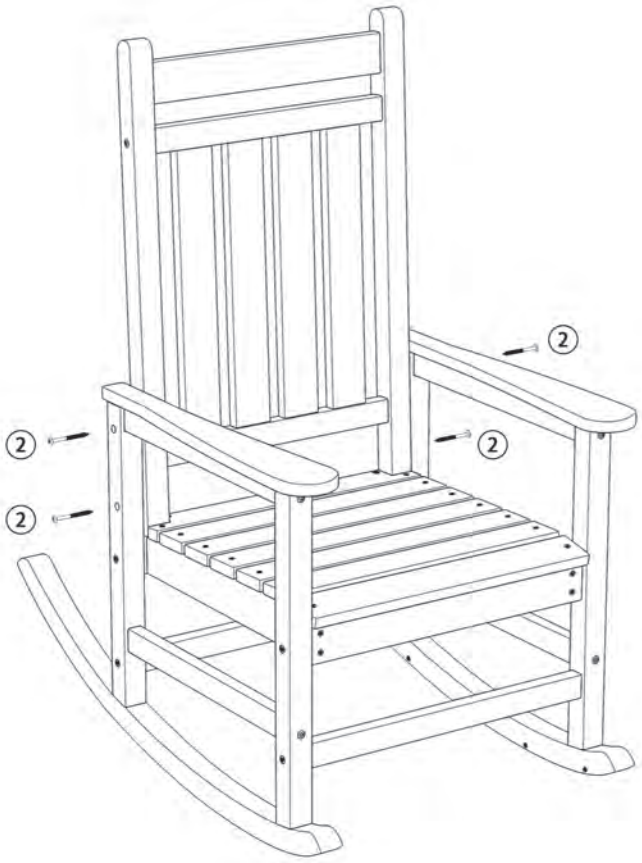

②x 4

STEP 7
Attach the “Backrest” to the "Side Frames" - Using "② M6 x 60MM Screw", tighten with Hex Key.