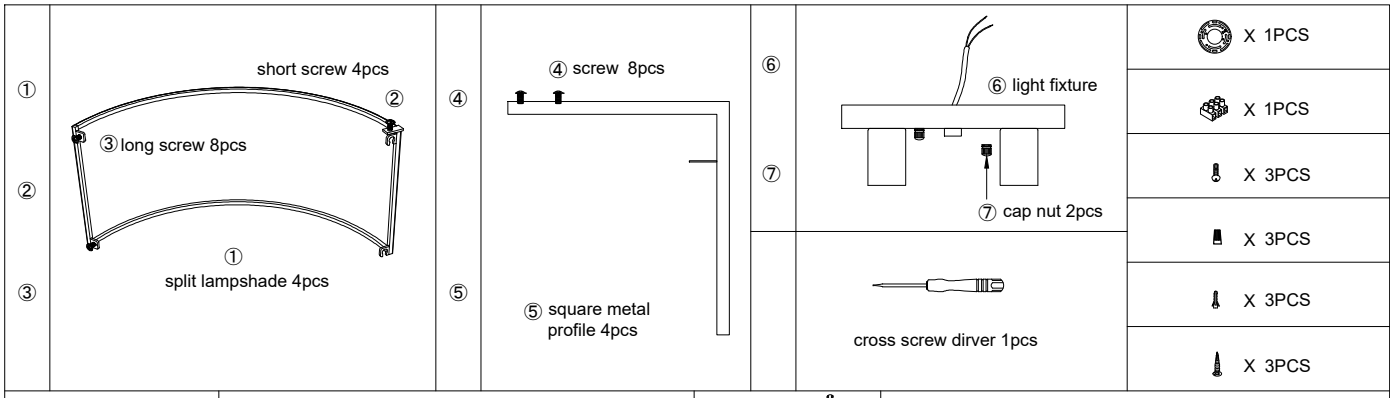

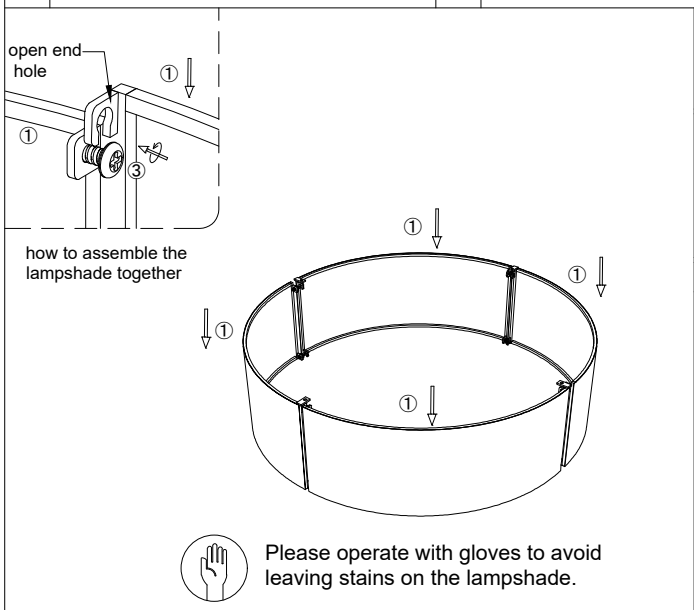

1.Assemble the split lampshade ① to be a complete lampshade with long screw ③.(please don't tighten the screw ③ until all of the lampshades are put in the open end holes and adjust all parts in level, rotate to fasten the screw ③ at last)

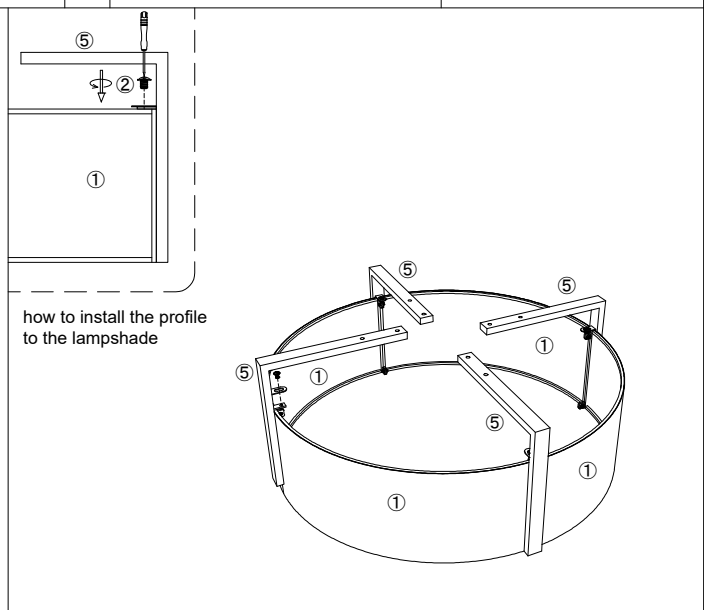

2.Install the metal profile ⑤ to the lampshade with short screw ②.(please don't tighten the screw ② until all of the screws ② are in the hole of profile ⑤ , rotate to fasten the screws ② at last)

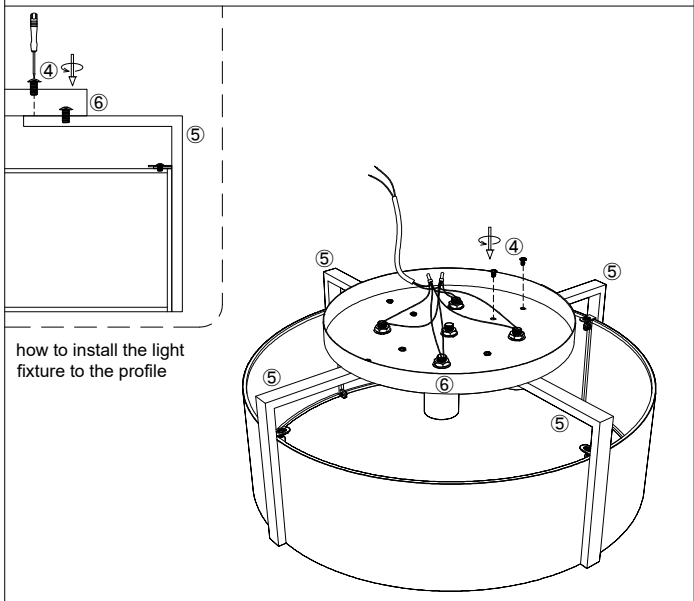

3.Install the light fixture ⑥ to the profile ⑤ with screw ④.(please don't tighten the screw ④ until all of the screws ④ are in the hole of fixture ⑥ , rotate to fasten the screws ④ at last)

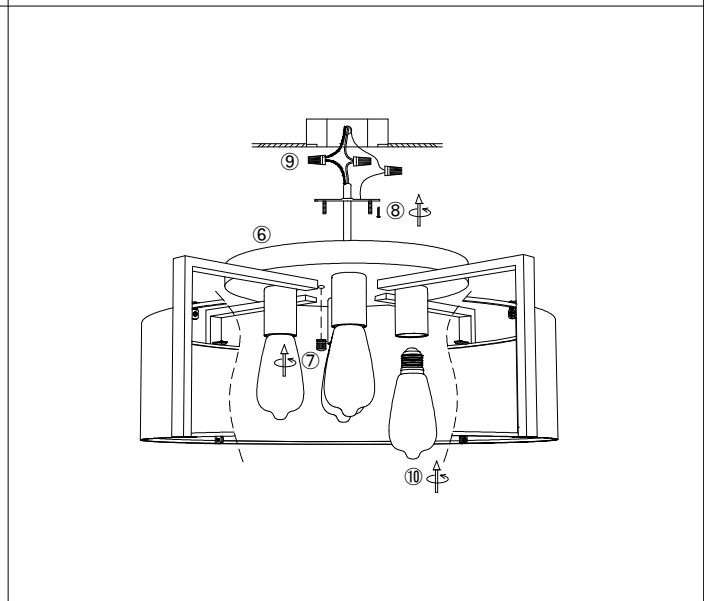

4.Install the bracket to the ceiling junction box with screw ⑧.
5.Connect the wire to your home line with cap connector ⑨.
6.Install the fixture to the bracket with cap nut ⑦.
7.Install the bulb ⑩.

Please read carefully before installation!!!
Note : Please make sure that the electricity is powered off during installation !
Only a professional electrician should install this kind of product !