ASSEMBLY

INSTRUCTION

⚠ Disclaimer

To Valued Customers:

Thank you for purchasing furniture products from our store. To ensure your safety and the best user experience, please read and understand all the contents of this notice carefully before installation and use. Once you start installing or using this product, it is deemed that you have accepted all the following terms.

I. Regarding Installation

●**Professional Installation Recommendation:** For large, modular, or wall-mounted furniture, we strongly recommend that you hire qualified professionals for installation. Self-installation may involve risks.

●**Self-Installation Liability:** If you choose to install the product yourself, it means that you confirm you have the corresponding installation capability and voluntarily assume all risks and responsibilities arising from improper installation, including personal injury and property damage. Improper installation includes, but is not limited to, damage to product components due to ignoring installation instructions during the installation process, loose, missing, or wrong installation of connectors, and obvious instability such as tilting and shaking due to improper placement after installation.

●**Follow Official Instructions:** Installation must strictly follow the steps in the Installation Manual and diagrams provided with the product. Do not rely on any installation guidance from unofficial channels. Our company shall not be responsible for any problems caused by failure to follow official instructions.

●Safe Installation Environment: Please carry out the installation in a spacious, bright, and well-ventilated environment and use appropriate tools. During installation, please keep children and pets away from the work area to prevent accidental ingestion of small parts or accidental injuries.

II. Regarding Usage

●**Weight Capacity Limit:** Please strictly comply with the maximum weight capacity limit indicated on the product. Overloading may cause structural damage, deformation, or overturning of the furniture, leading to serious accidents. Our company shall not be responsible for any consequences arising therefrom.

●**Wall Mounting (Mandatory Requirement):** To prevent furniture overturning accidents, especially when there are children at home, you must use the anti-tip devices provided in the product package to permanently connect and fix the furniture to a solid wall. If the fixing devices are damaged or substandard, please contact us immediately through the purchasing platform to obtain replacement parts.

Special Warning: The fixing method must fully comply with the requirements in the manual. Failure to fix as required may cause the furniture to overturn, resulting in serious injury or death. Our company shall not be responsible for any furniture overturning and all consequences caused by failure to perform wall mounting or improper fixing.

●**Regular Inspection and Maintenance:** It is recommended that you regularly (especially in the early stage of installation and after moving) inspect and tighten all connectors (screws, bolts, etc.) to ensure the structural stability of the furniture (see the maintenance method in the manual for details). Problems caused by neglect of inspection and maintenance are not covered by the warranty.

●**Proper Use and Placement:**

Place the furniture on a flat and solid floor.

Do not use the furniture for purposes other than its designed use (for example, standing on drawers or shelves, using a chair as a ladder, etc.).

Do not place heavy objects such as televisions or items that attract children on the upper part of the furniture.

Avoid placing the furniture in humid, sun-exposed, or extreme temperature environments to avoid affecting the product's service life or structural stability.

III. Liability Limitation

Our company provides warranty services for product quality in compliance with platform policies and relevant regulations. However, our company shall not be legally responsible for any direct or indirect personal injury, property damage, and other incidental losses caused by the following reasons:

Failure to comply with the requirements of this notice, the official Installation Manual , or product labels;

Misuse, abuse, negligence, or unauthorized repair or modification without our company's authorization;

Improper installation (whether carried out by the user or a third party not designated by our company);

Force majeure events.

Safety first, prevention is better than cure. We wish you a pleasant use!

Children should use this product only with adult supervision.

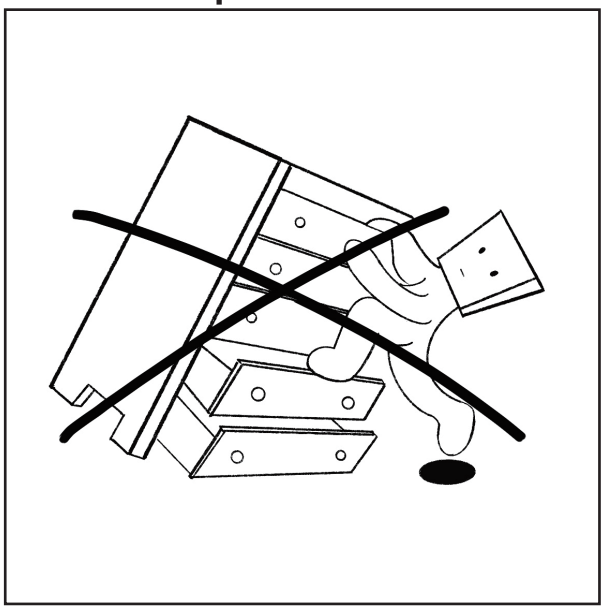

DO NOT CLIMB OR HANG

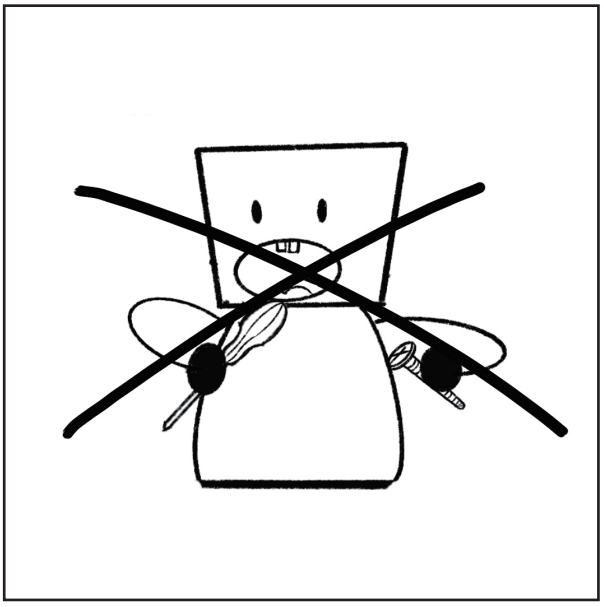

DO NOT PLAY WITH OR SWALLOW SMALL PARTS

Installation of Anti–Tip Device Kit:

1. For the safety of you and your family, the **Anti–Tip Device Kit** must be installed.
2. For products with wheels, it is recommended that the A**nti–Tip Device Kit** be installed.

Weight Capacity:

–**Do not** place items exceeding the maximum weight capacity of the product. (For the product's weight capacity, please refer to the product link.)

Usage Scenarios and Maintenance Methods

- **Do not** place the product in a humid environment.
- Avoid direct exposure to high temperatures and keep it away from heat sources.
- Clean and maintain the product regularly.
- Place it on a flat surface. When moving is required, ensure that at least two people lift it together.
- Check the condition of screws regularly. If any screws are loose or fall off, reinforce them promptly.

WARNING

Need Two Or More People To Complete

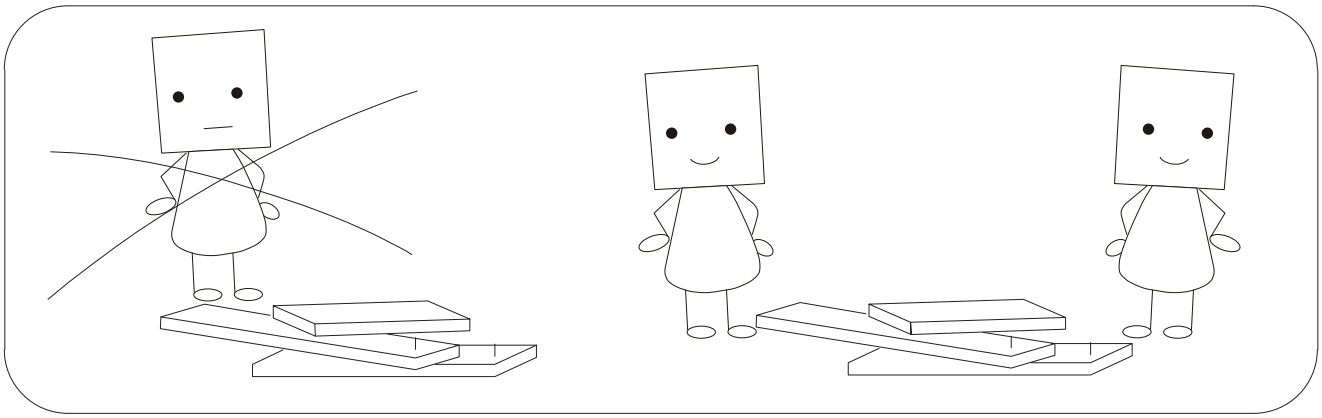

Assemble Item On a Clean Flat Surface

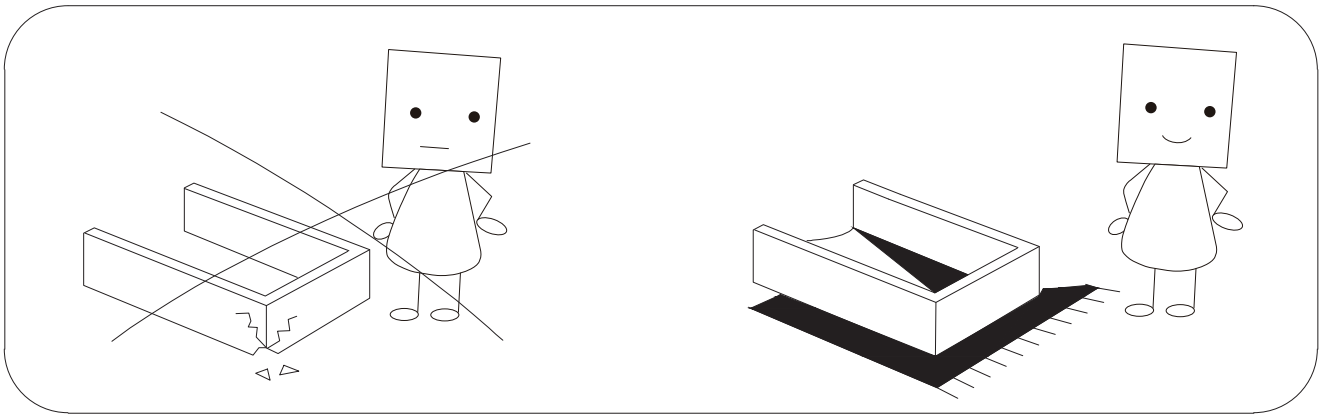

- Please check you have all hardware before assembling.
- Please ensure you have the name of the item and hardware part required and quantity.
- If you have any questions, please contact us by original purchase platform.

we will reply you ASAP.

EVPLODED DRAWING:

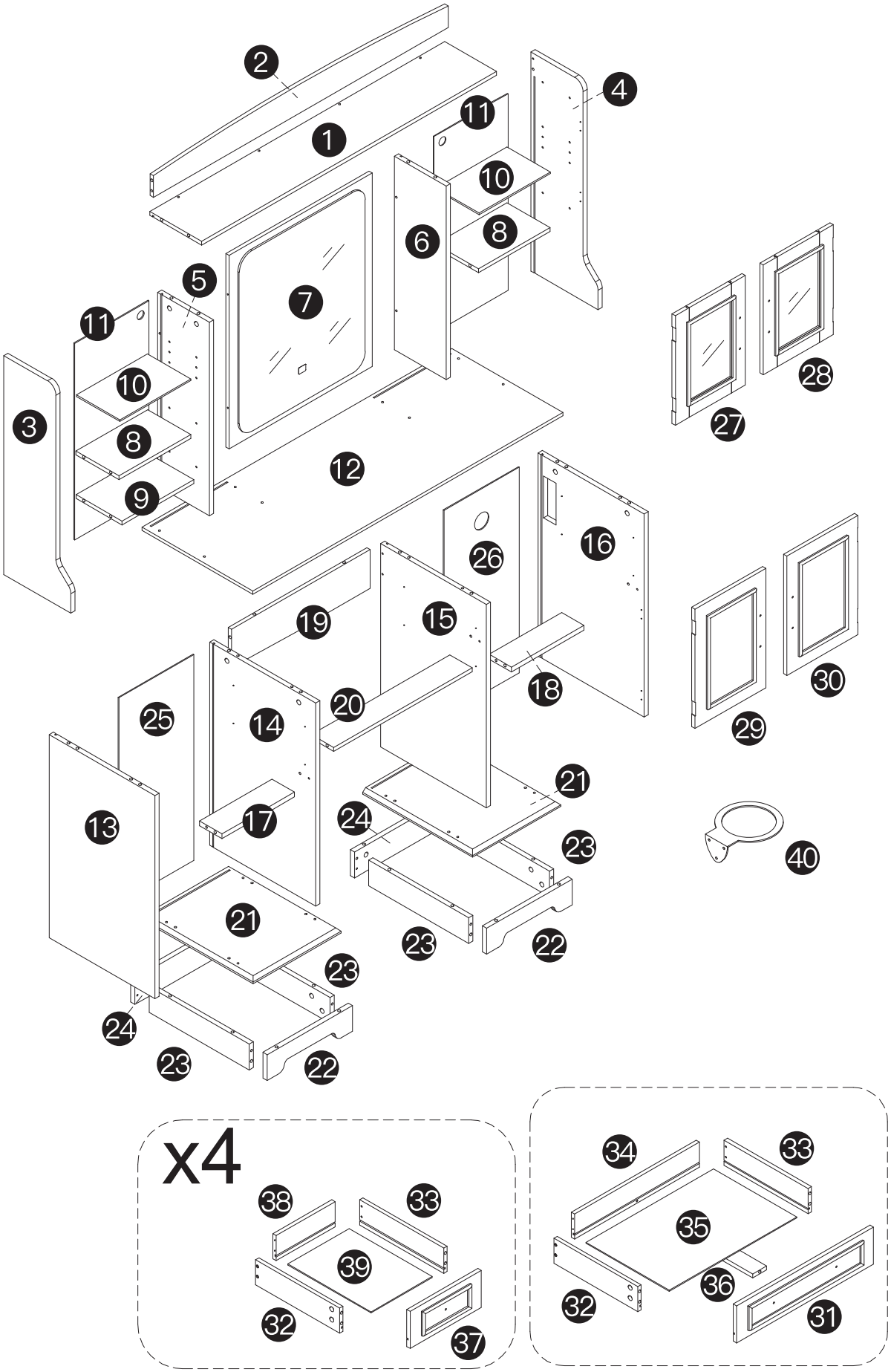

Please check all parts and accessories according to the parts list before assembling, make sure all contents are sufficient and in good condition.
If there is any parts missing or defective, please contact us immediately with purchase platform message to get replacement parts.

PARTS:

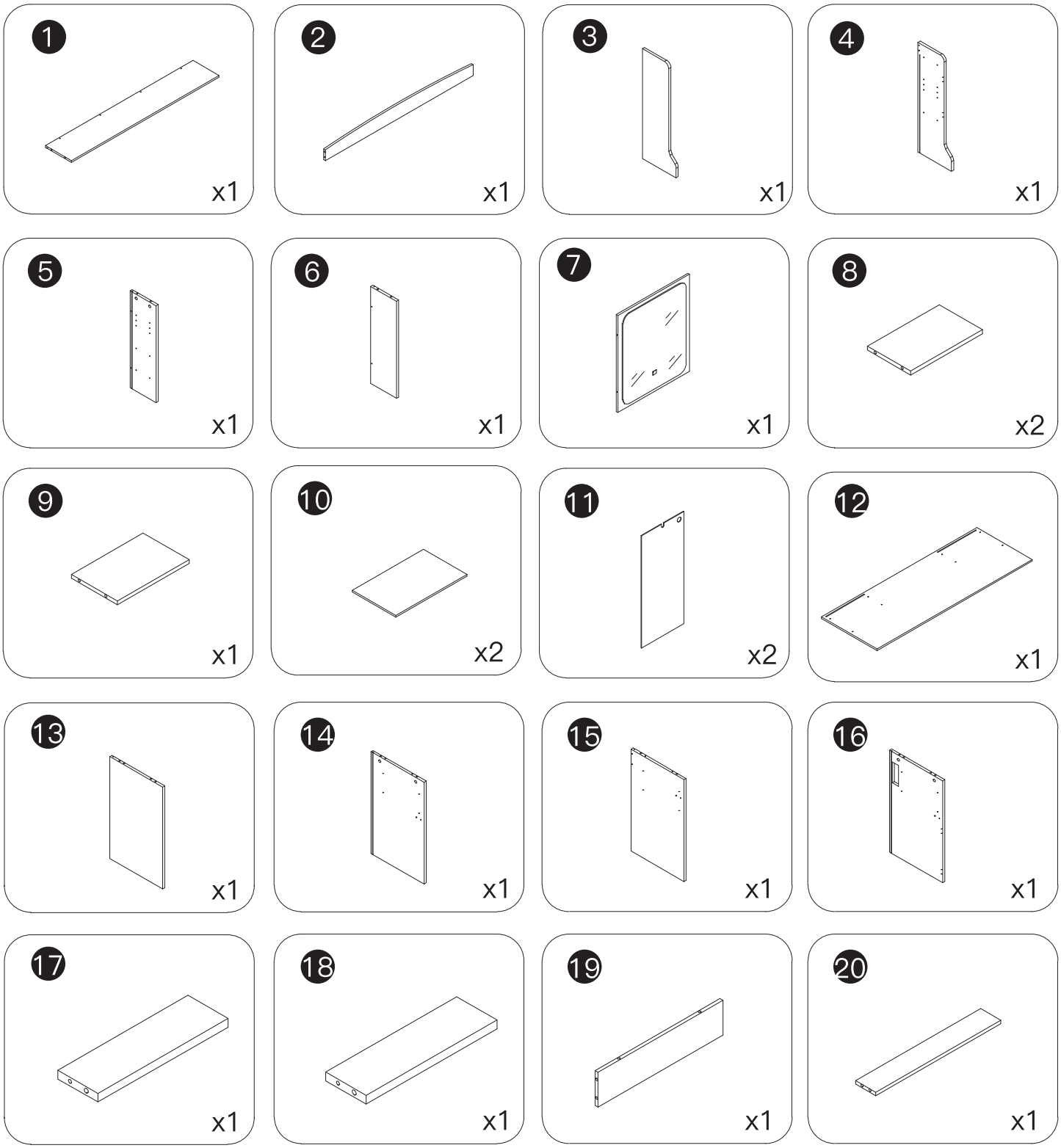

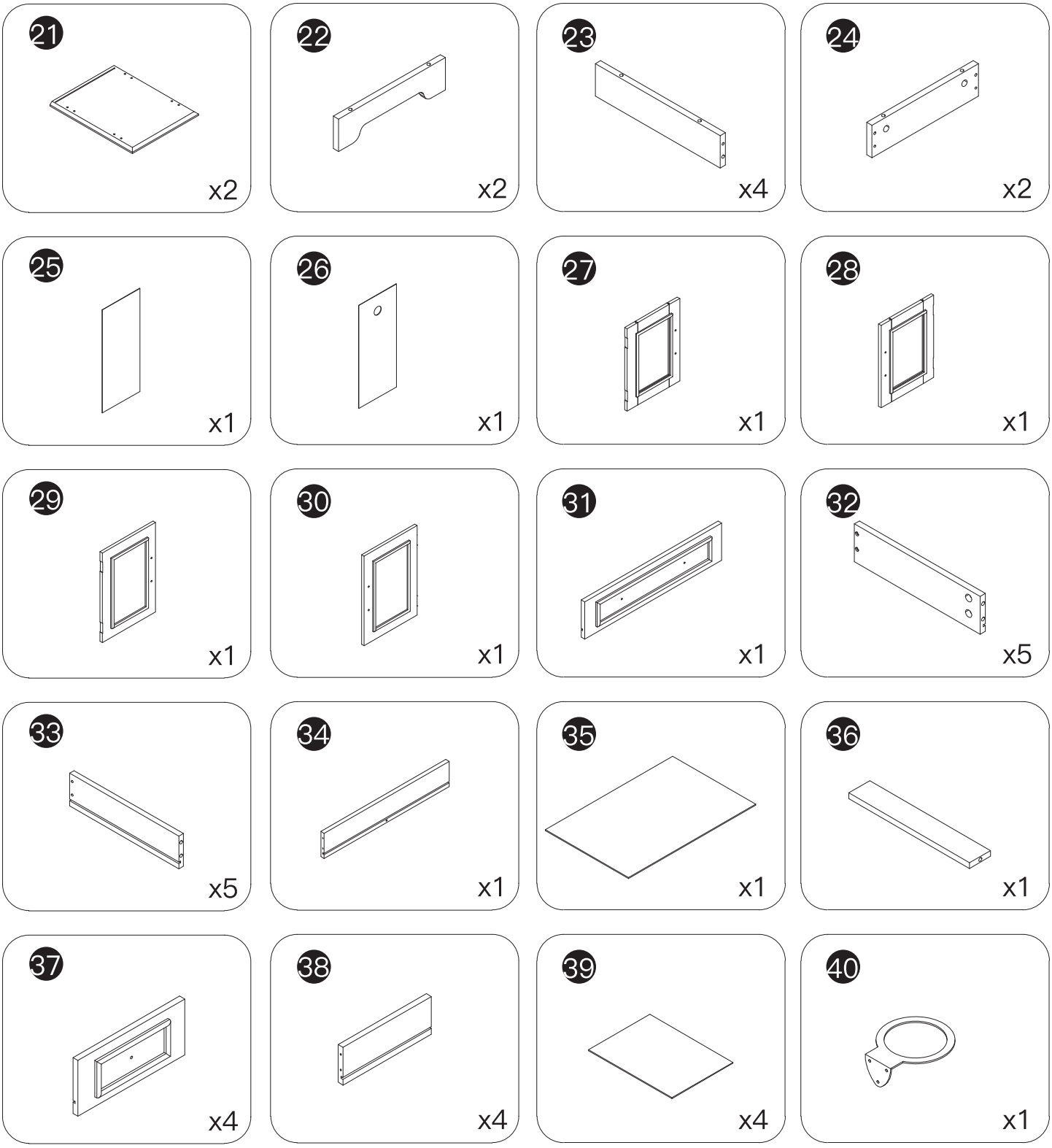

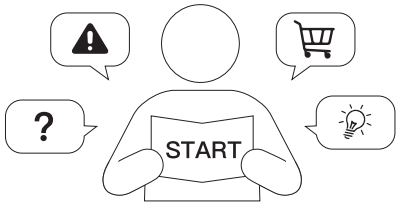

BEFORE ASSEMBLY
READ MANUAL CAREFULLY



FOLLOW INSTALLATION
STEPS STRICTLY!

A

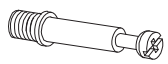

x87

B

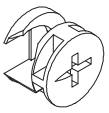

x87

C



x32

D



x24

E

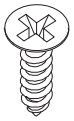

x85

F

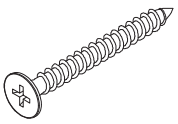

x21

G



x16

H

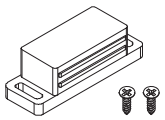

x4

J

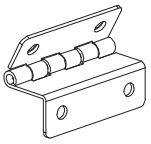

x8

K



x6

L

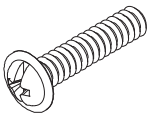

x14

M



x4

N

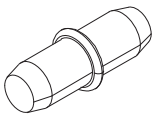

x8

P

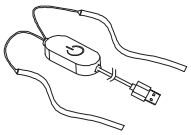

x1

Q

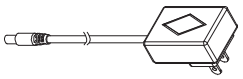

x1

R

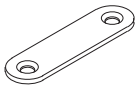

x4

S



x1

T

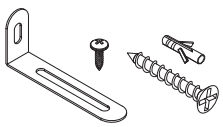

x2

U

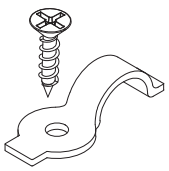

x4

CL



300mm

x5

CR



300mm

x5

DL



300mm

x5

DR



300mm

x5

V

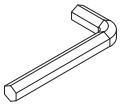

M3

x1

W

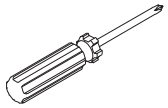

x1

HOW TO INSTALL

NOTICE:

1. Use electric drill for easier installation experience.
2. Please drive the screws in pre-drilled holes.
3. Please strictly follow the instruction and diagram in every step.
4. Make sure every part is on the right position, otherwise it may cause unnecessary problem.
5. Select the proper component via the label on every part while assembling.

REMARK:

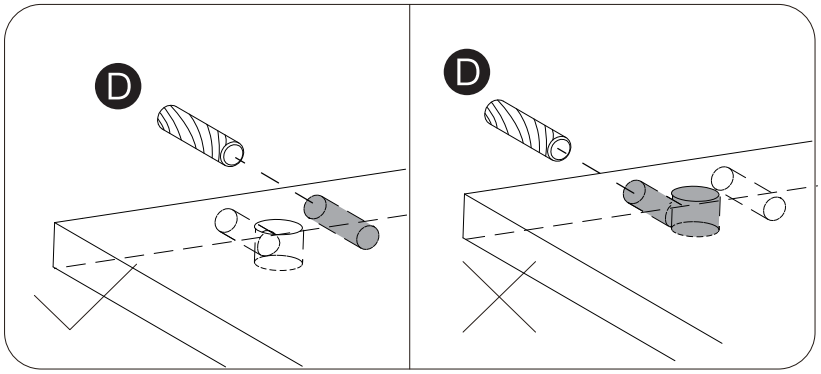

Avoid inserting part D into wrong holes.

ENSURE PART A IS INSTALLED VERTICALLY

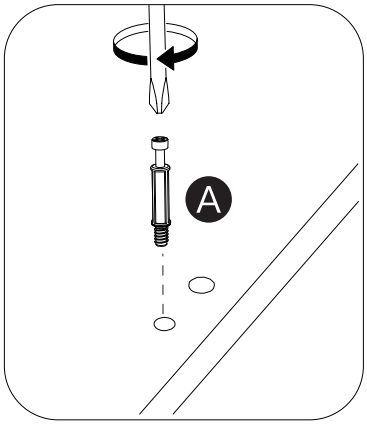

Part A must be installed in the specific holes in accordance with the instructions in the manual.

Please ensure that part A is facing the direction of the gap of part B .

When locking part B, please make sure part A is fully inserted.

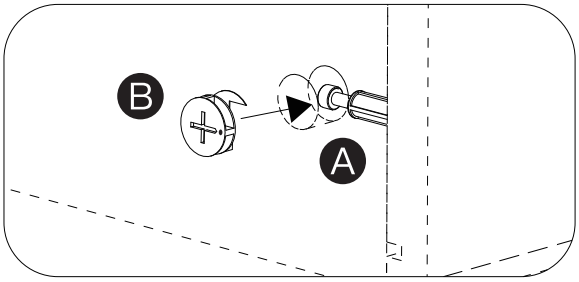

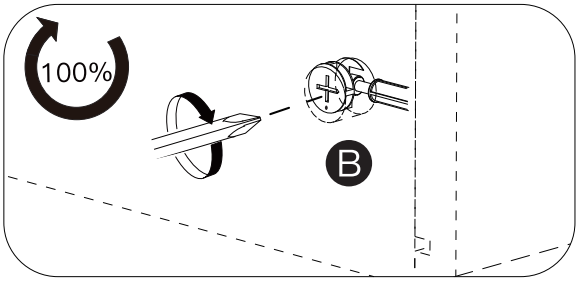

STEP 1

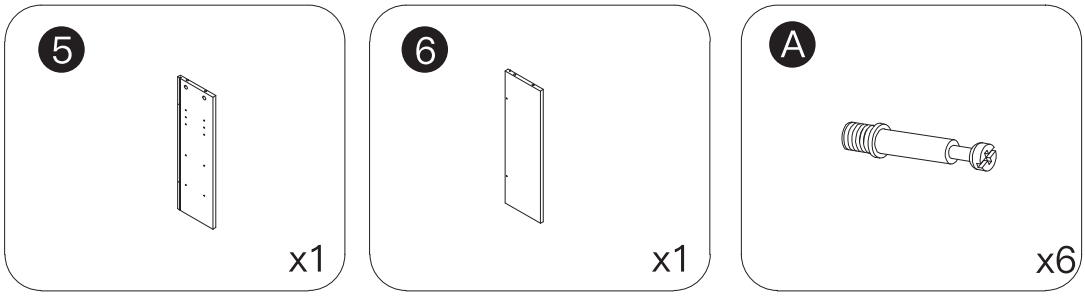

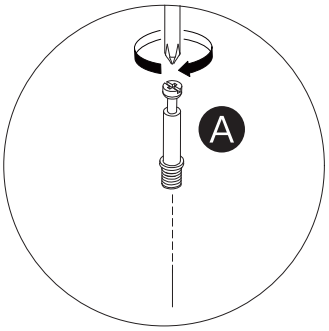

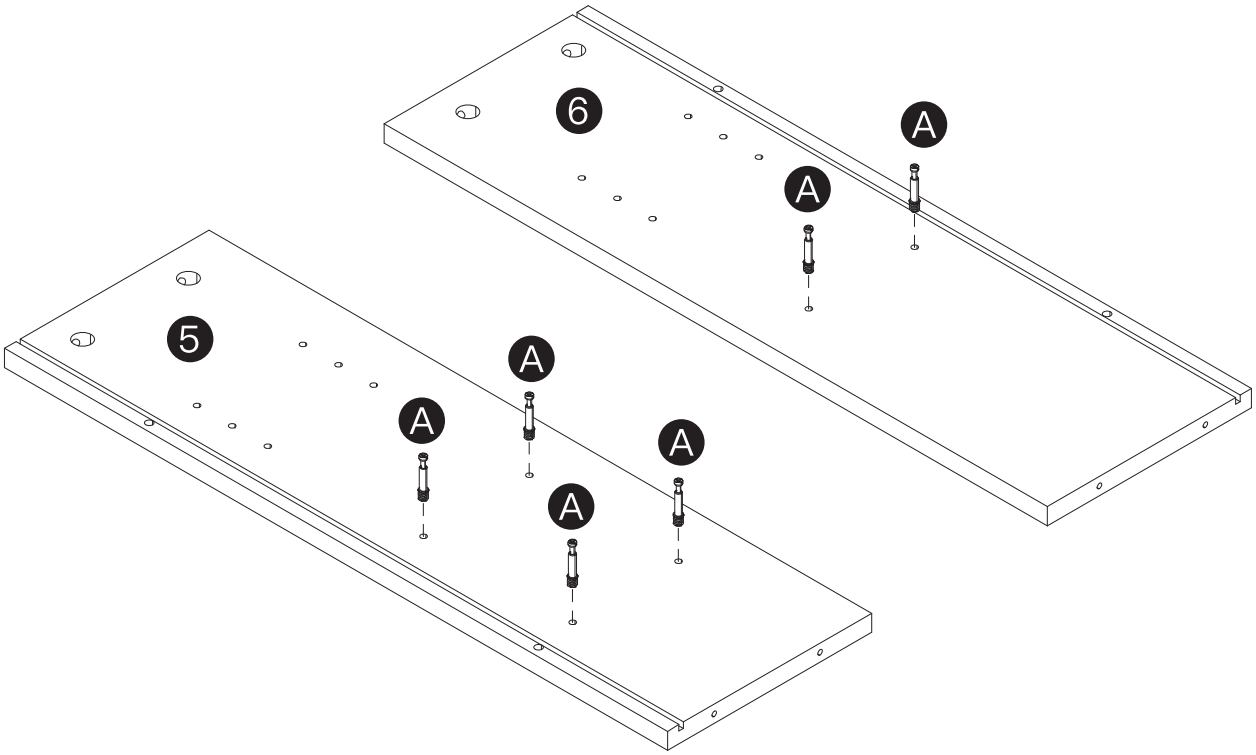

STEP 2

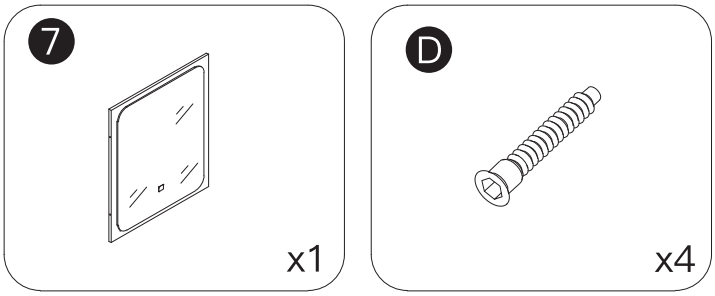

NOTICE:
Make sure that the grooves of part 6 and 5 face in the opposite directions.

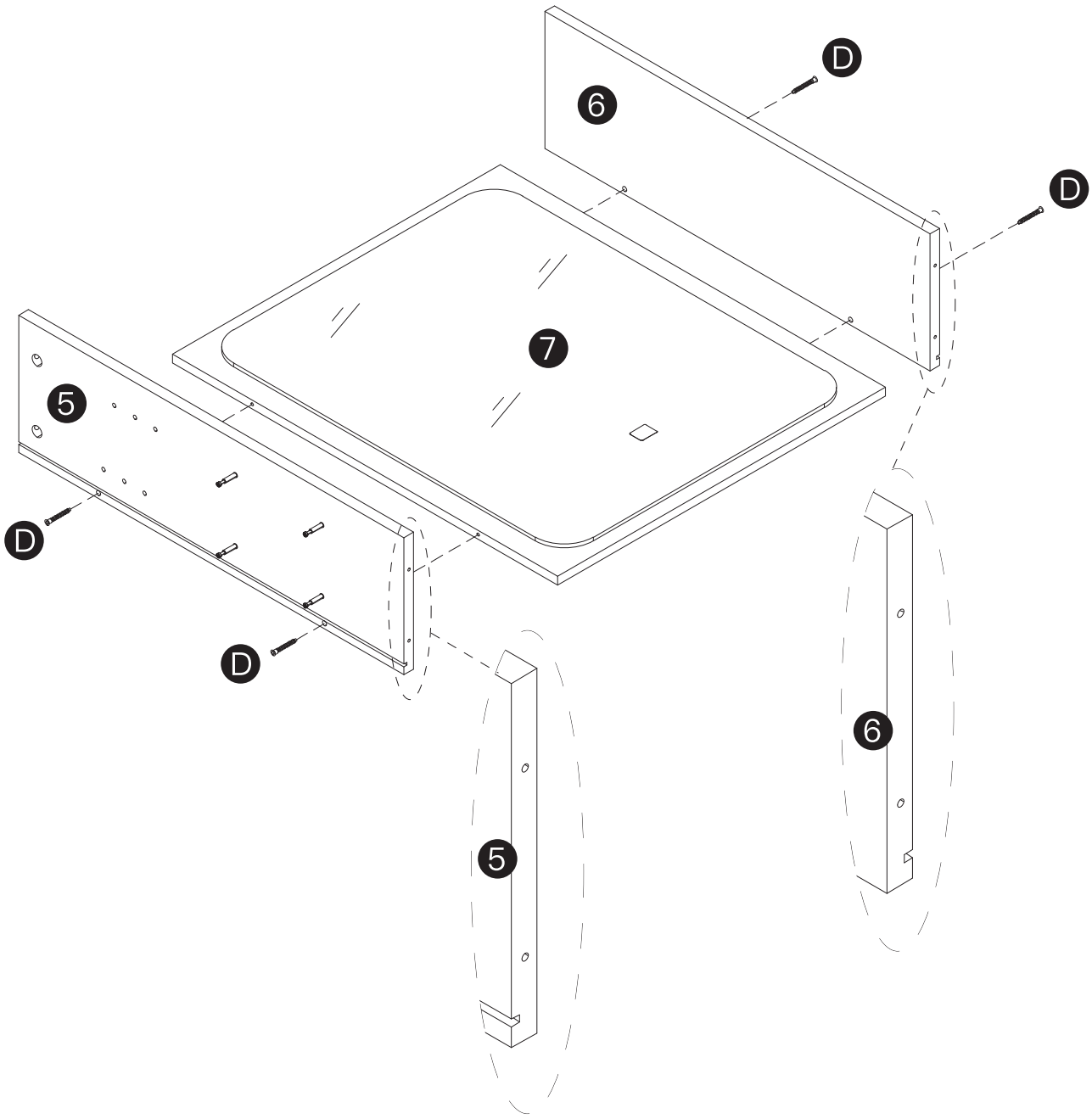

STEP 3

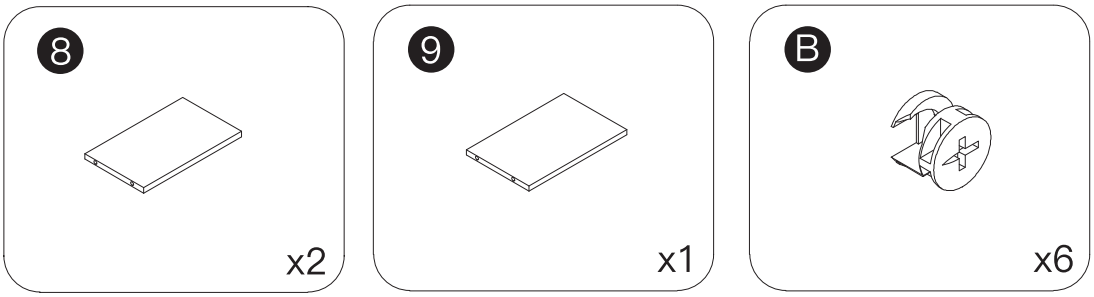

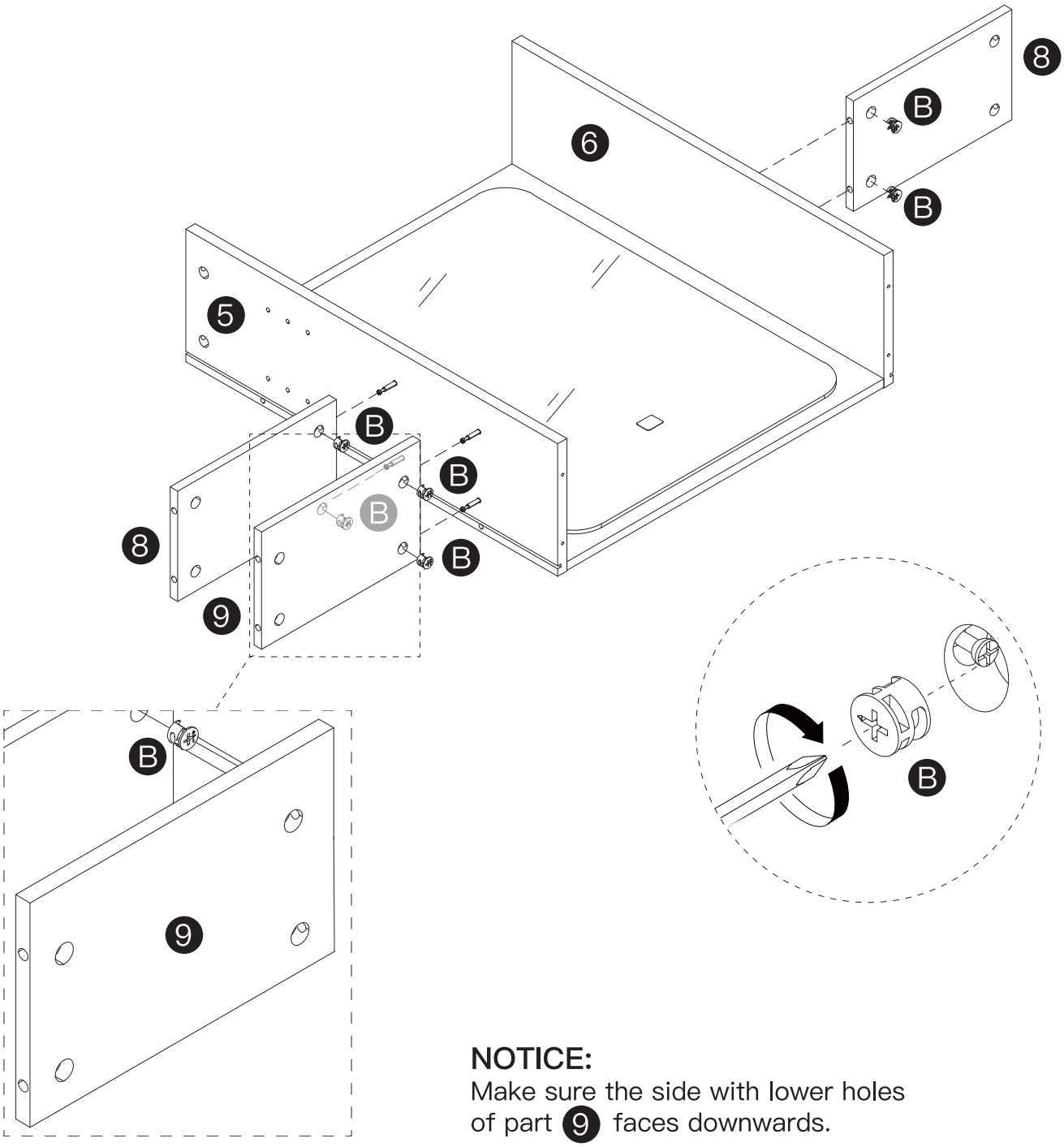

NOTICE:
Make sure the side with lower holes of part 9 faces downwards.

STEP 4

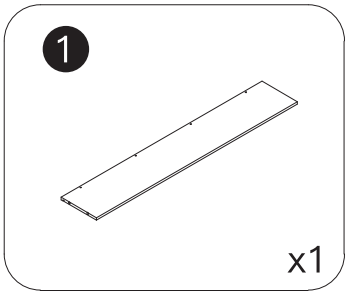

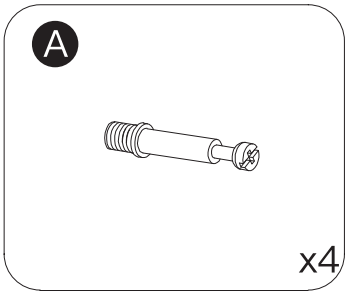

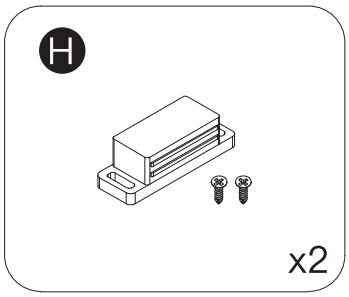

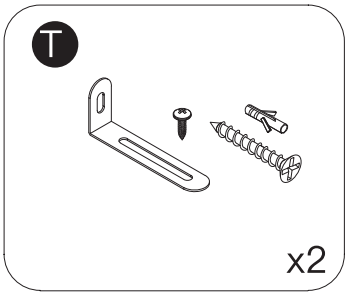

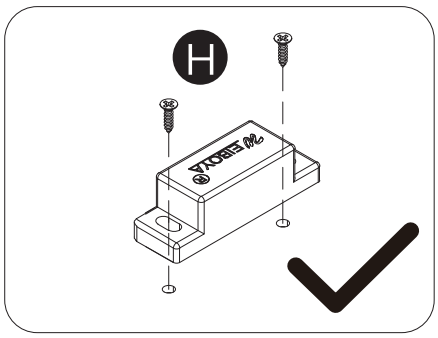

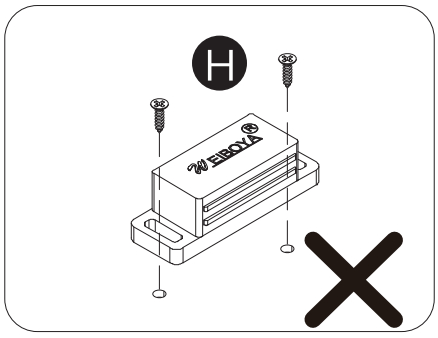

NOTICE:
The magnetic port faces outward.

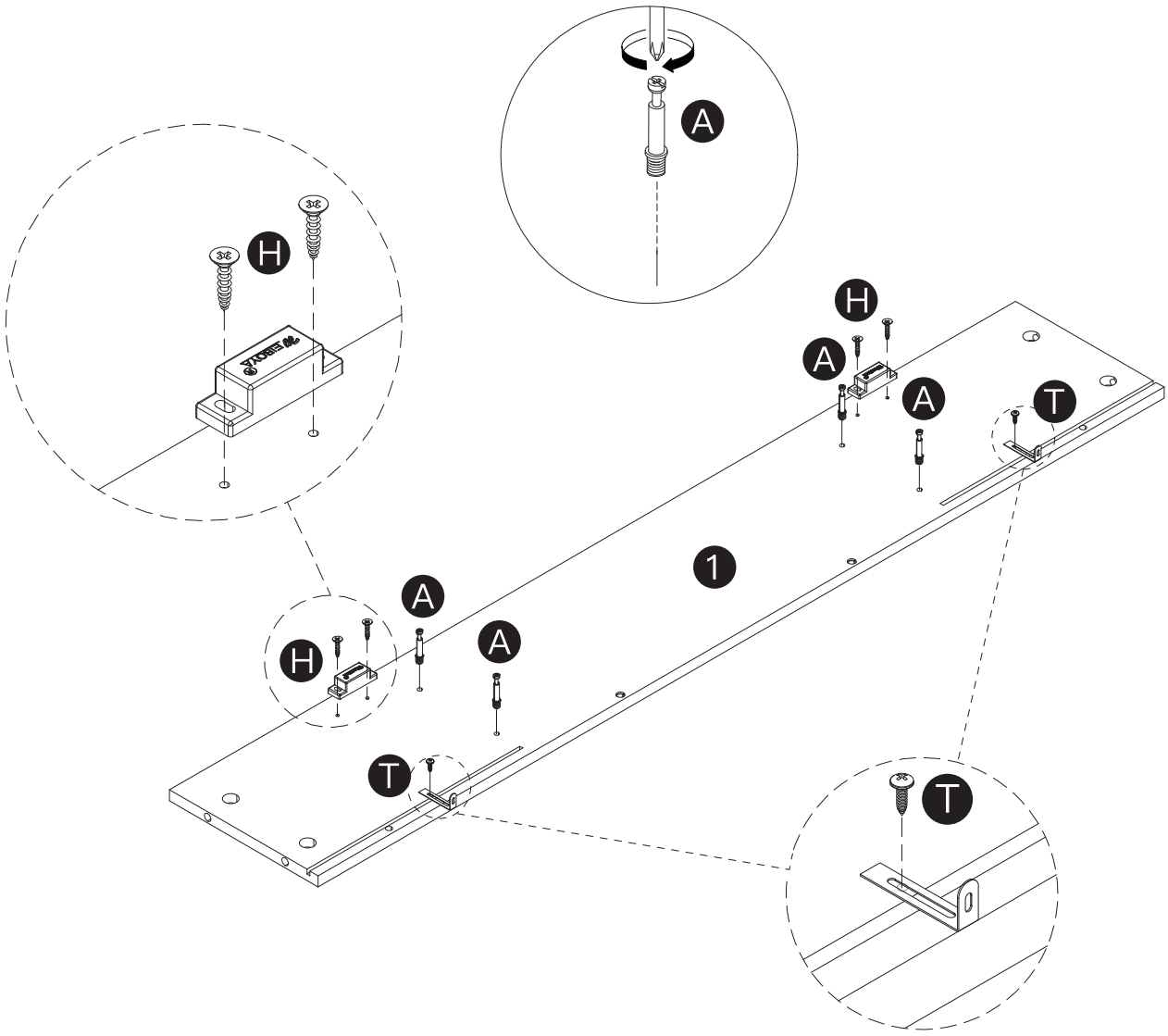

STEP 5

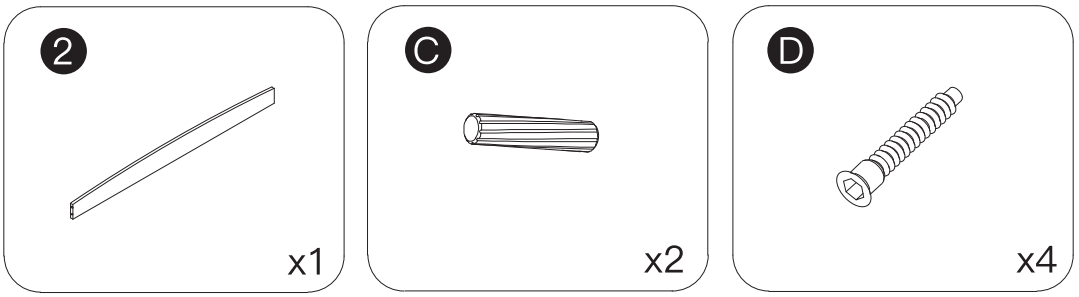

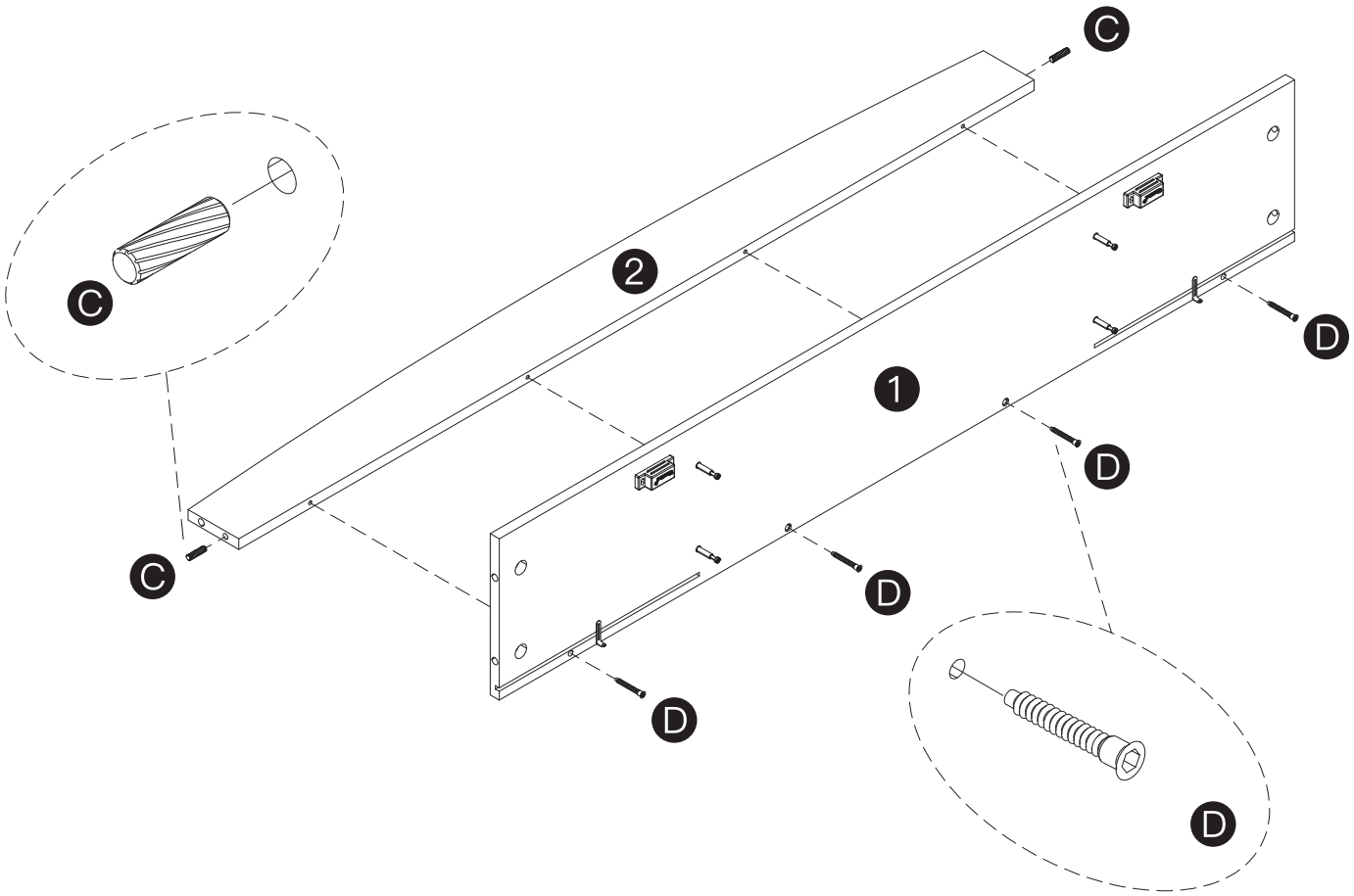

STEP 6

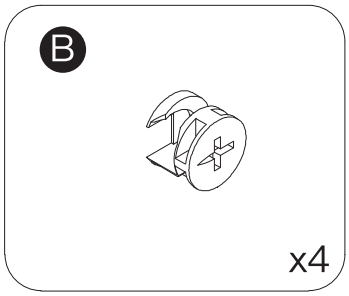

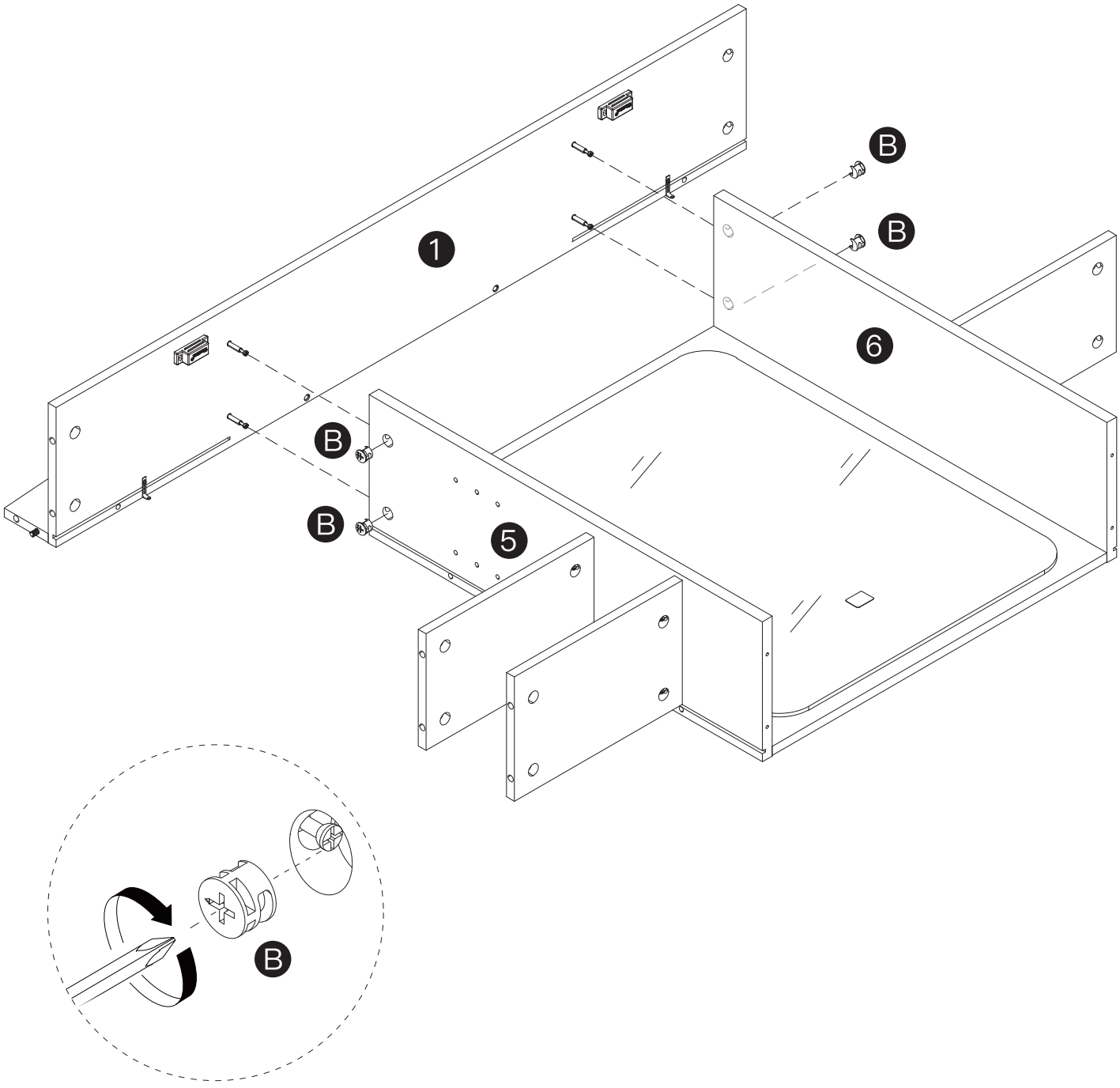

STEP 7

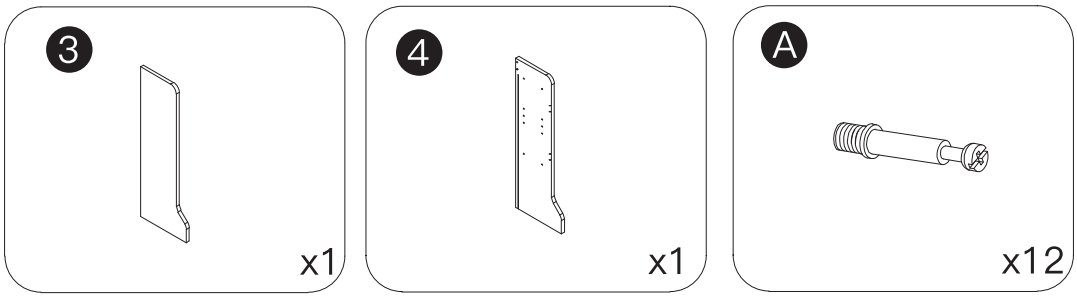

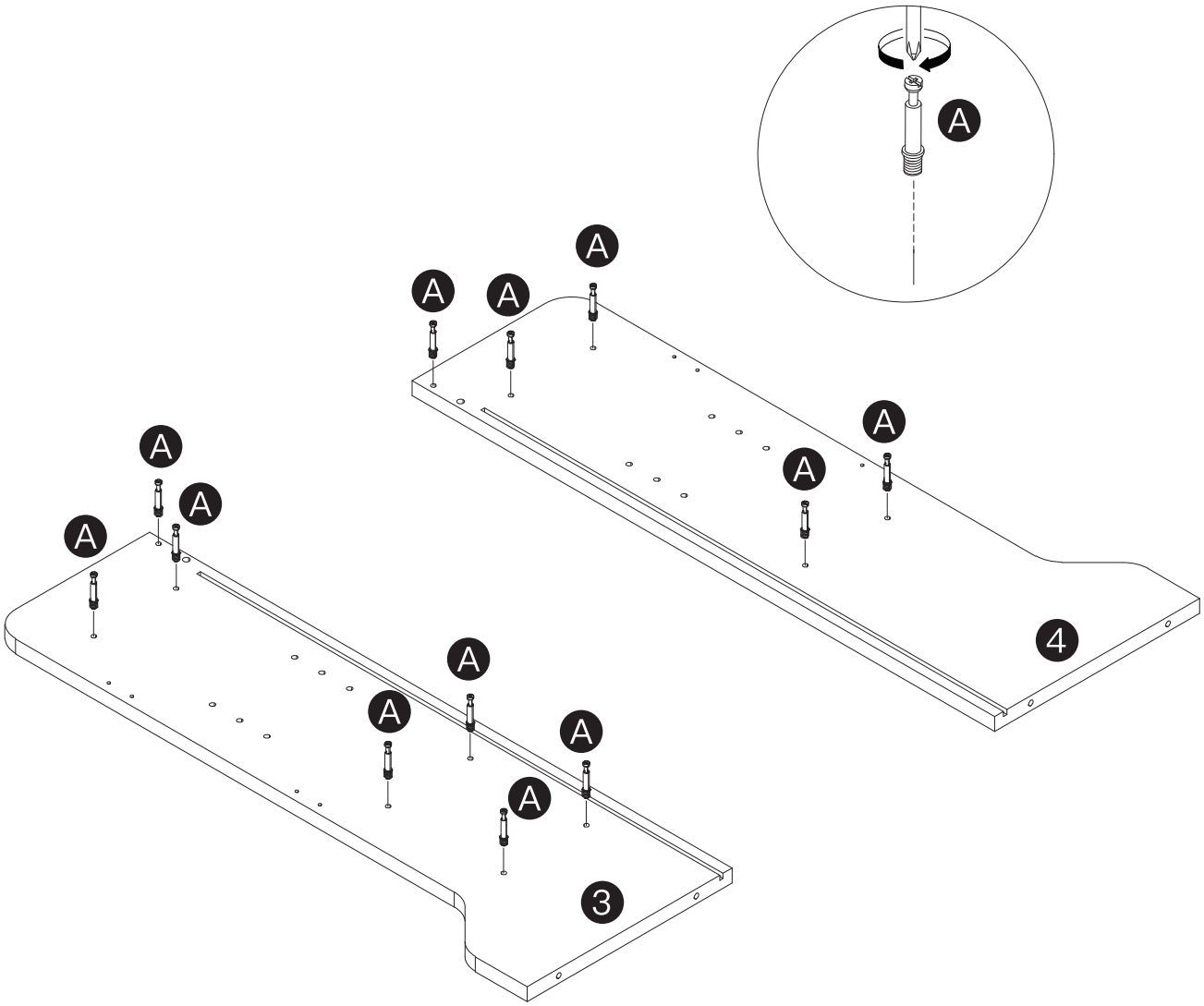

STEP 8

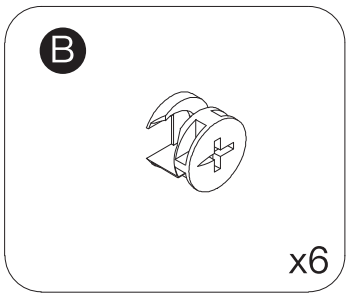

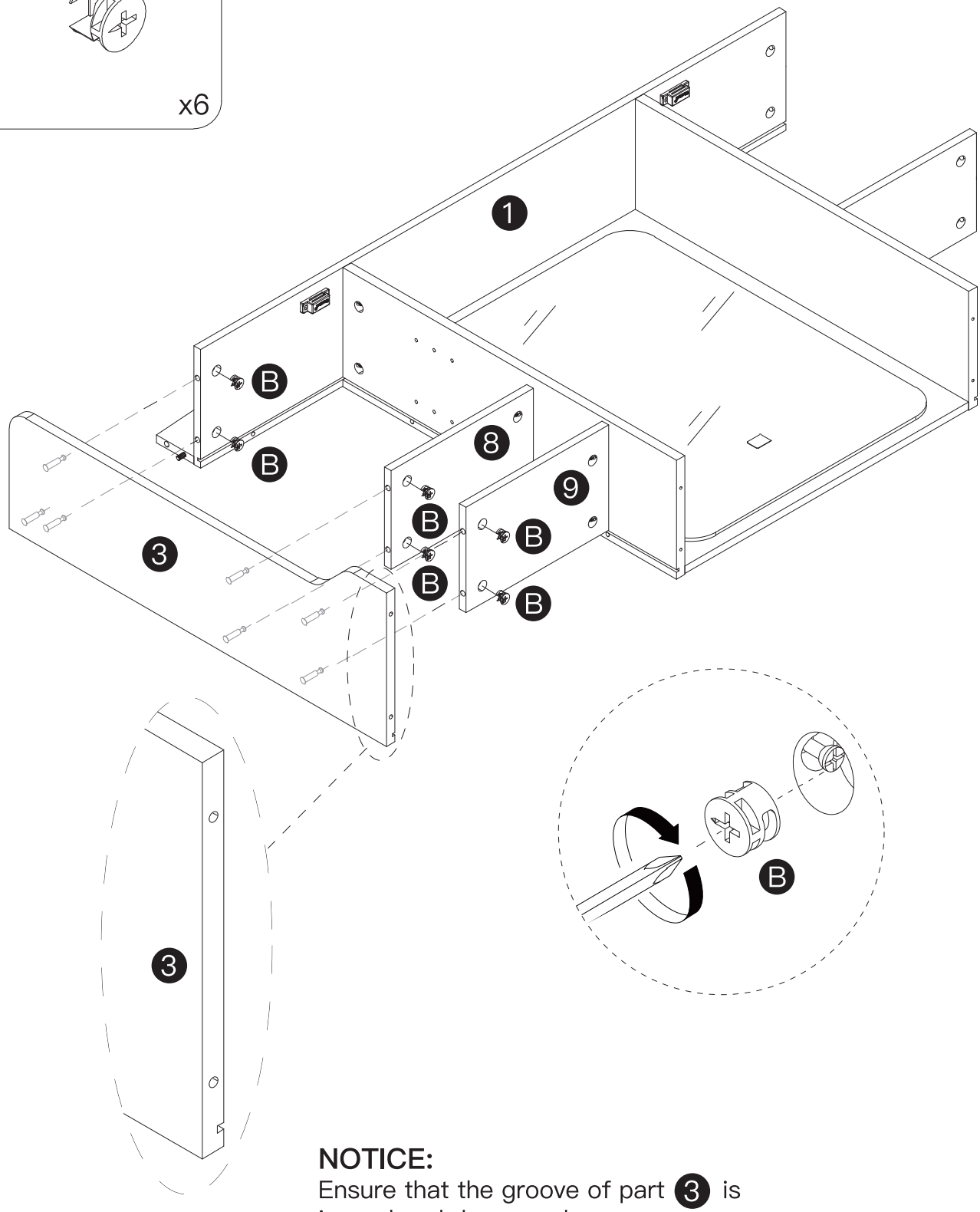

NOTICE:
Ensure that the groove of part 3 is inward and downward.

STEP 9

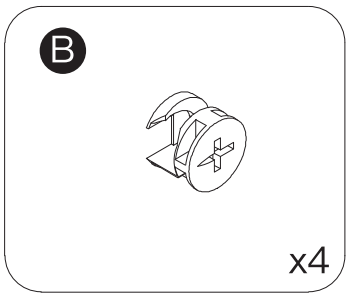

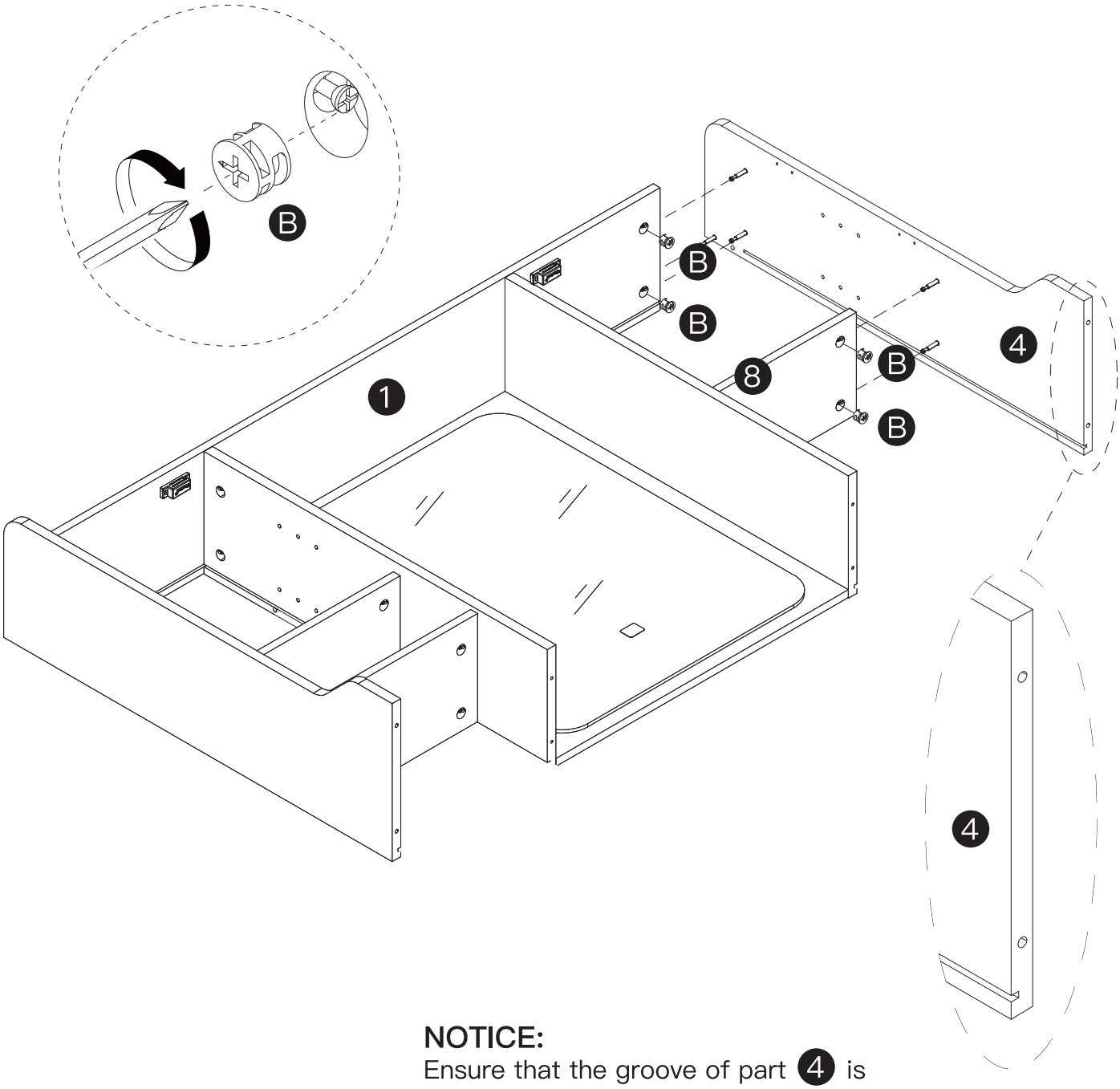

NOTICE:
Ensure that the groove of part 4 is inward and downward.

STEP 10

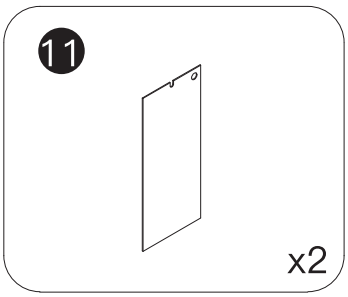

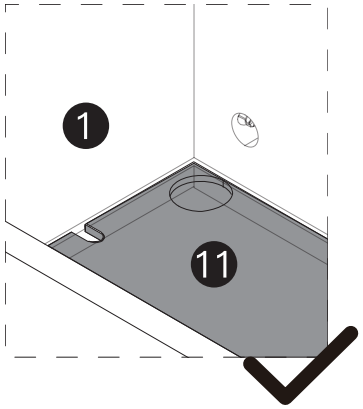

NOTICE:
Please make sure that part 11 are perfectly embedded in part 1.

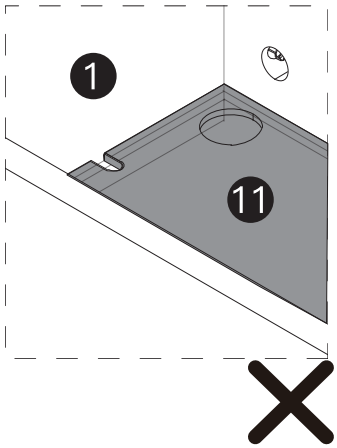

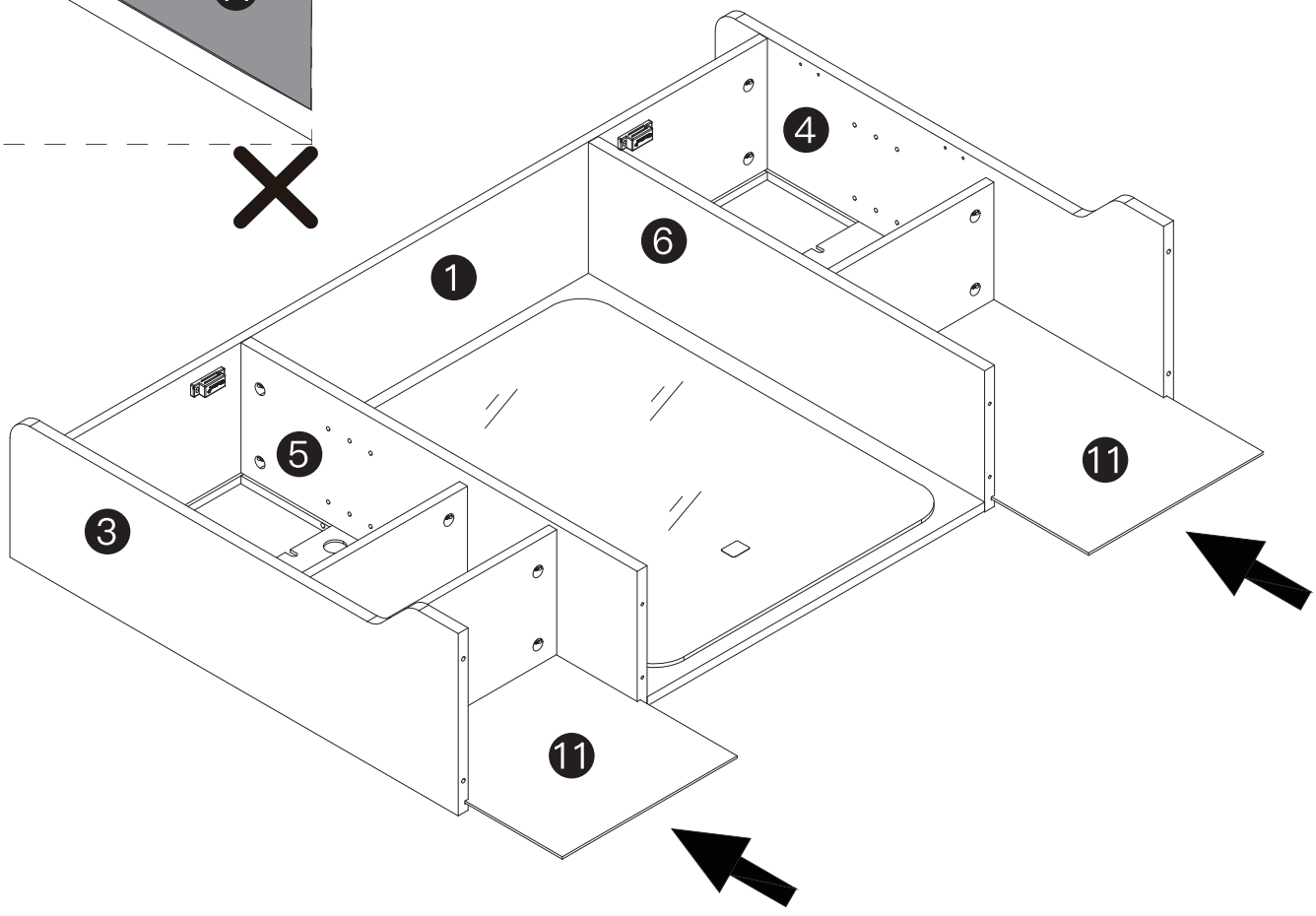

STEP 11

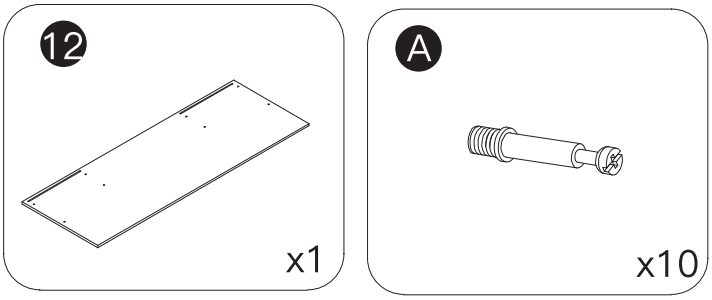

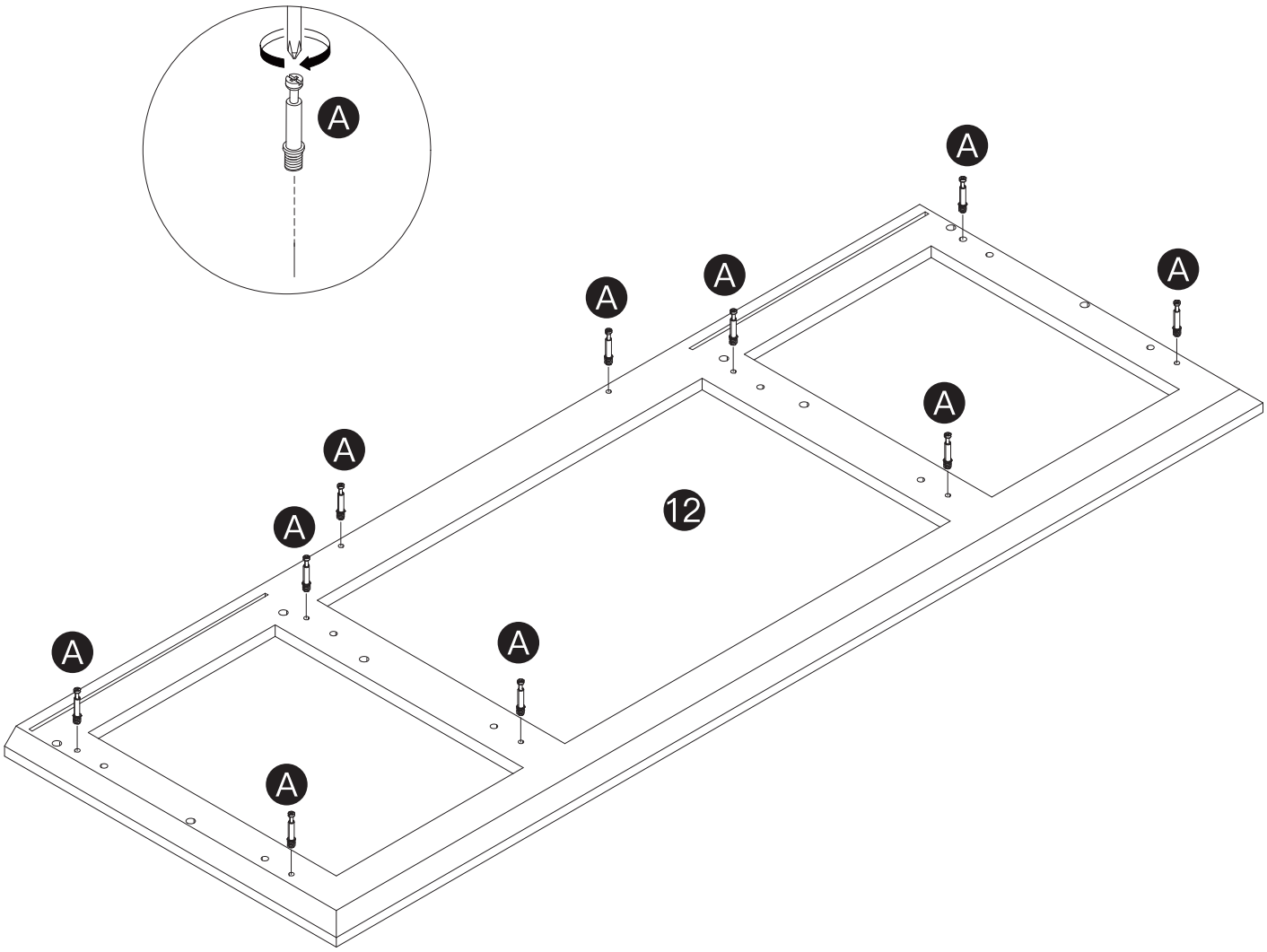

STEP 12

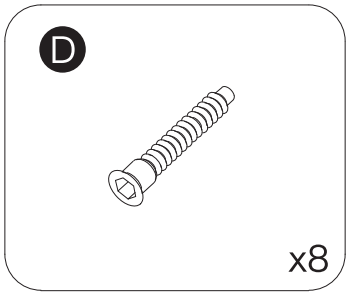

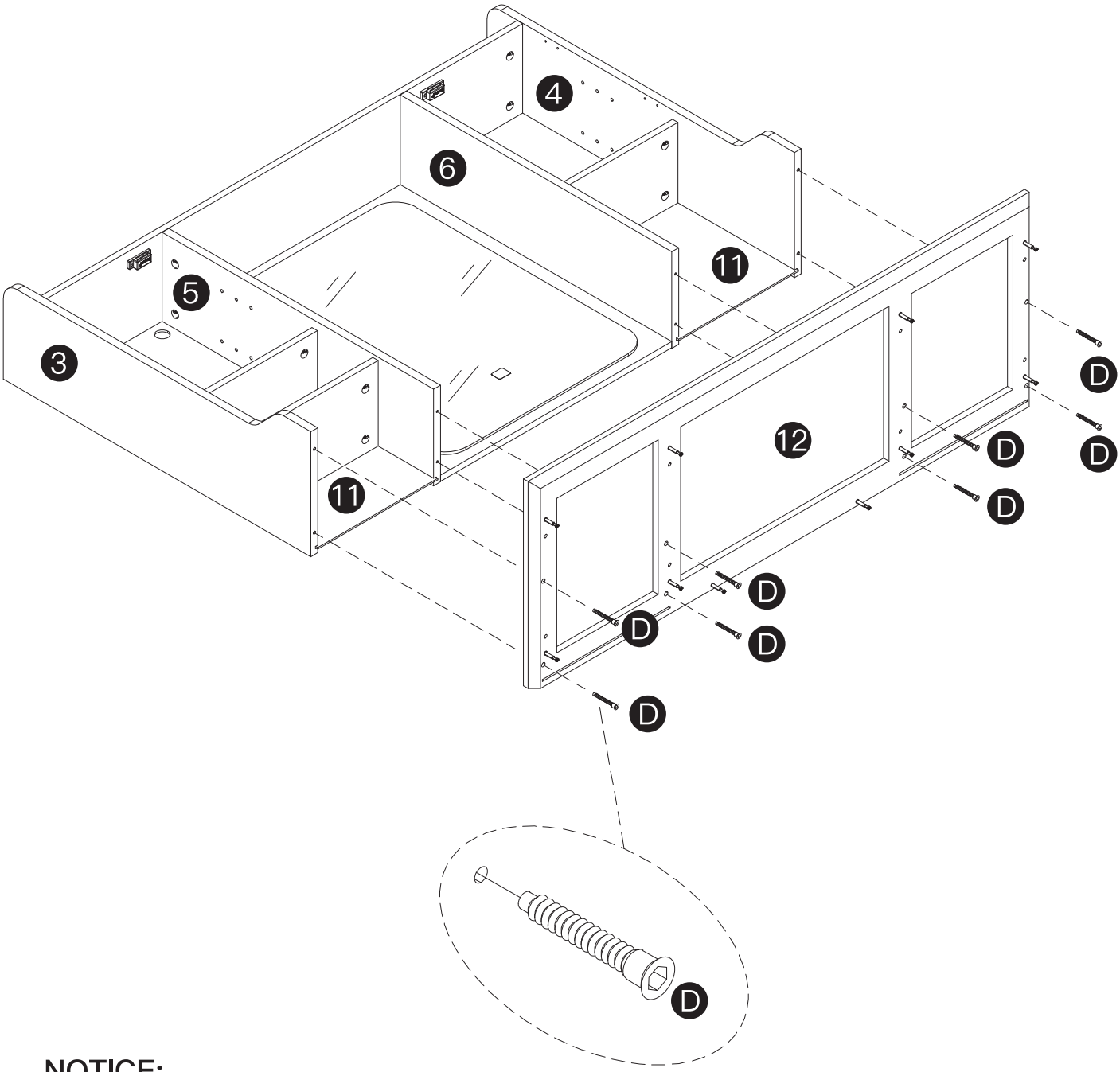

NOTICE:
Please insert the part 11 perfectly into the groove of the part 12 before installing the part D.

STEP 13

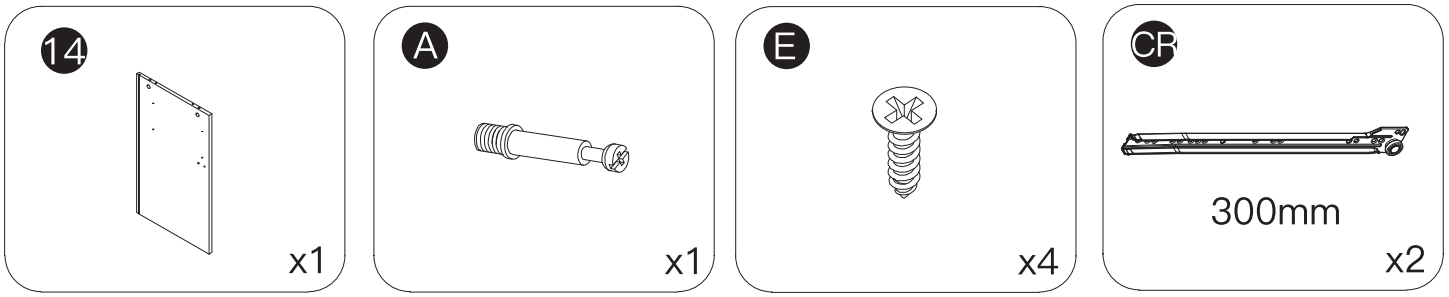

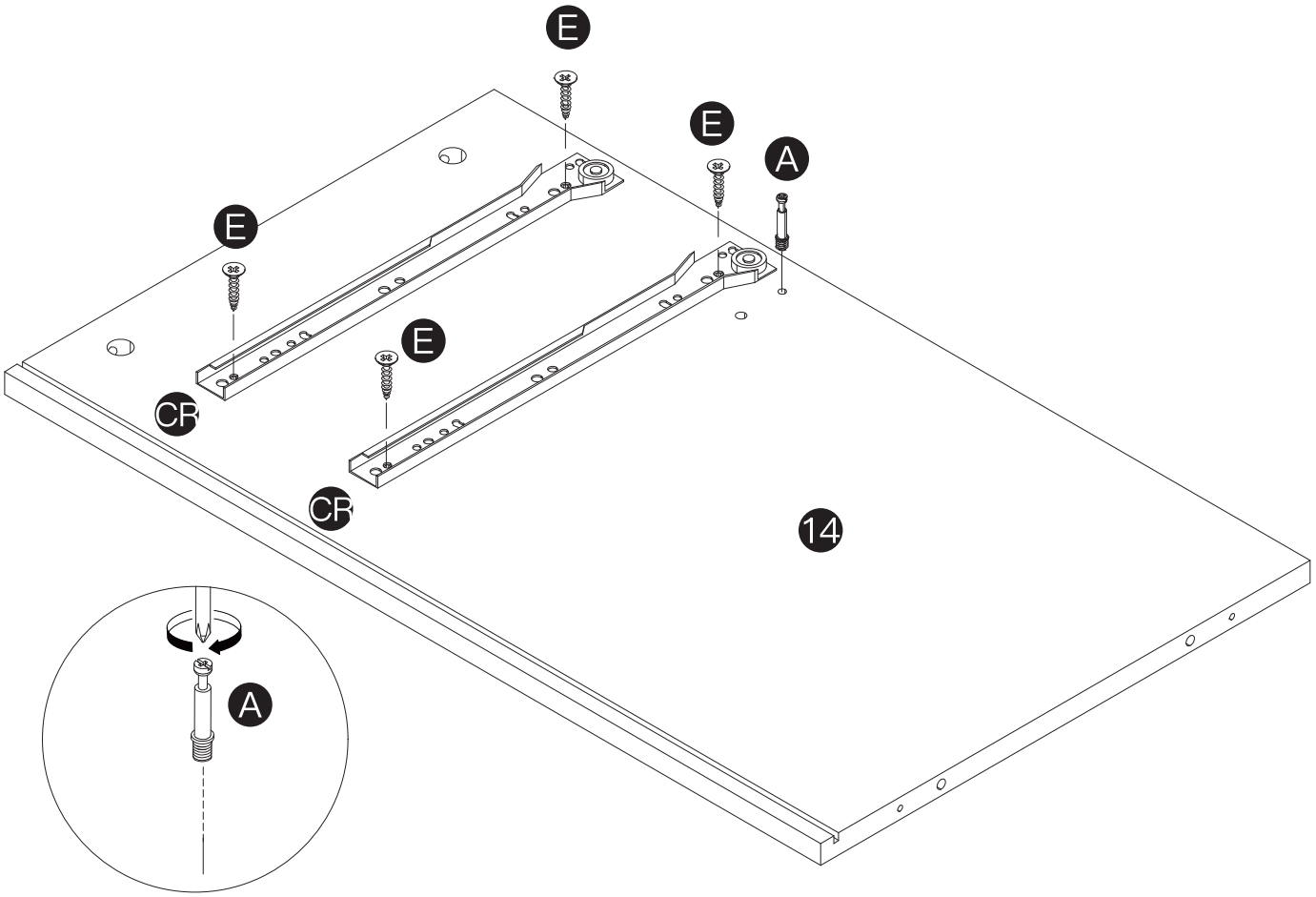

REMARK:

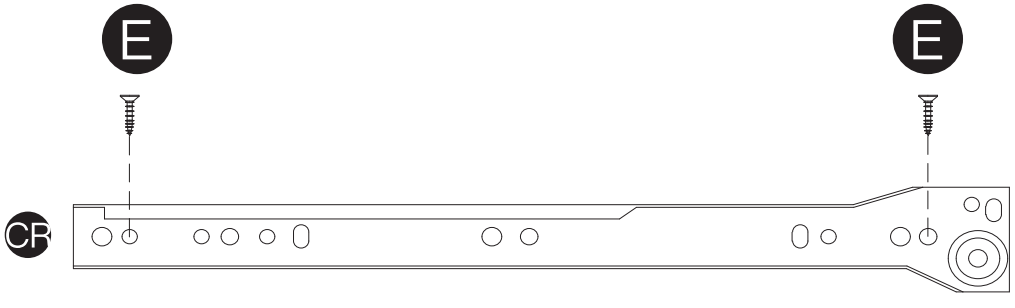

STEP 14

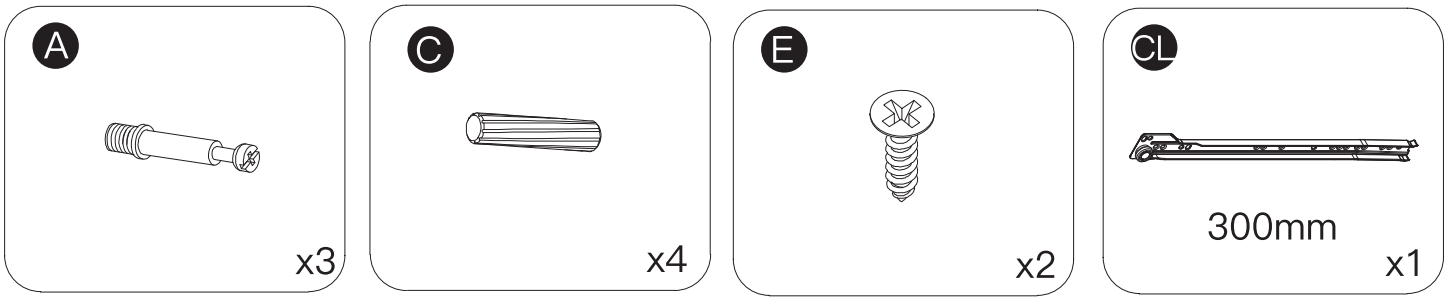

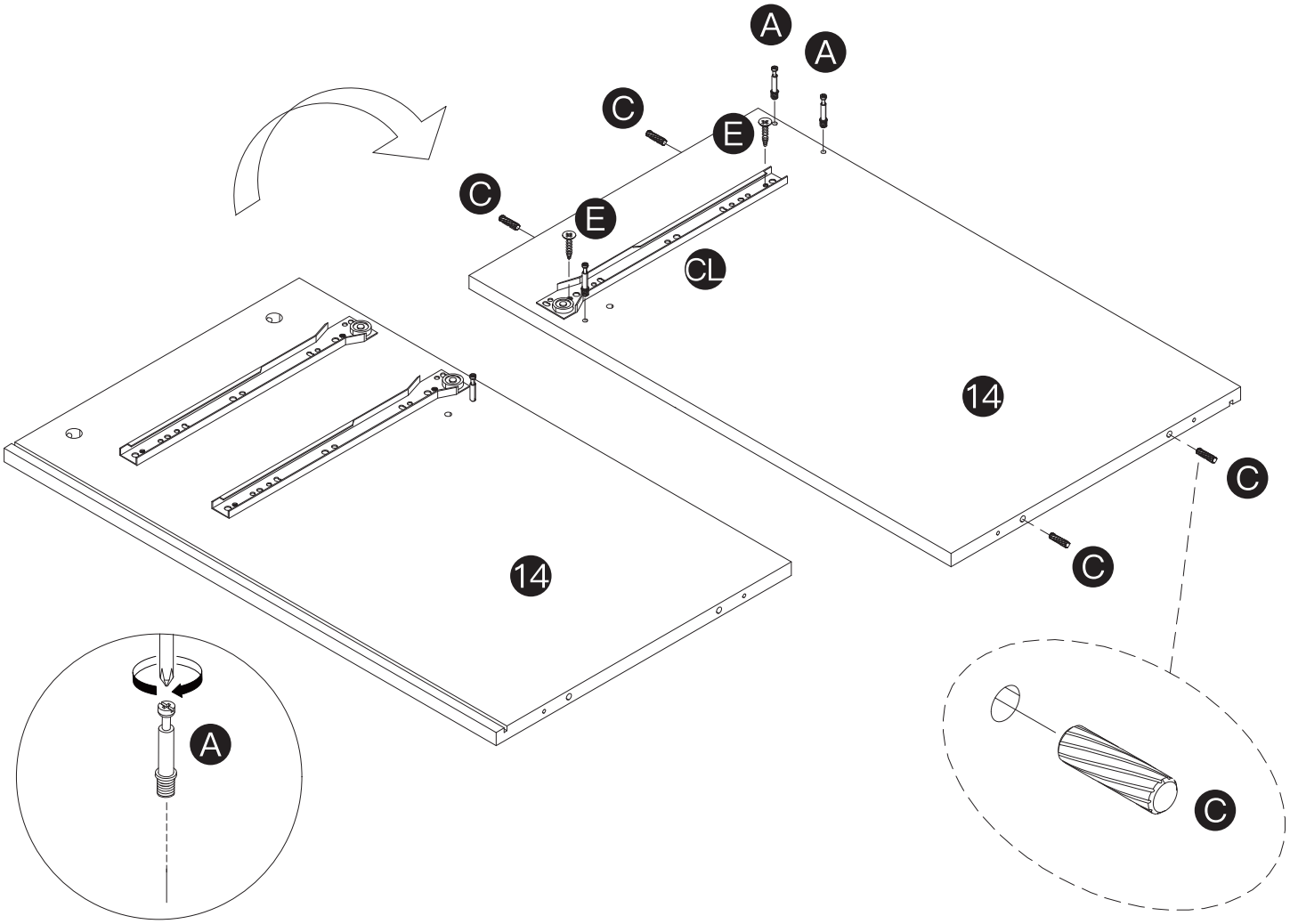

REMARK:

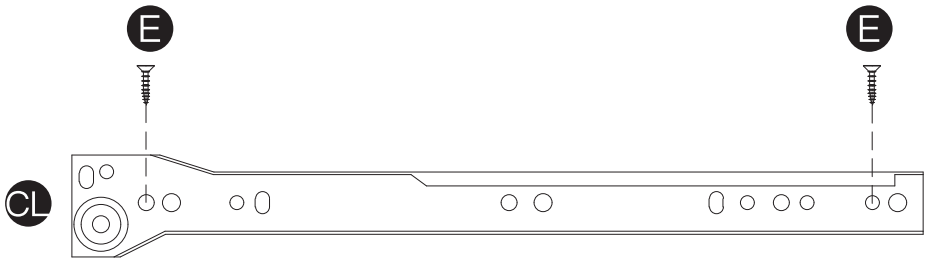

STEP 15

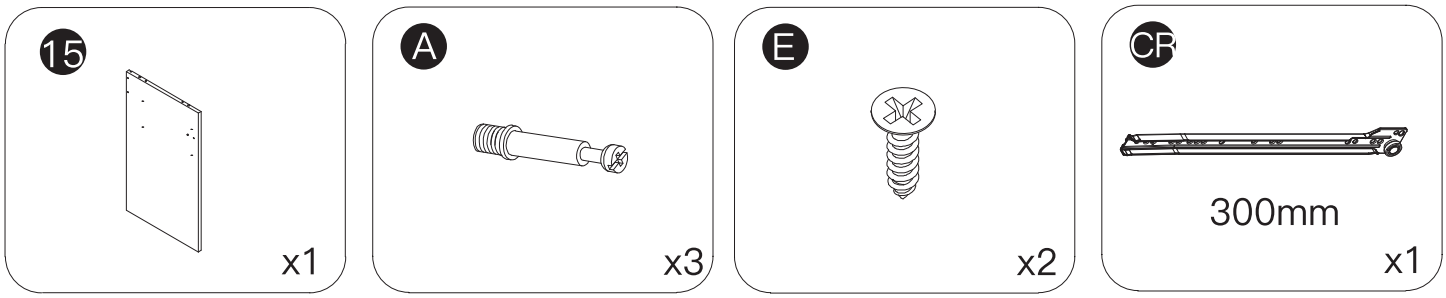

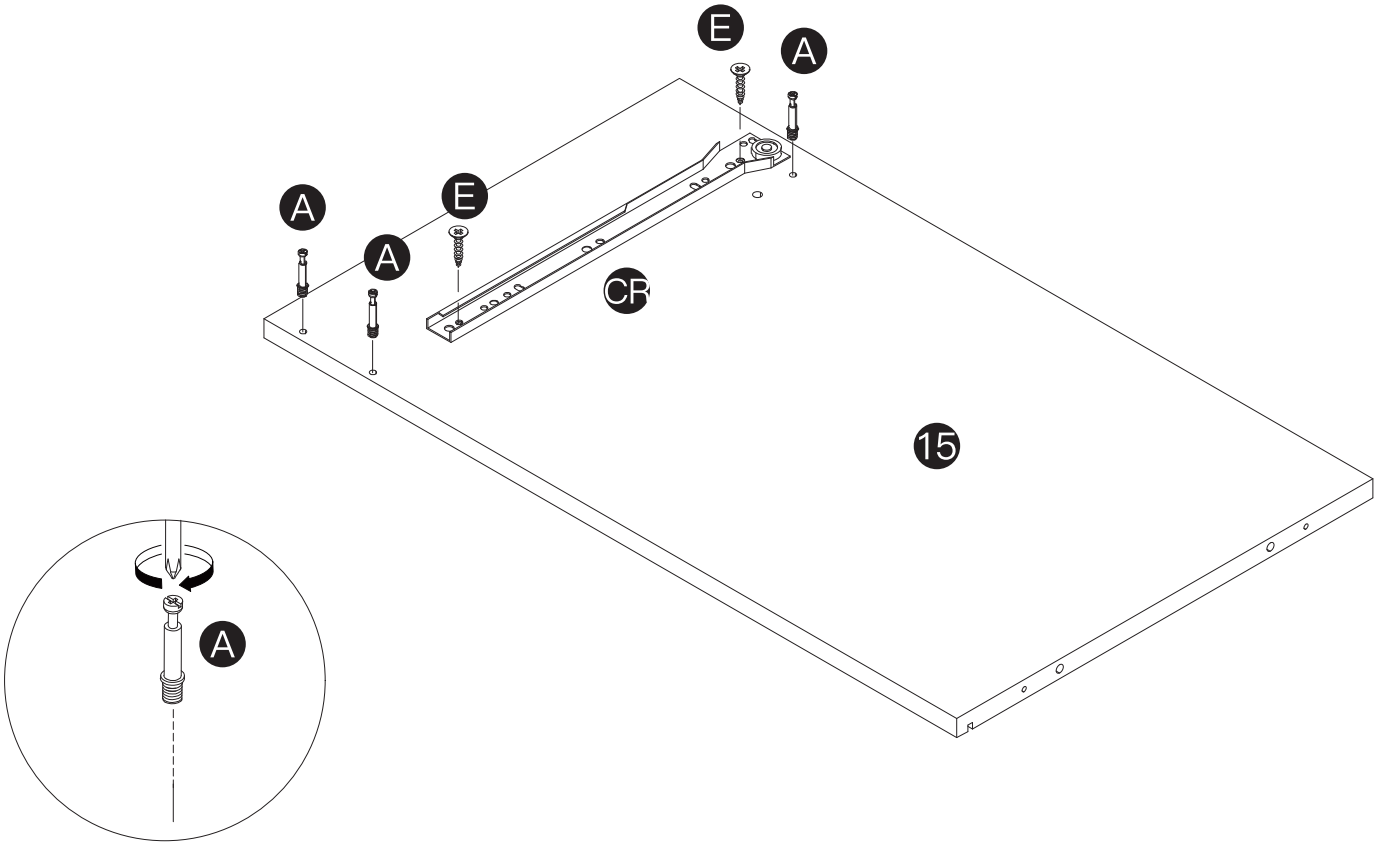

REMARK:

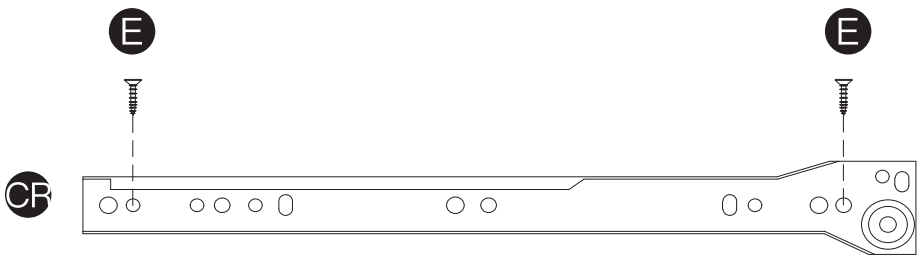

STEP 16

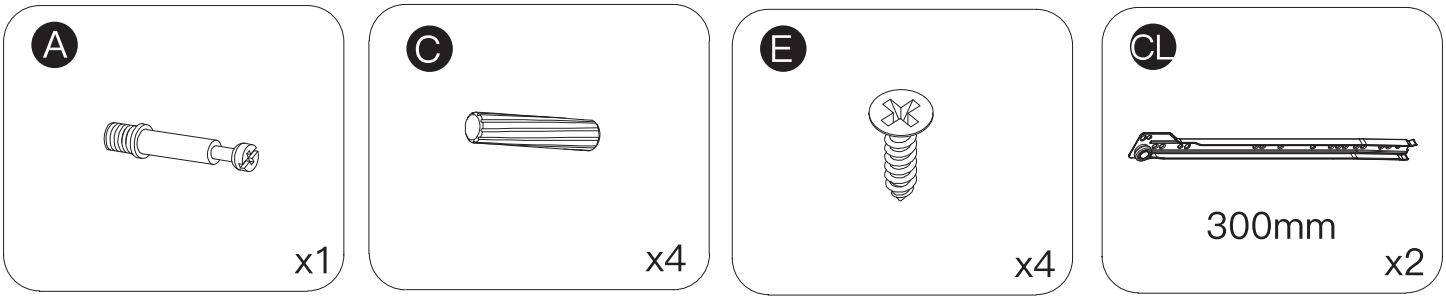

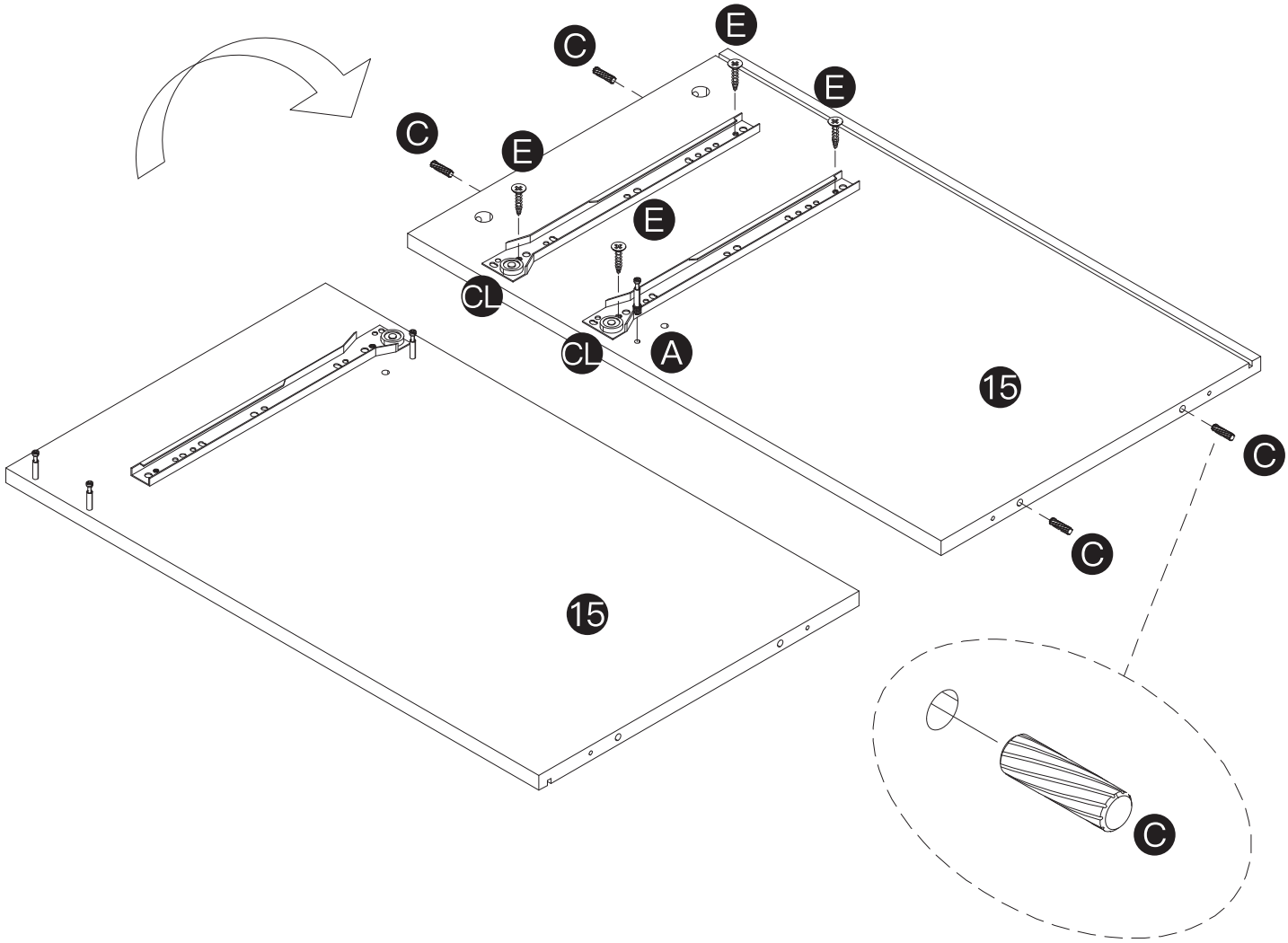

REMARK:

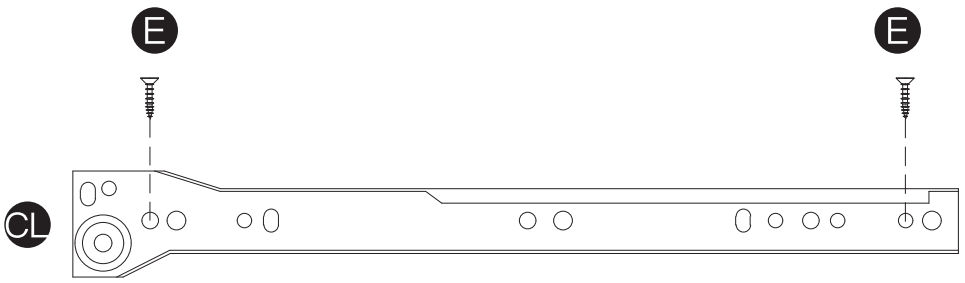

STEP 17

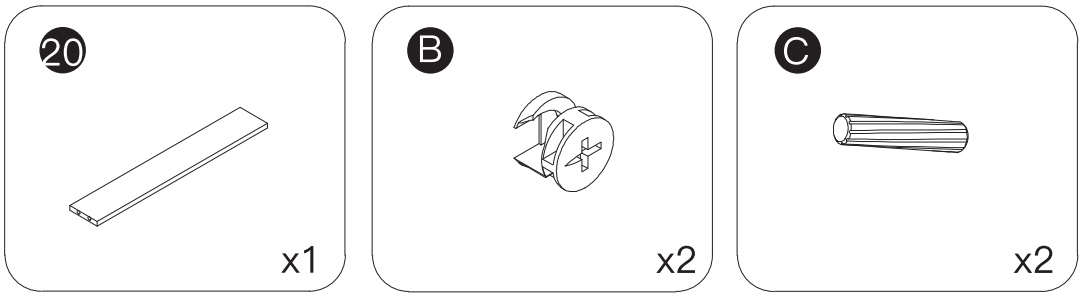

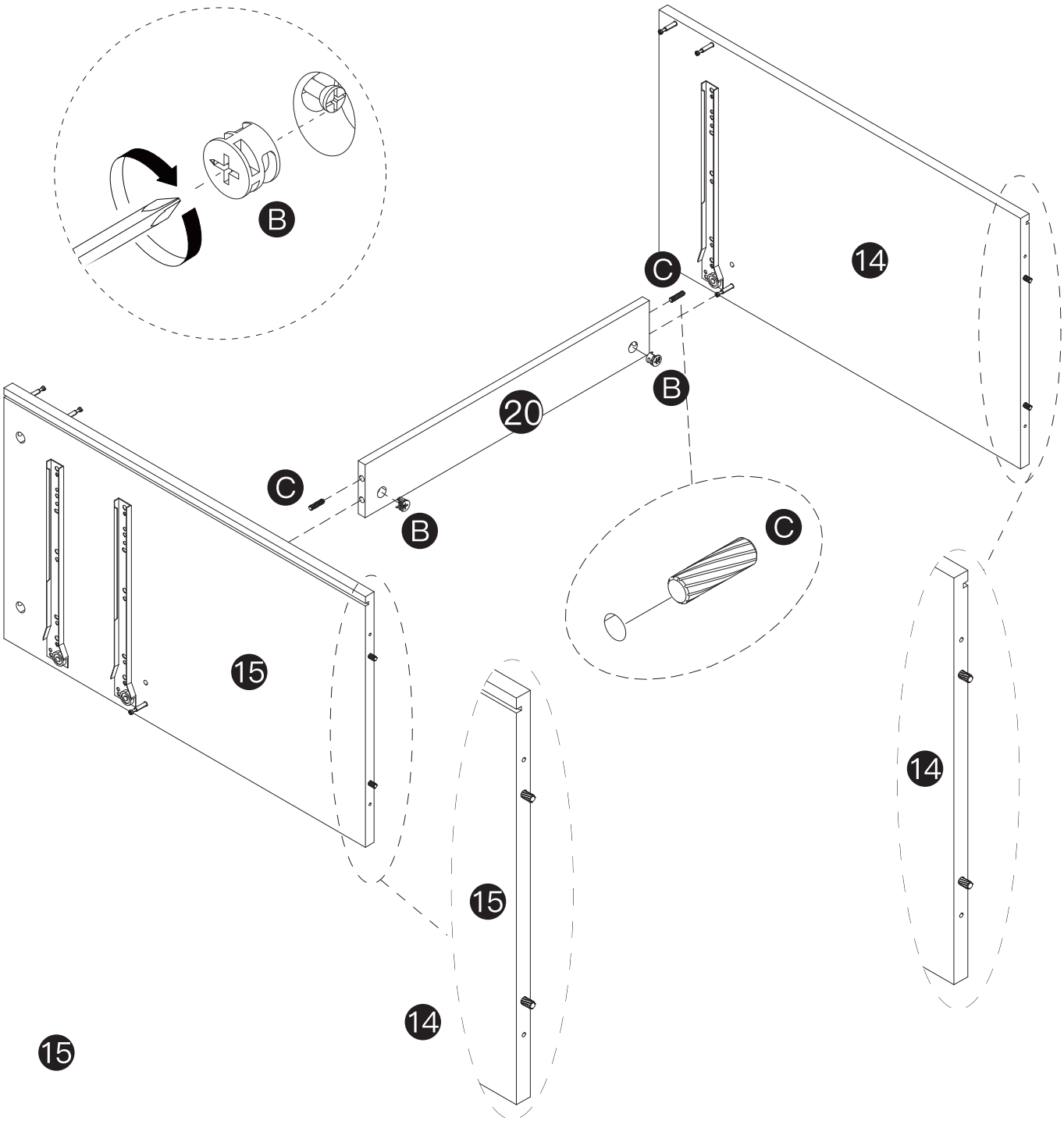

STEP 18

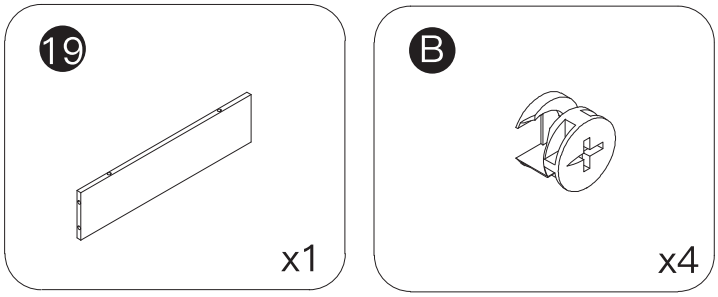

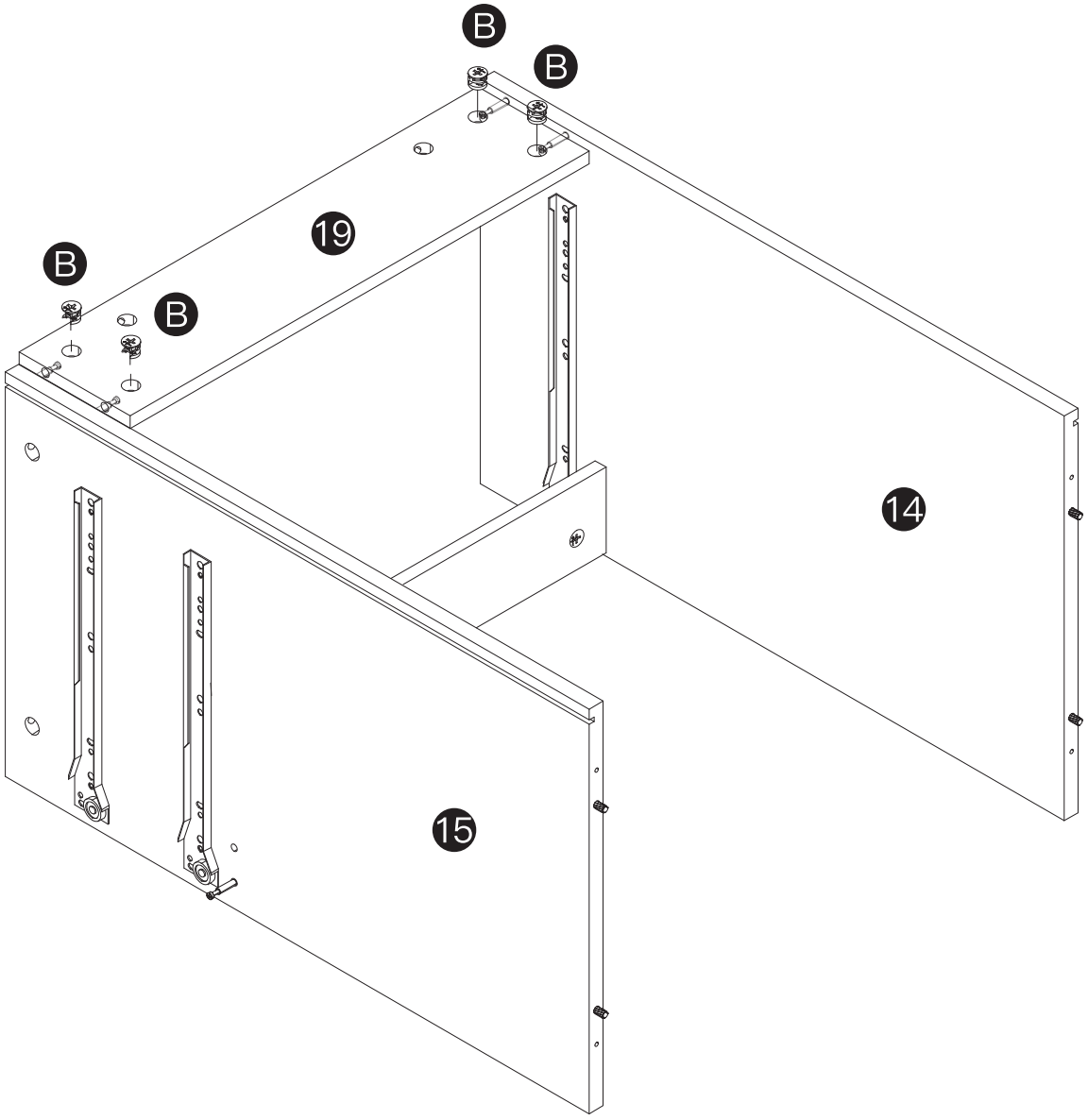

STEP 19

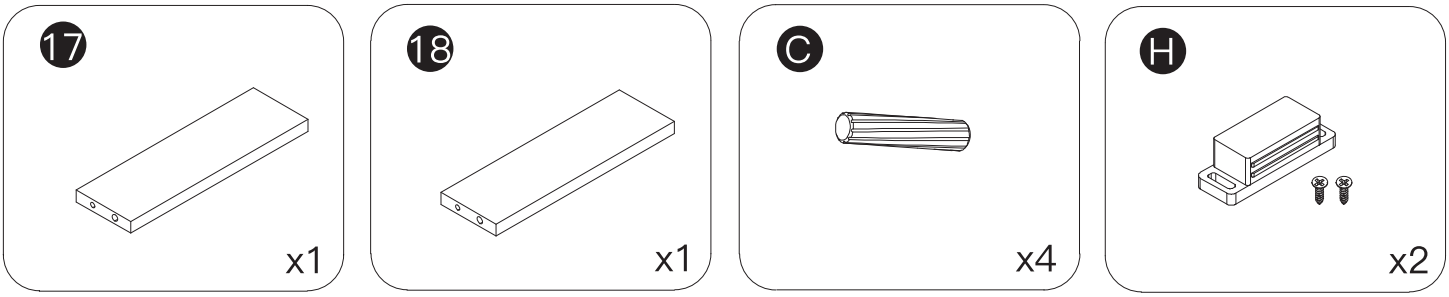

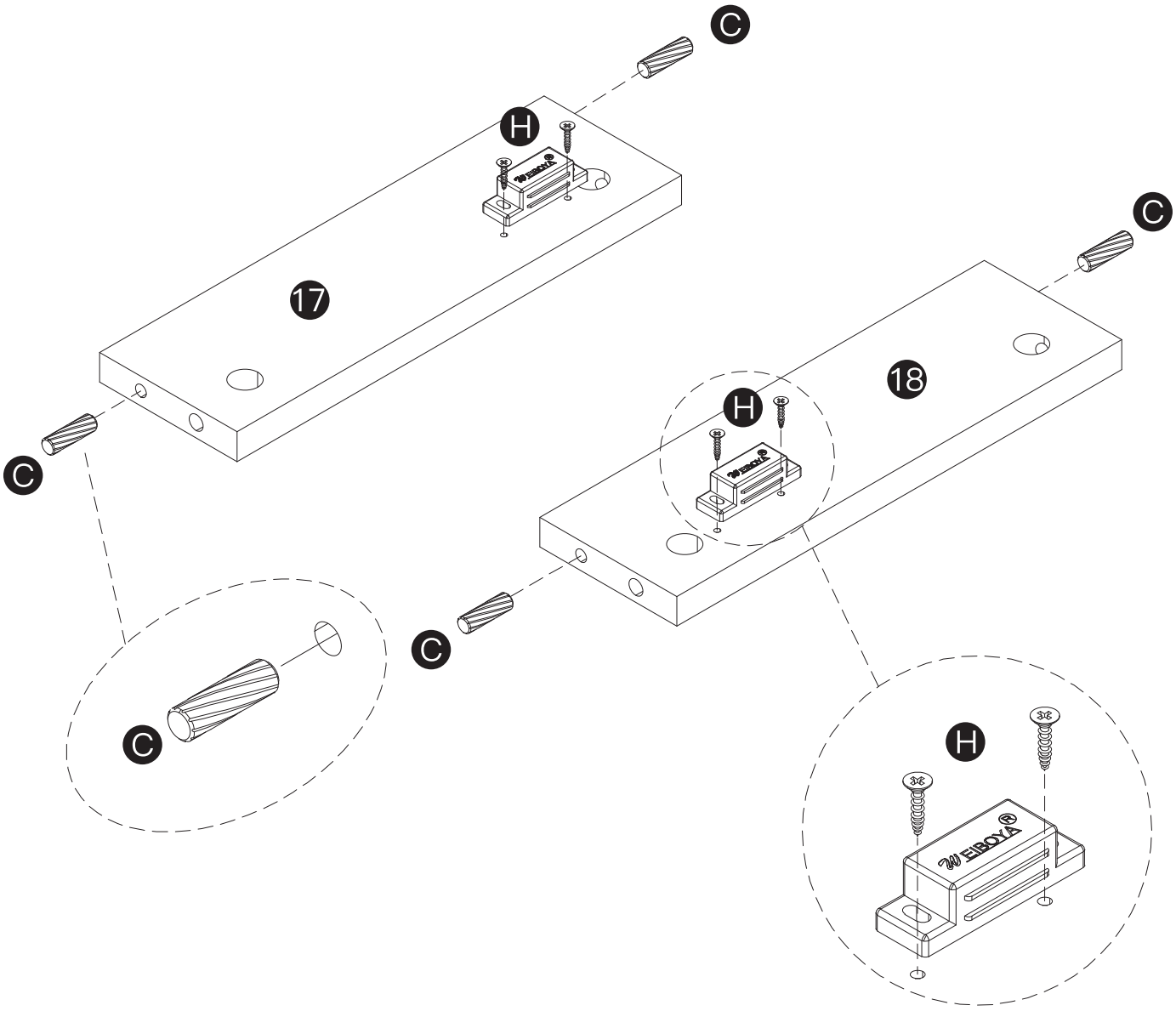

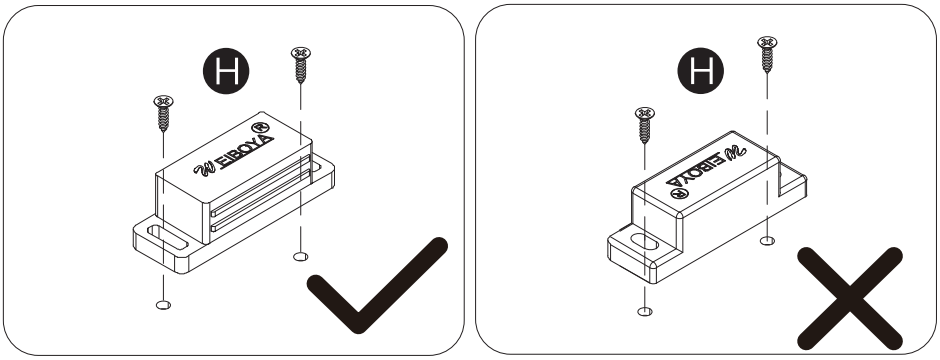

NOTICE:
The magnetic port faces outward.

STEP 20

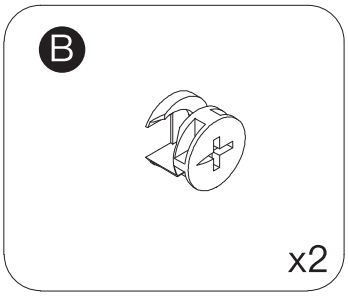

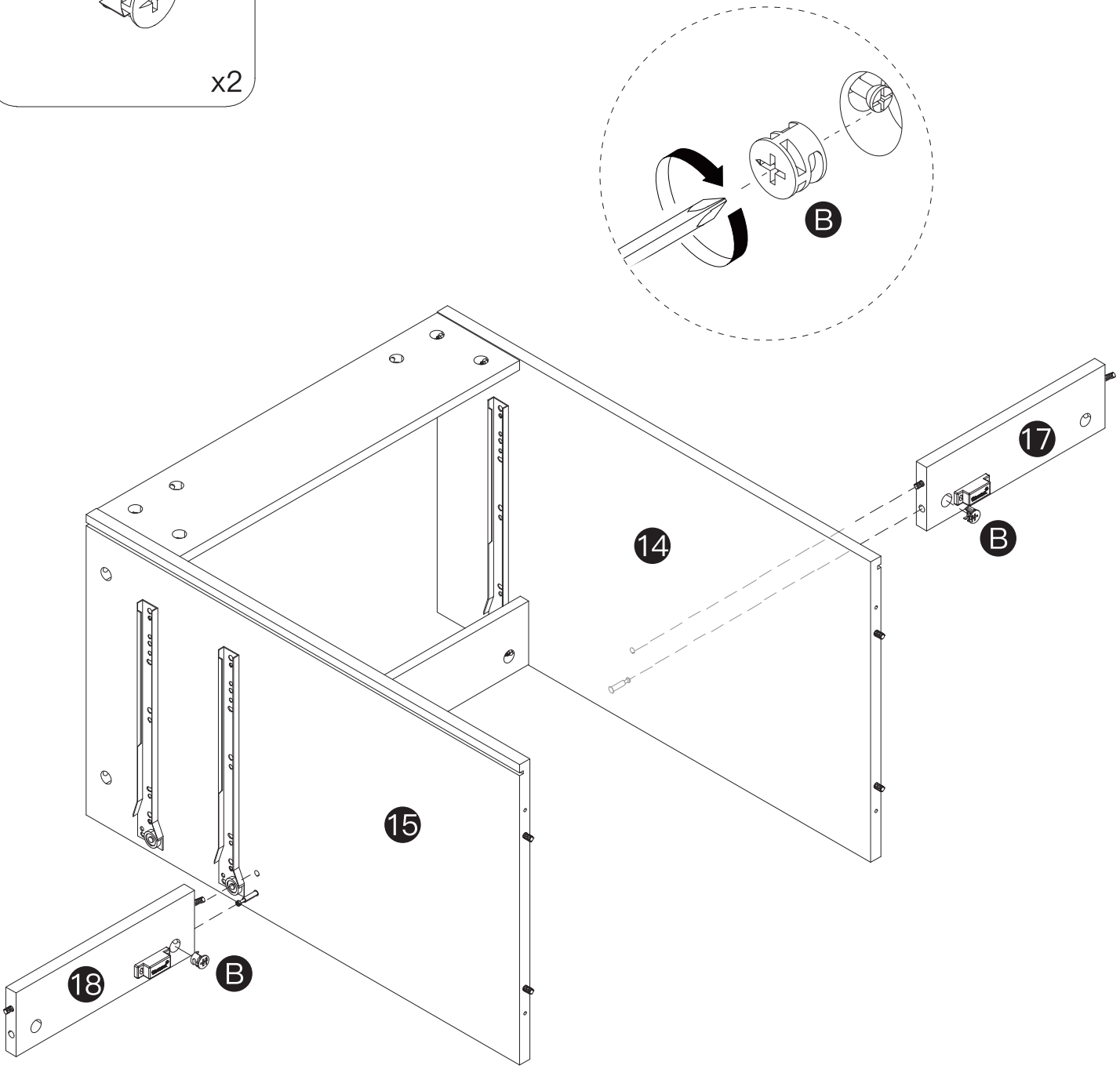

STEP 21

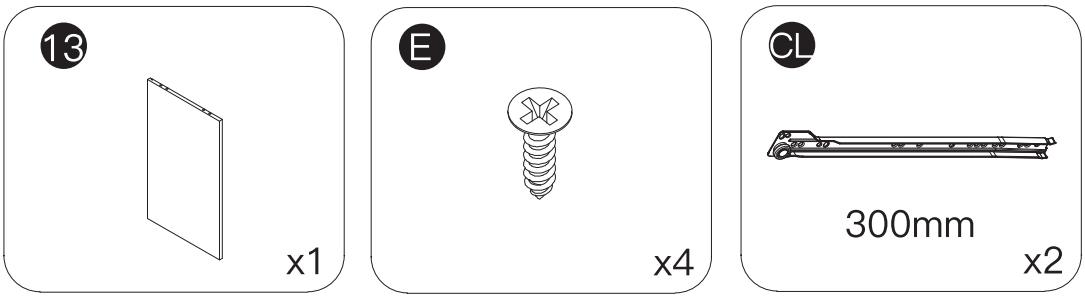

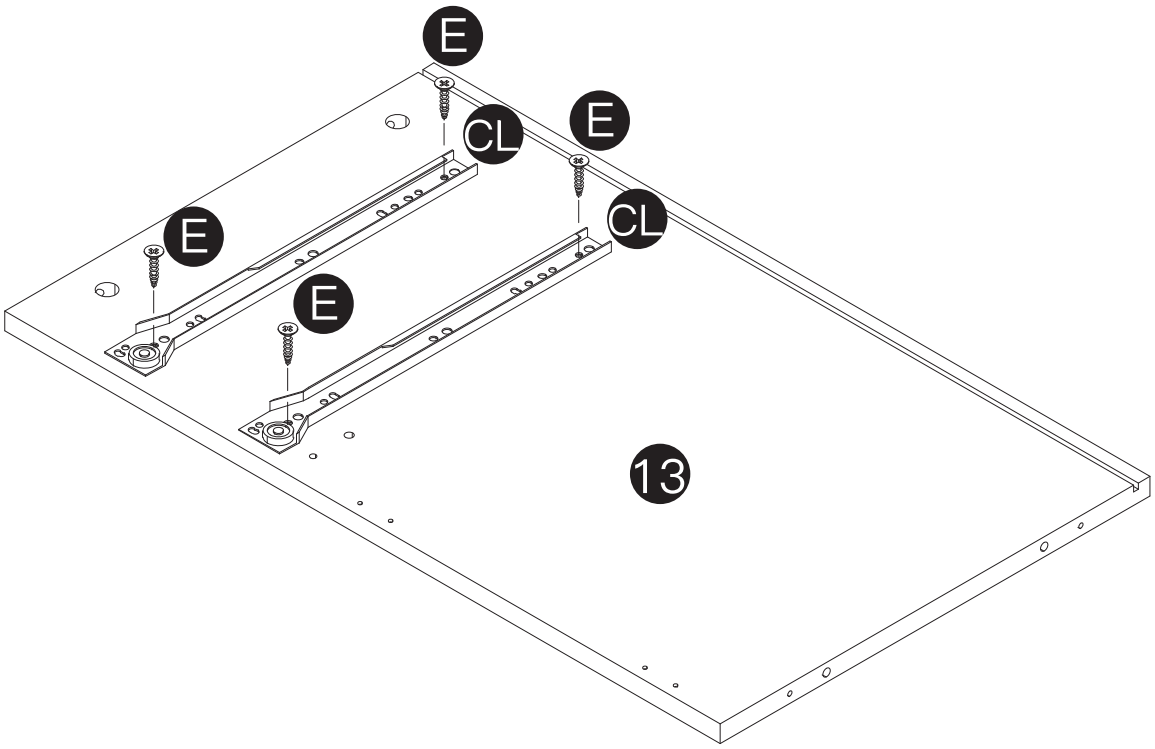

REMARK:

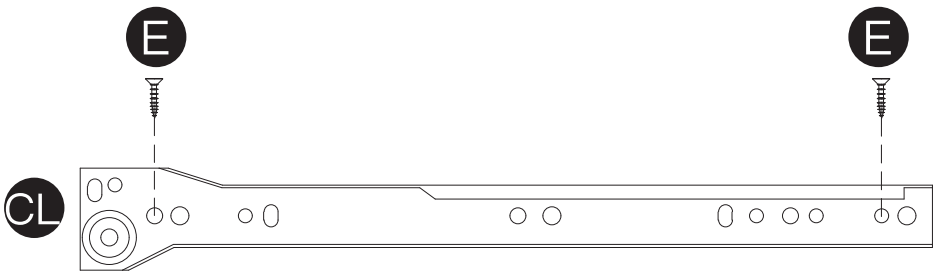

STEP 22

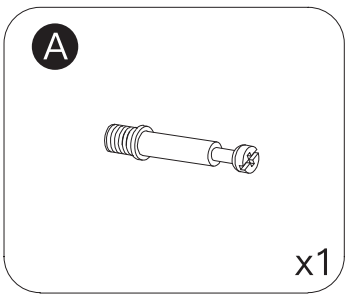

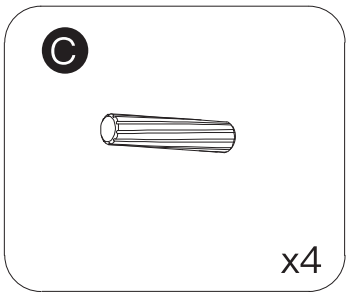

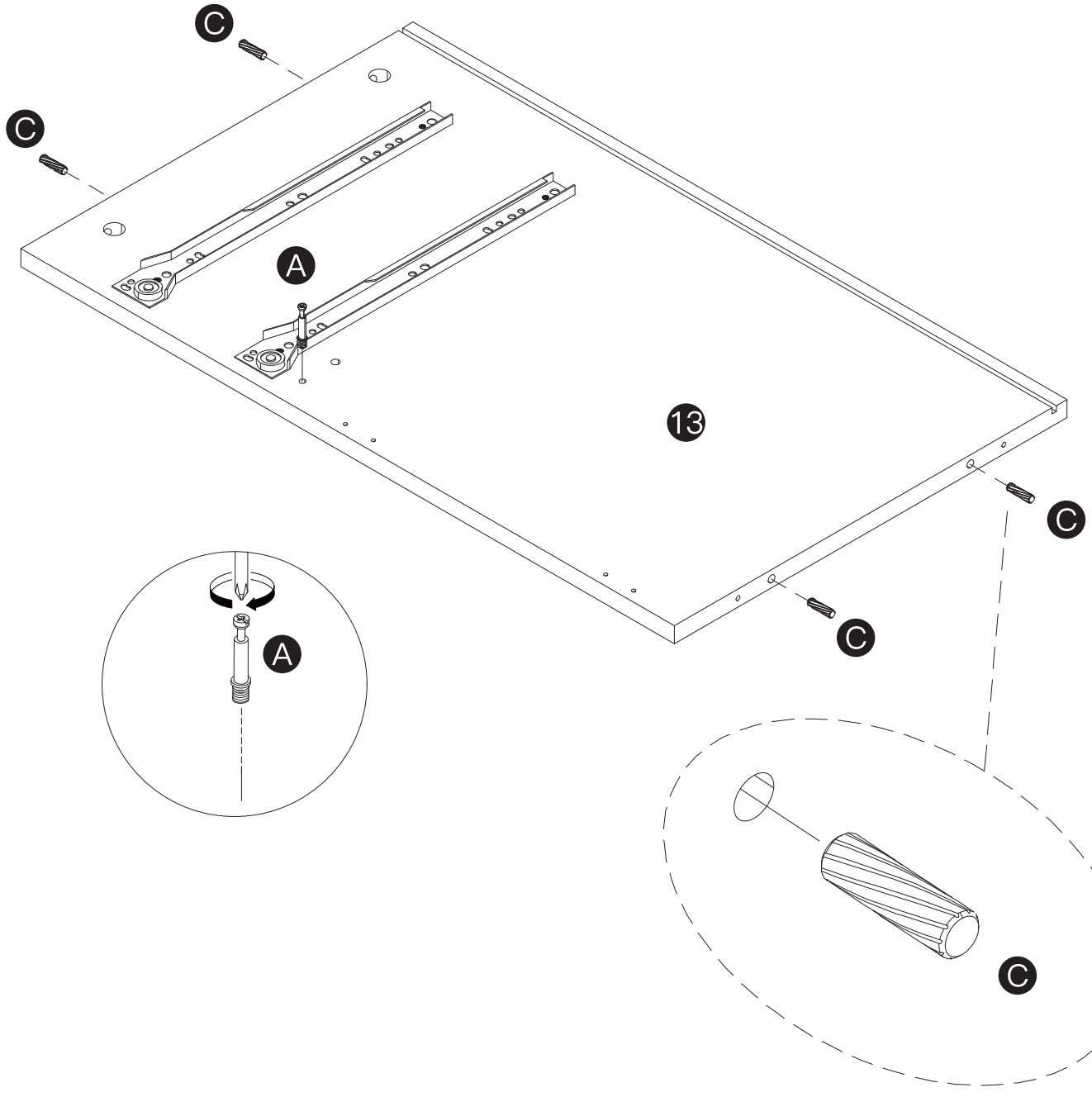

STEP 23

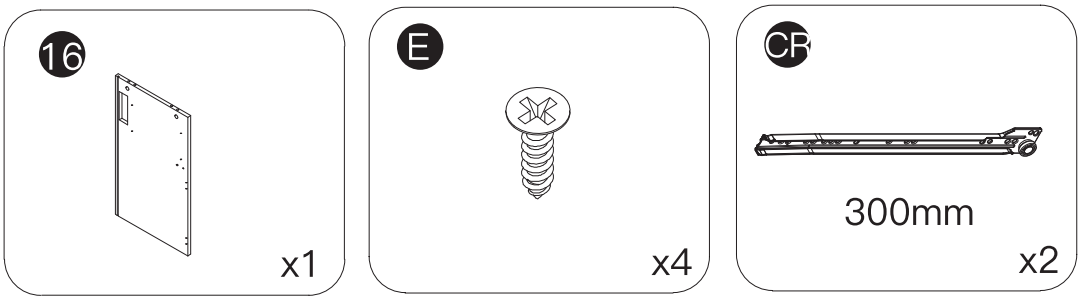

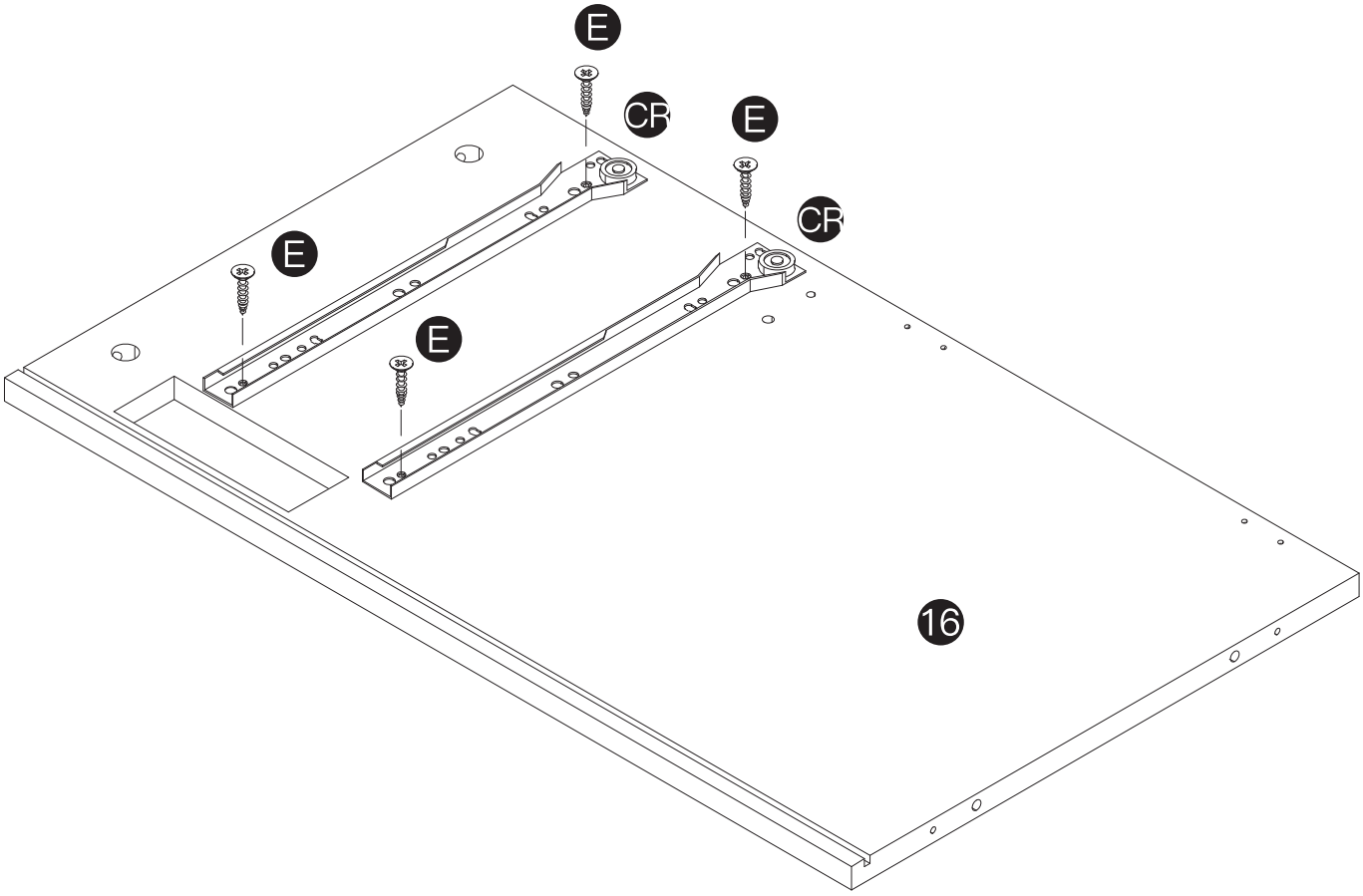

REMARK:

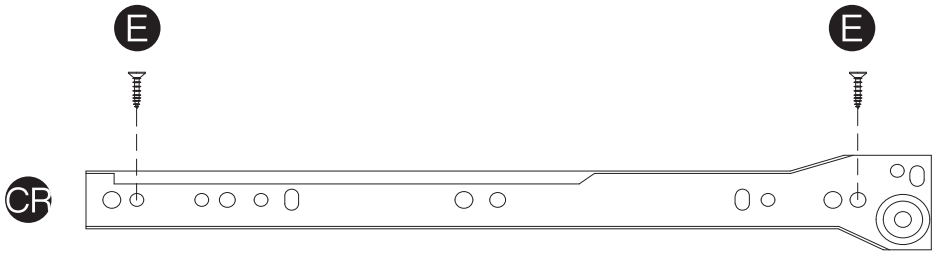

STEP 24

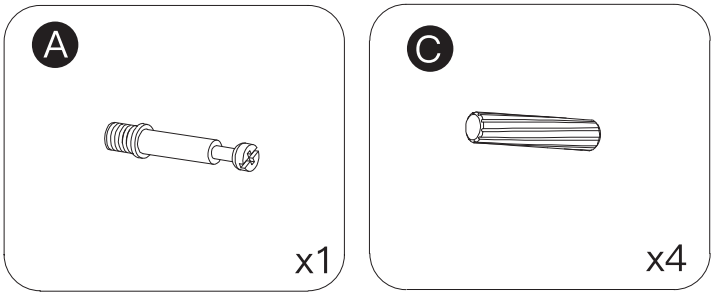

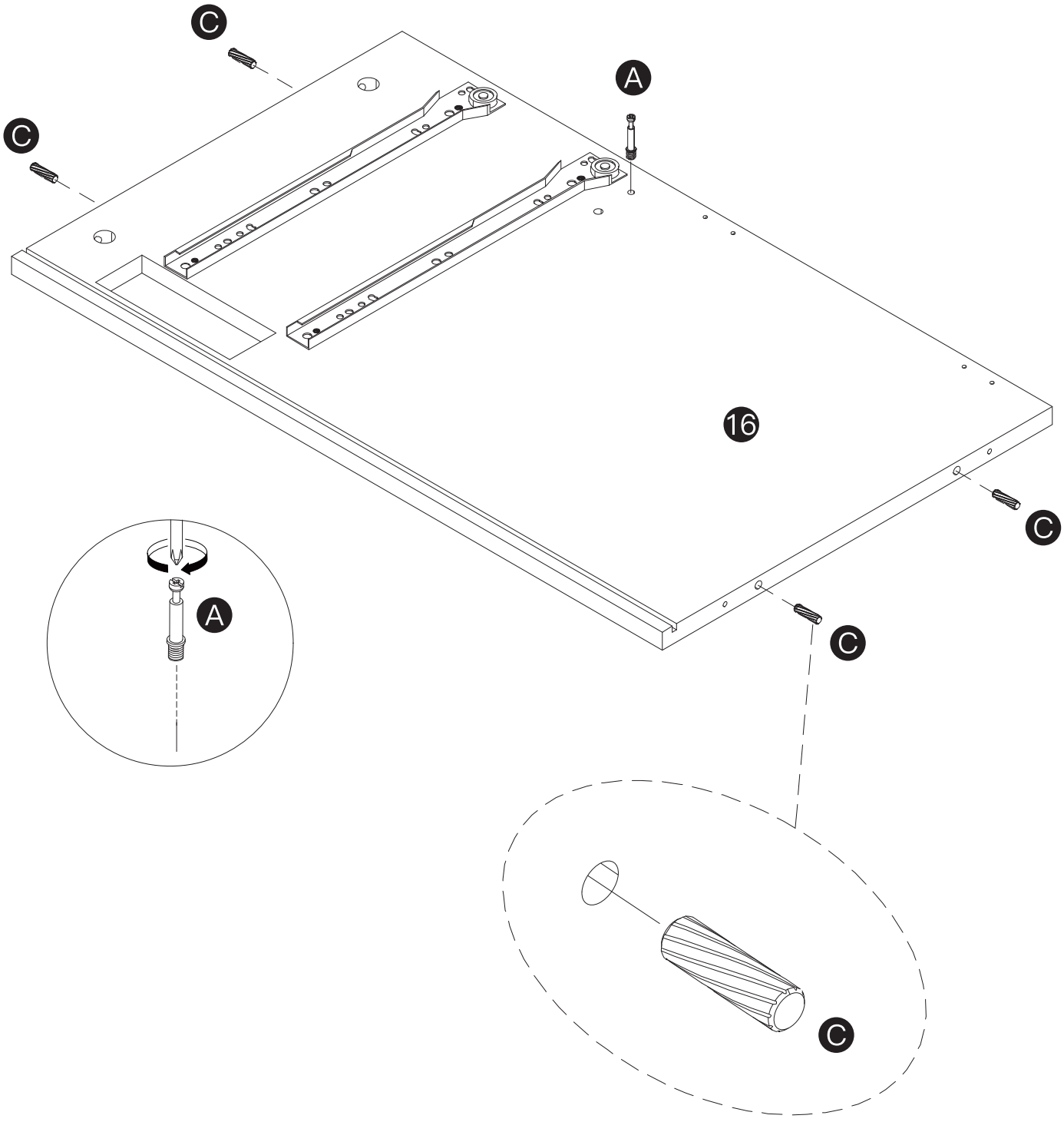

STEP 25

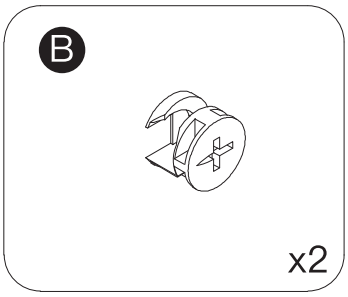

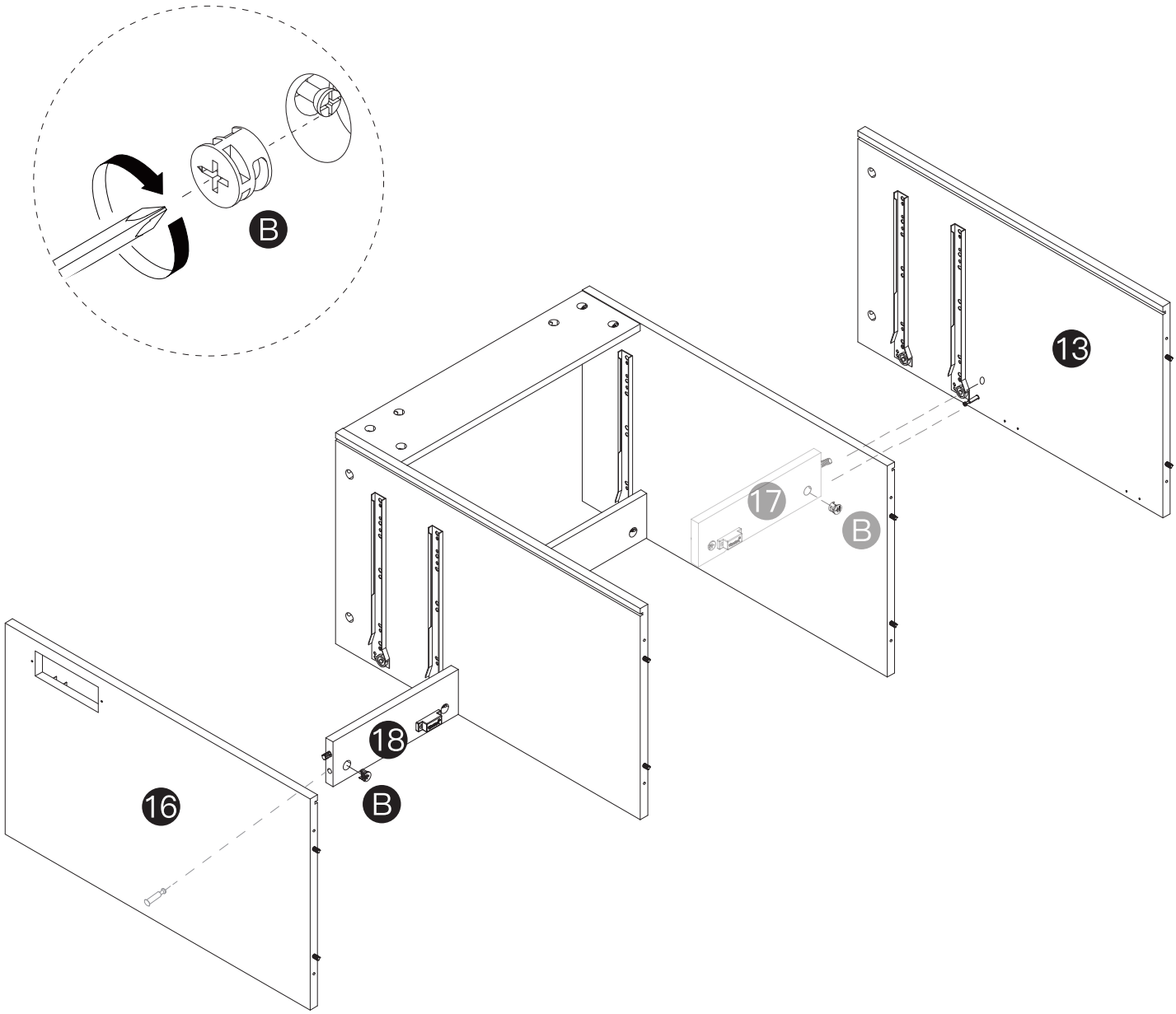

STEP 26

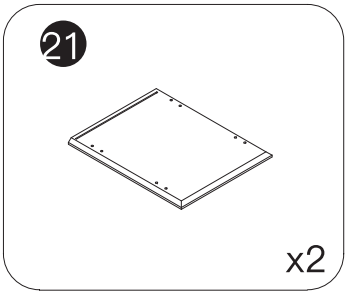

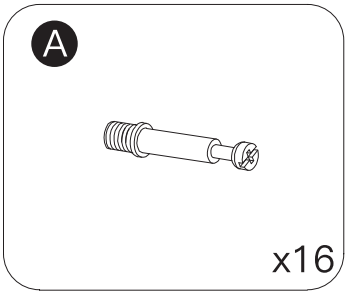

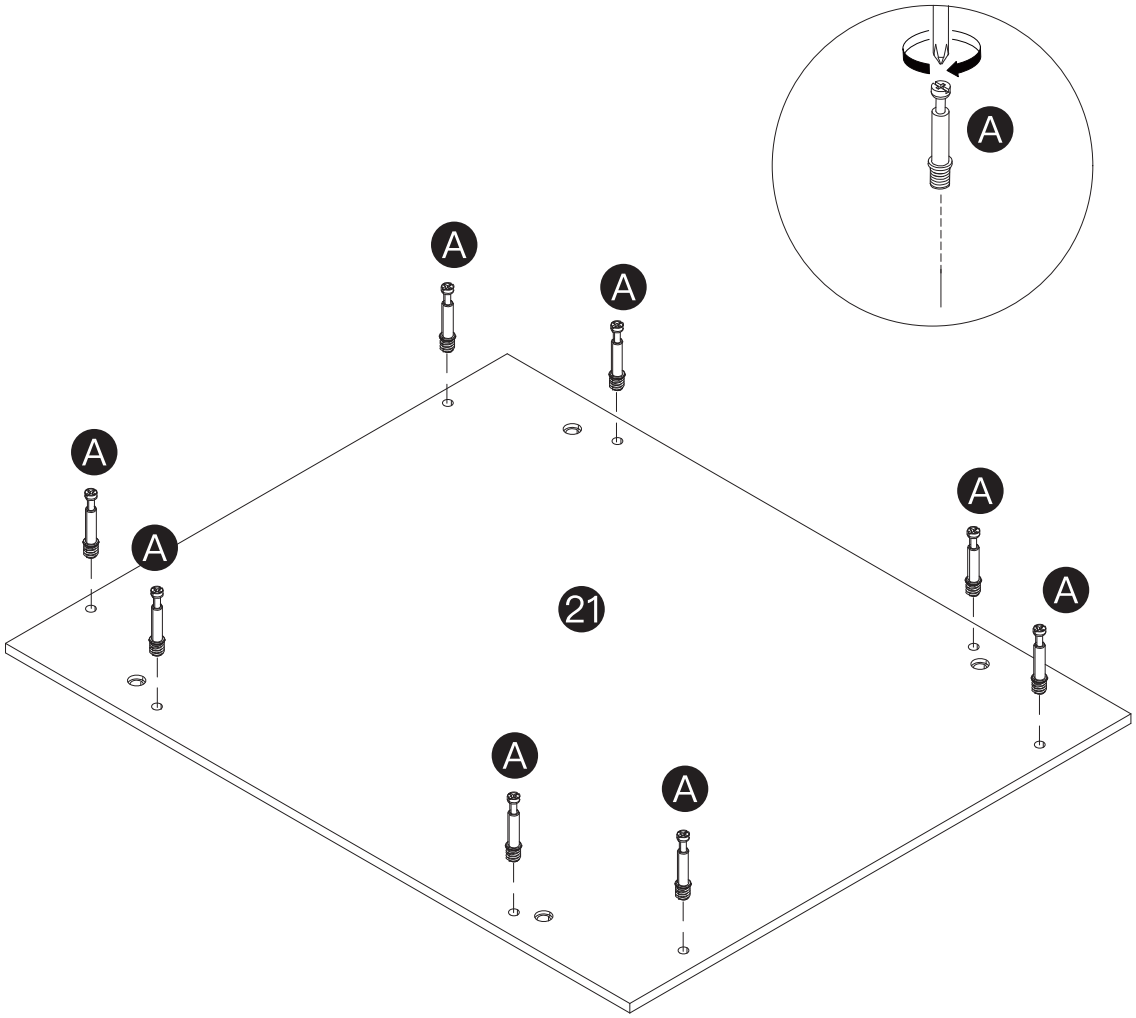

x2

STEP 27

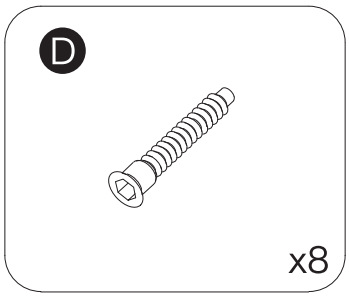

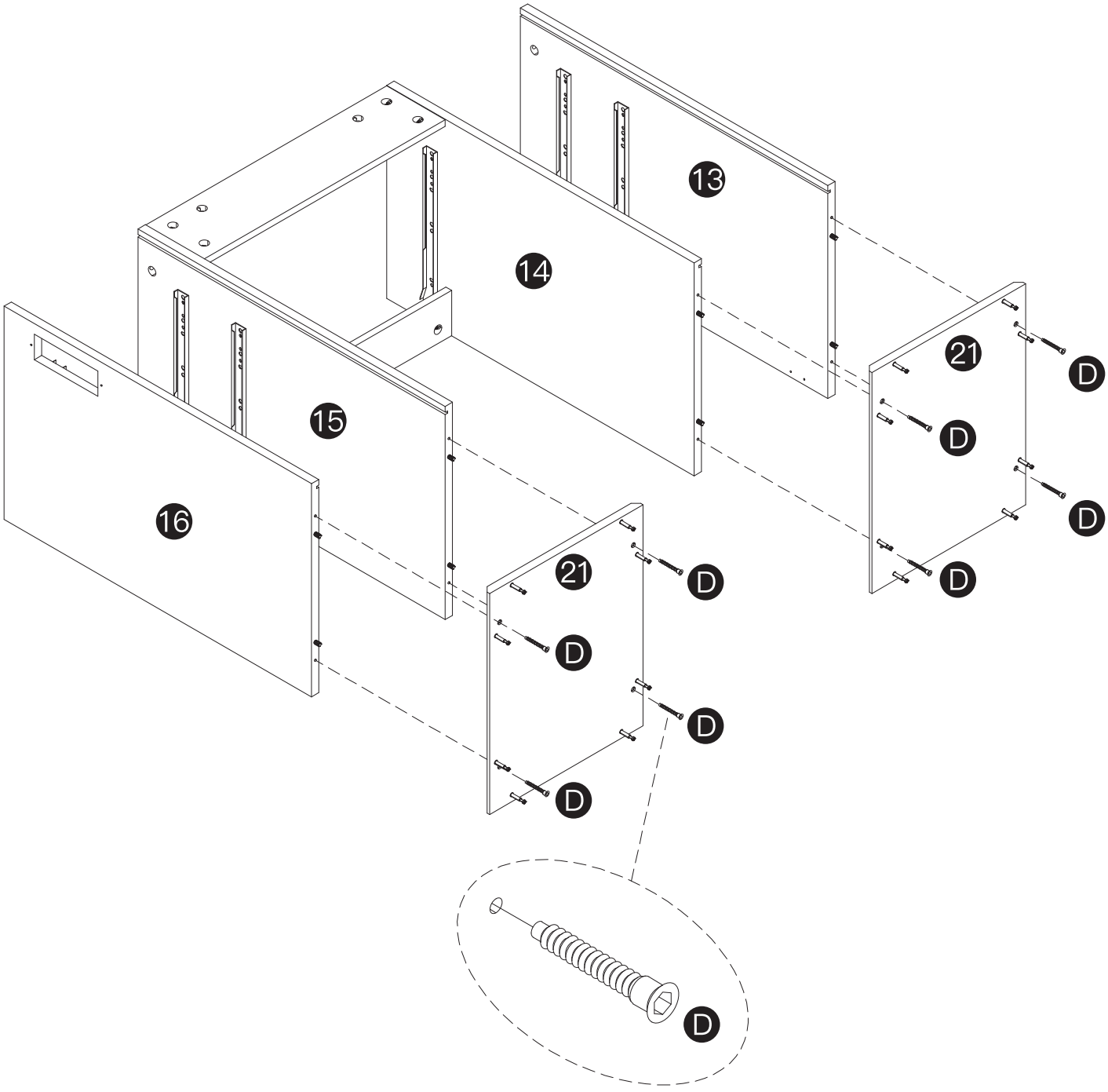

STEP 28

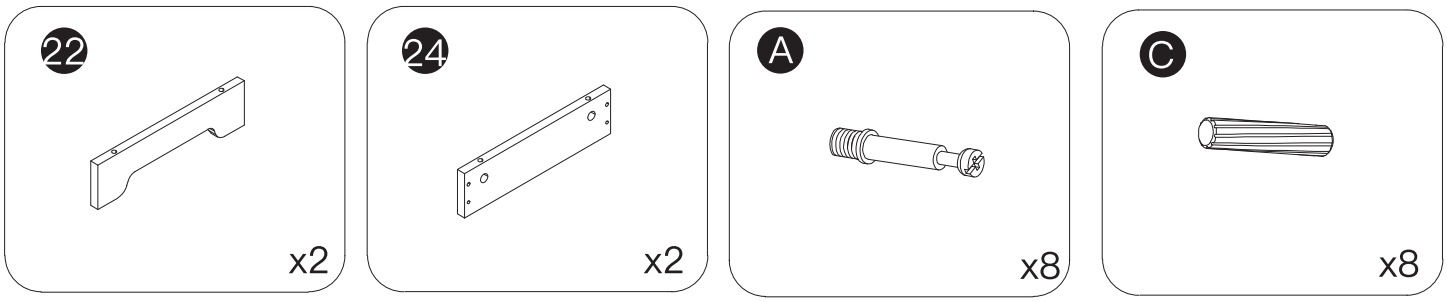

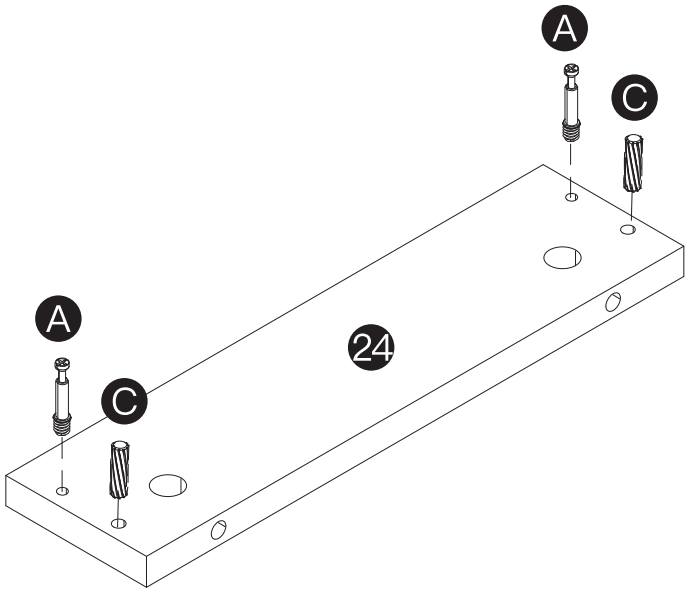

x2

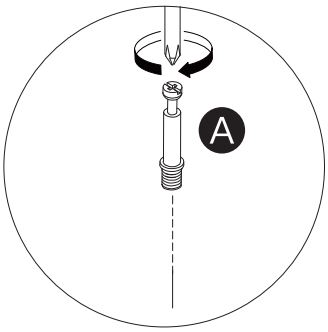

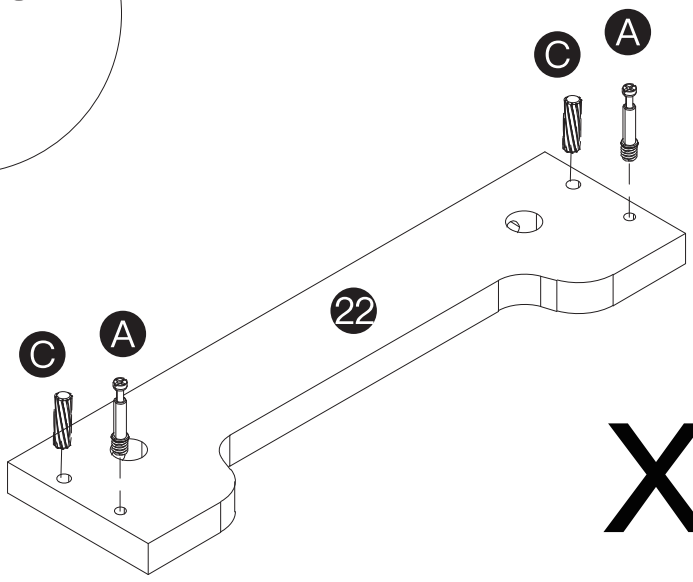

x2

STEP 29

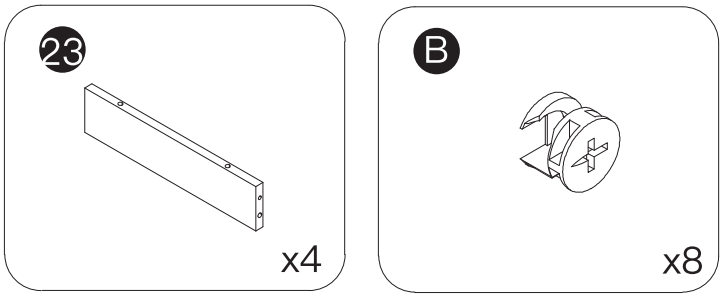

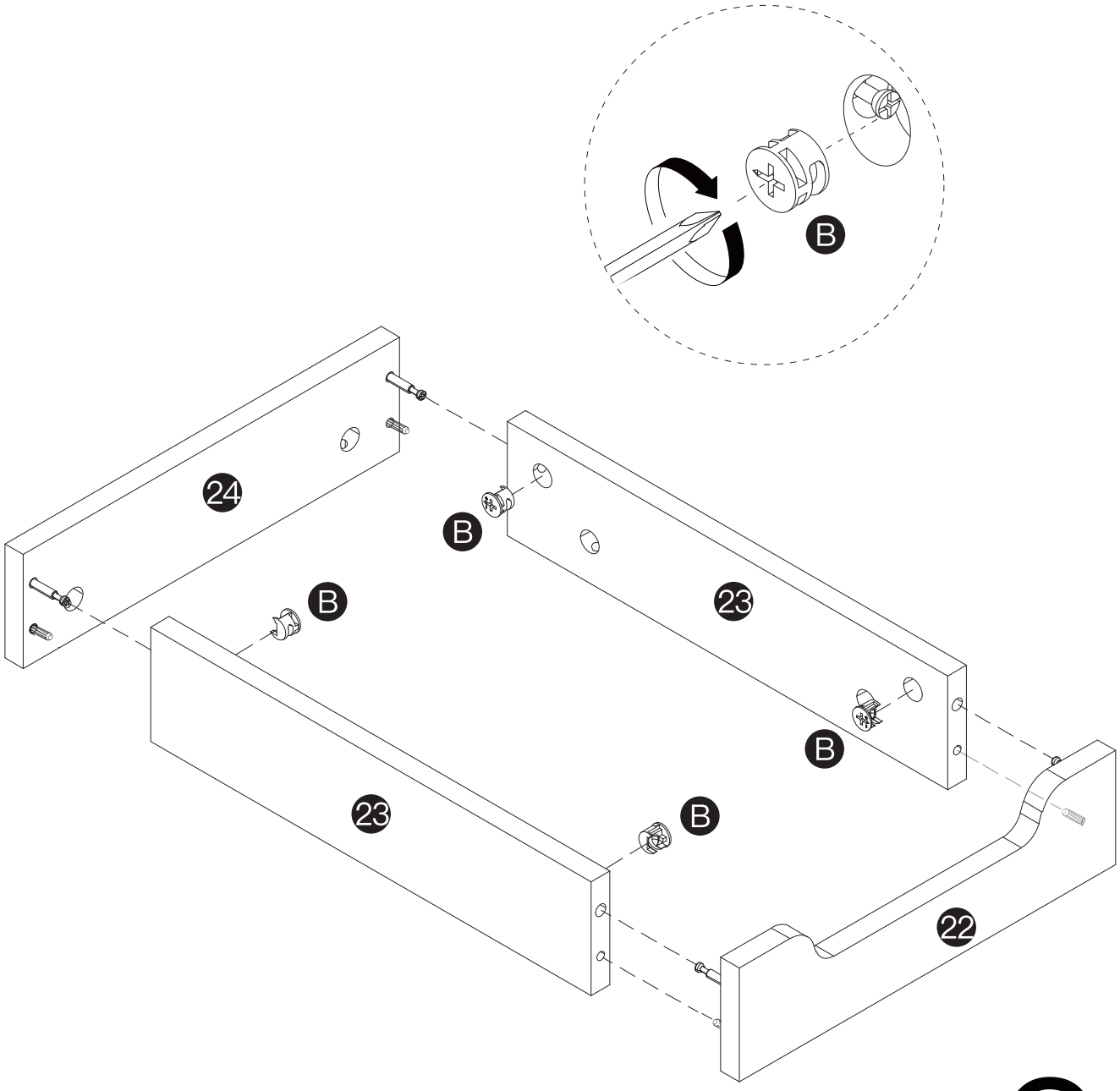

x2

STEP 30

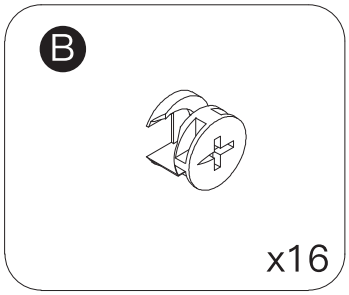

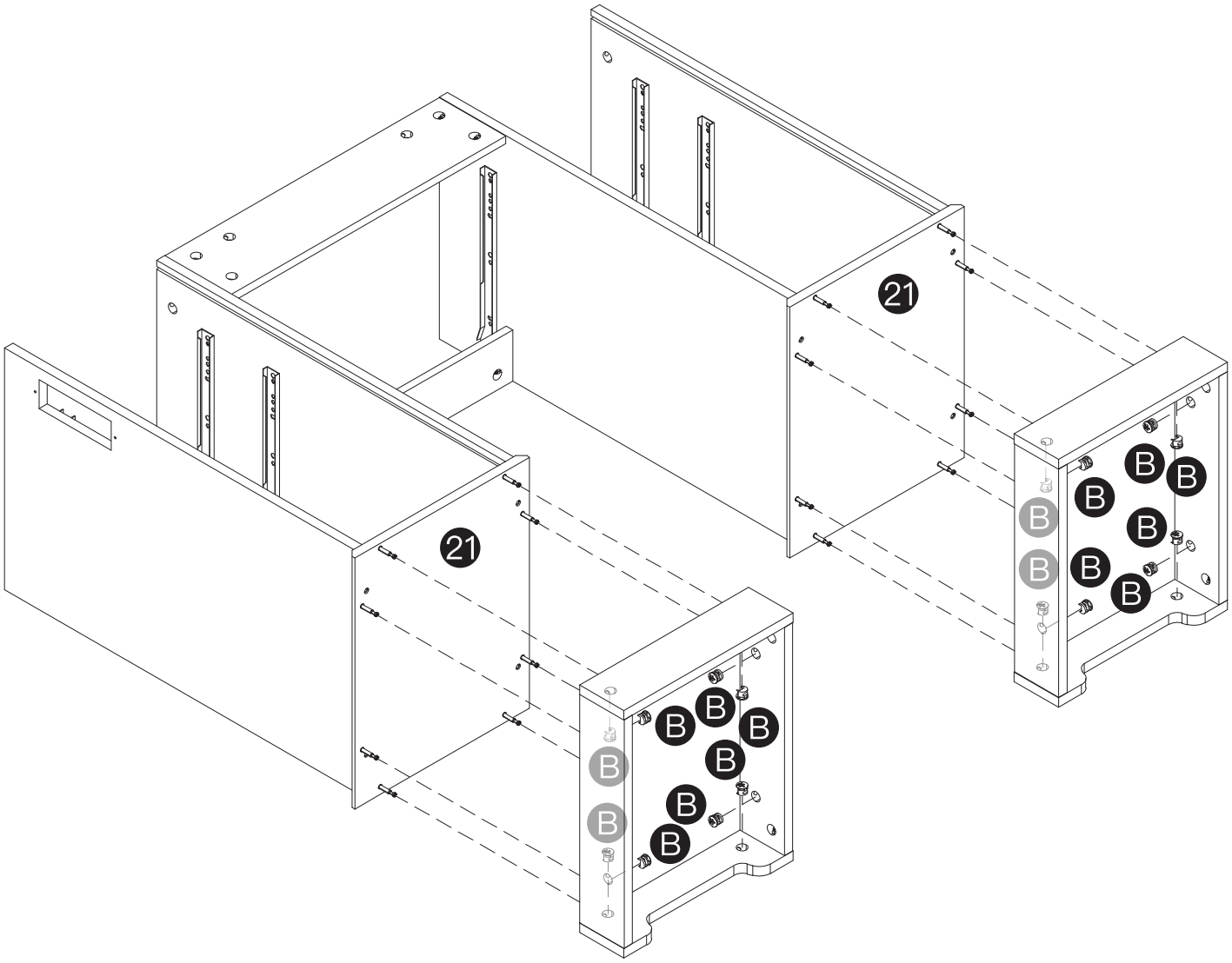

STEP 31

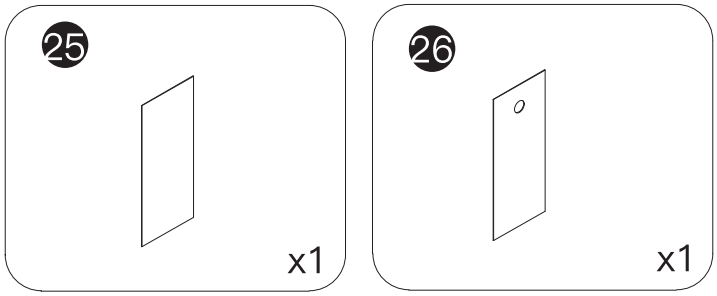

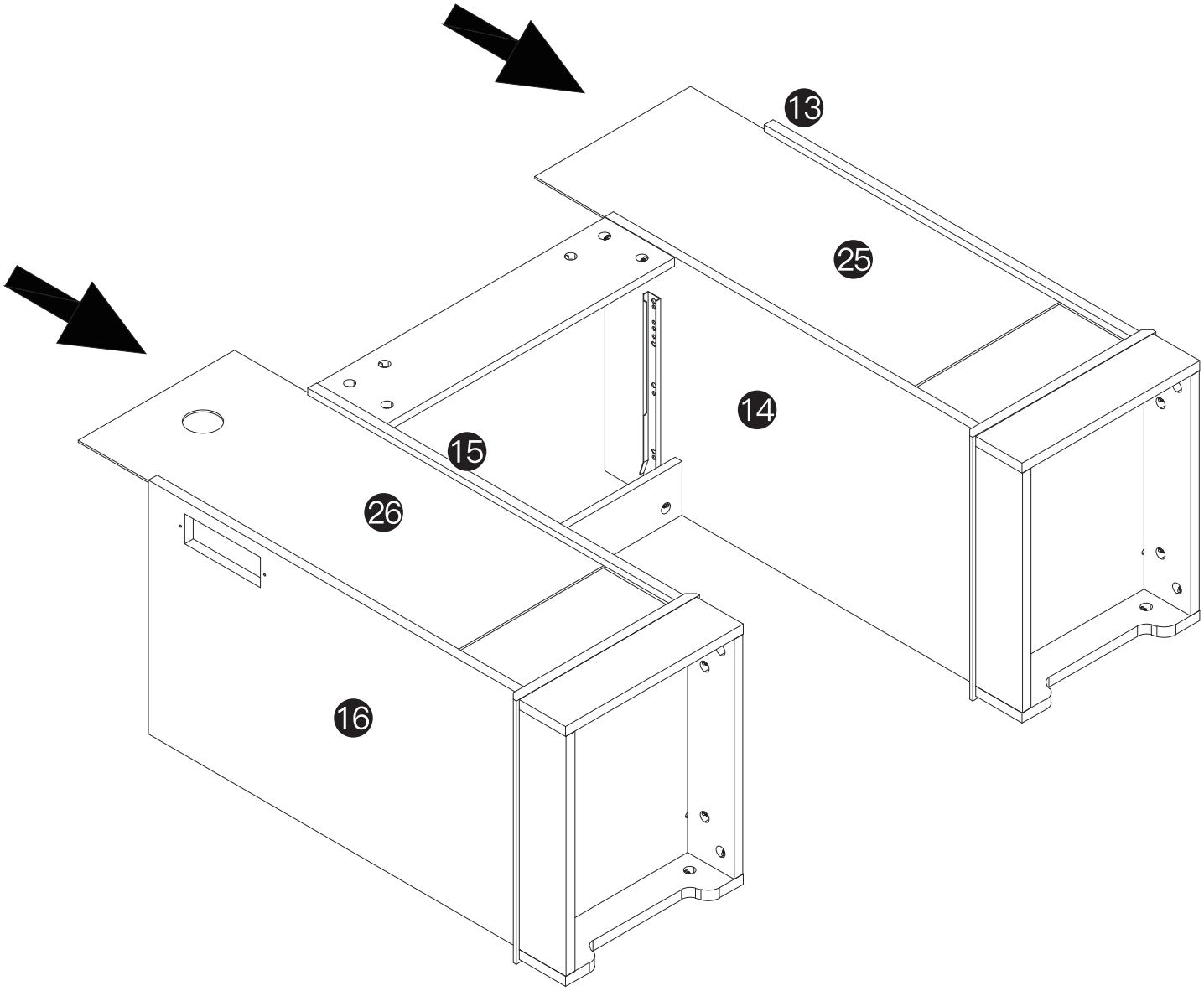

STEP 32

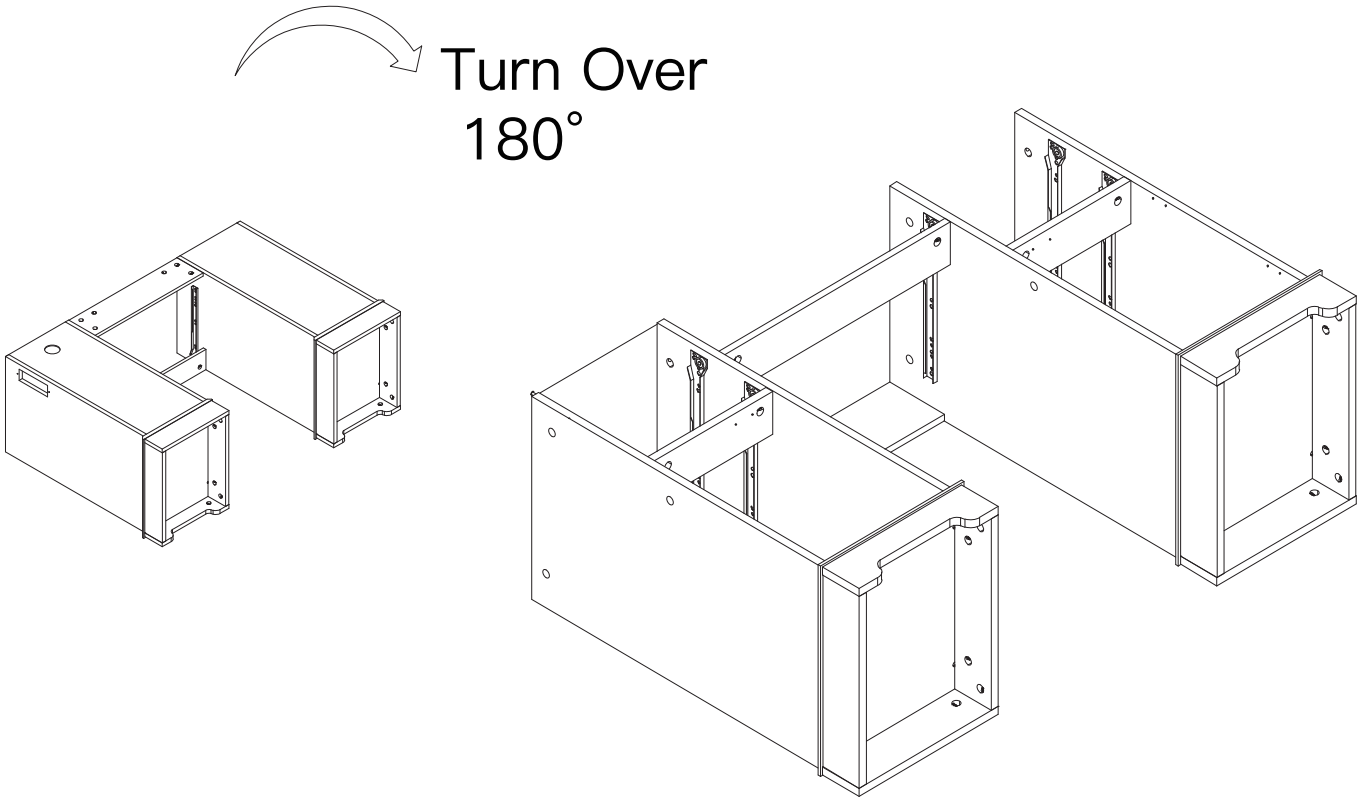

STEP 33

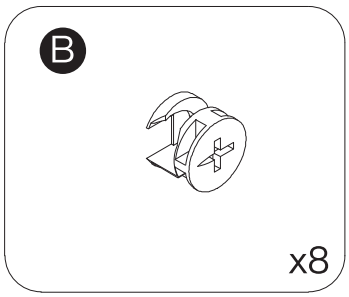

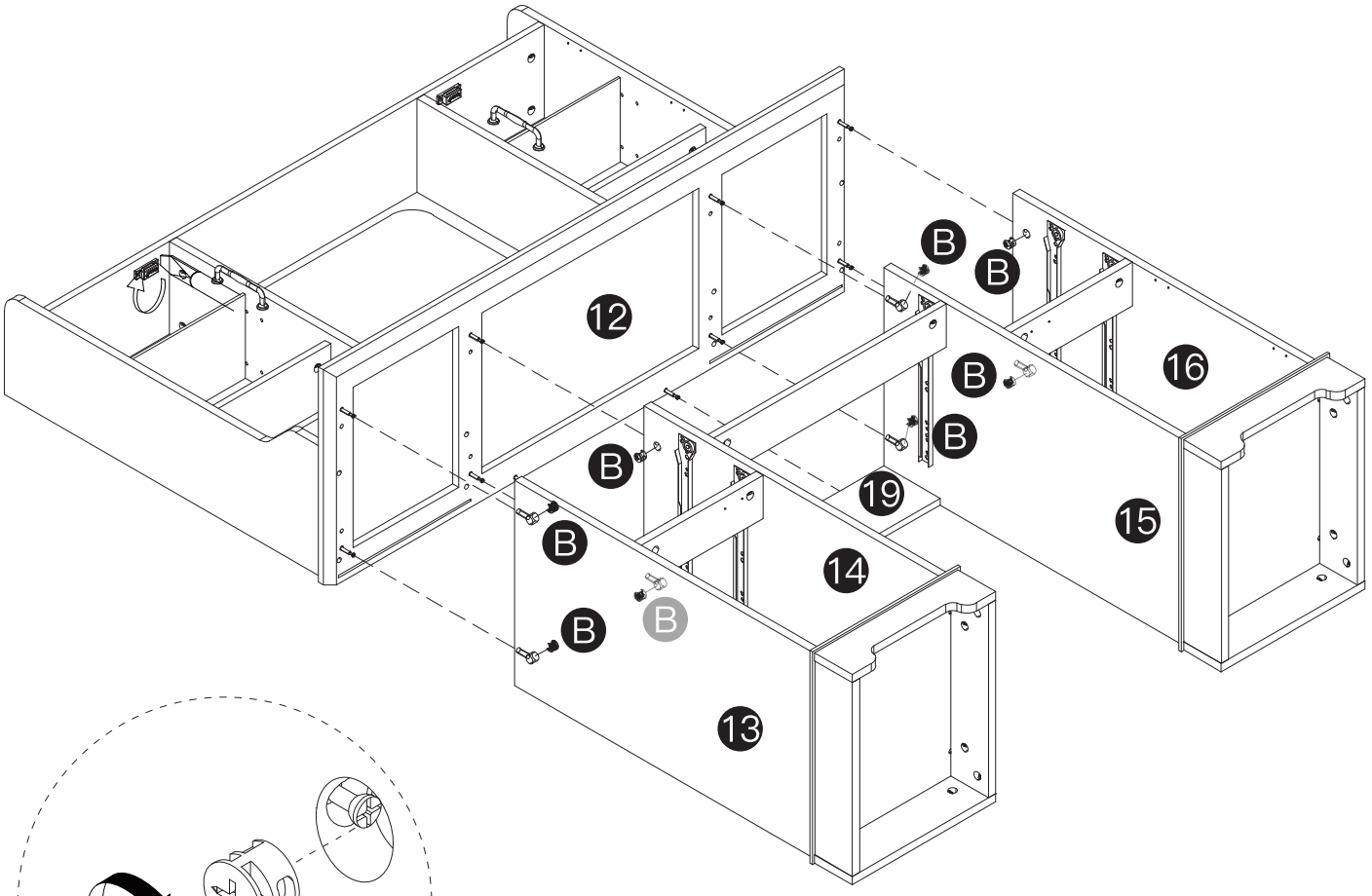

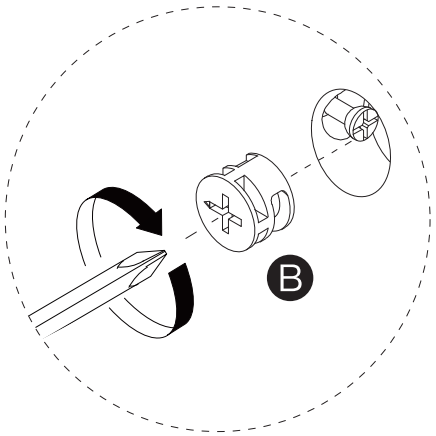

STEP 34

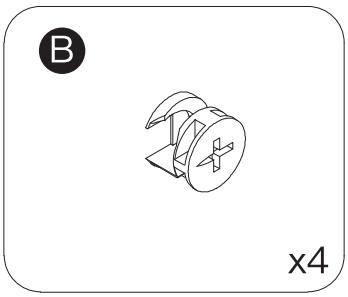

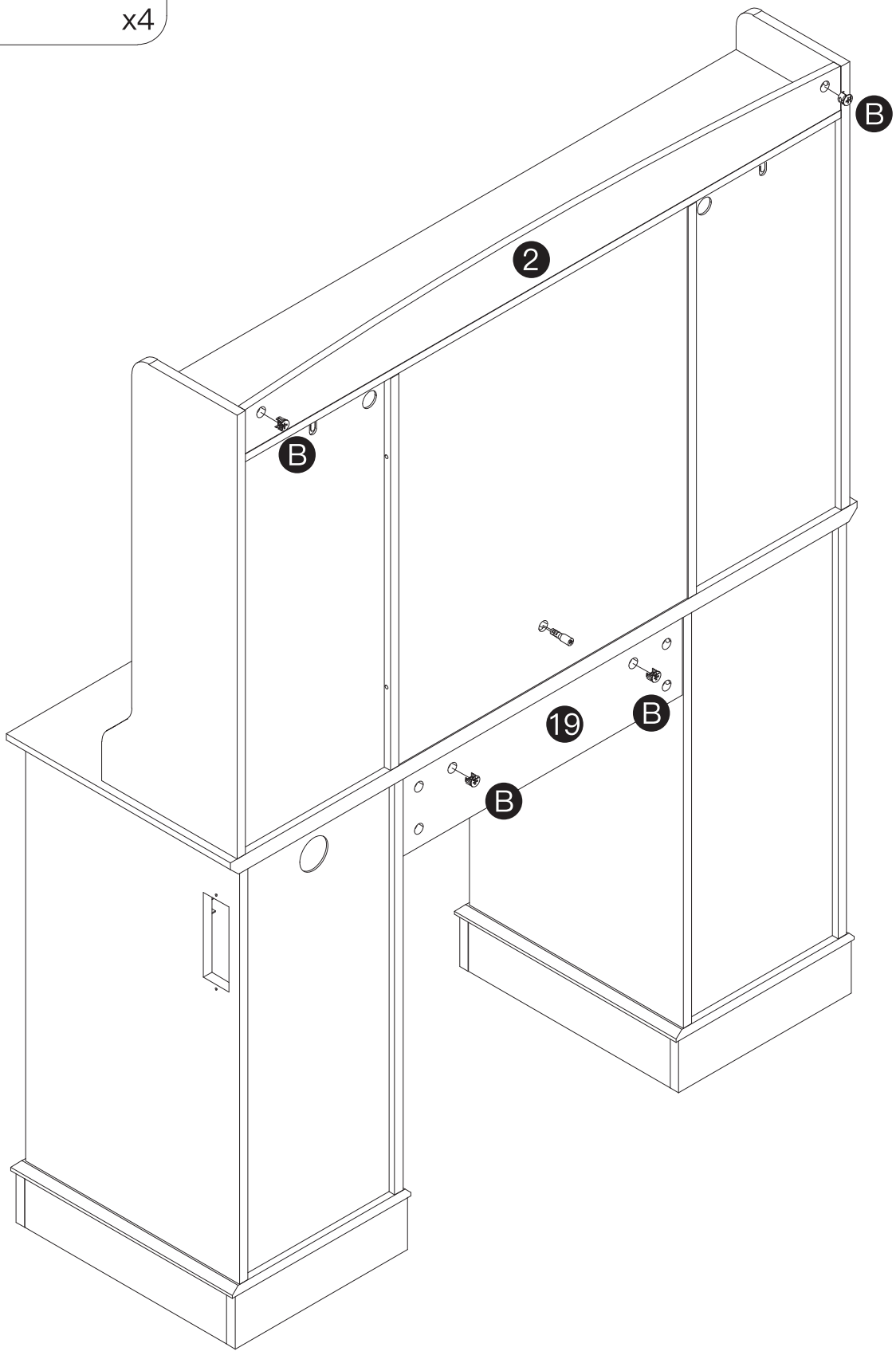

STEP 35

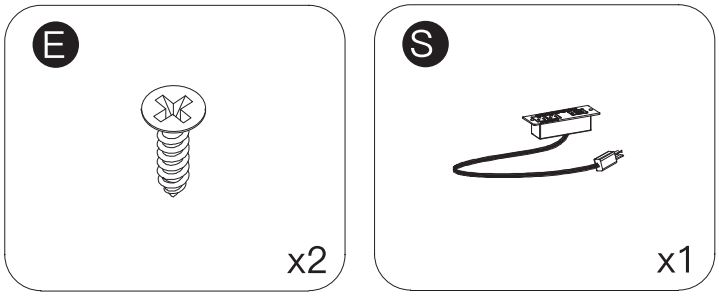

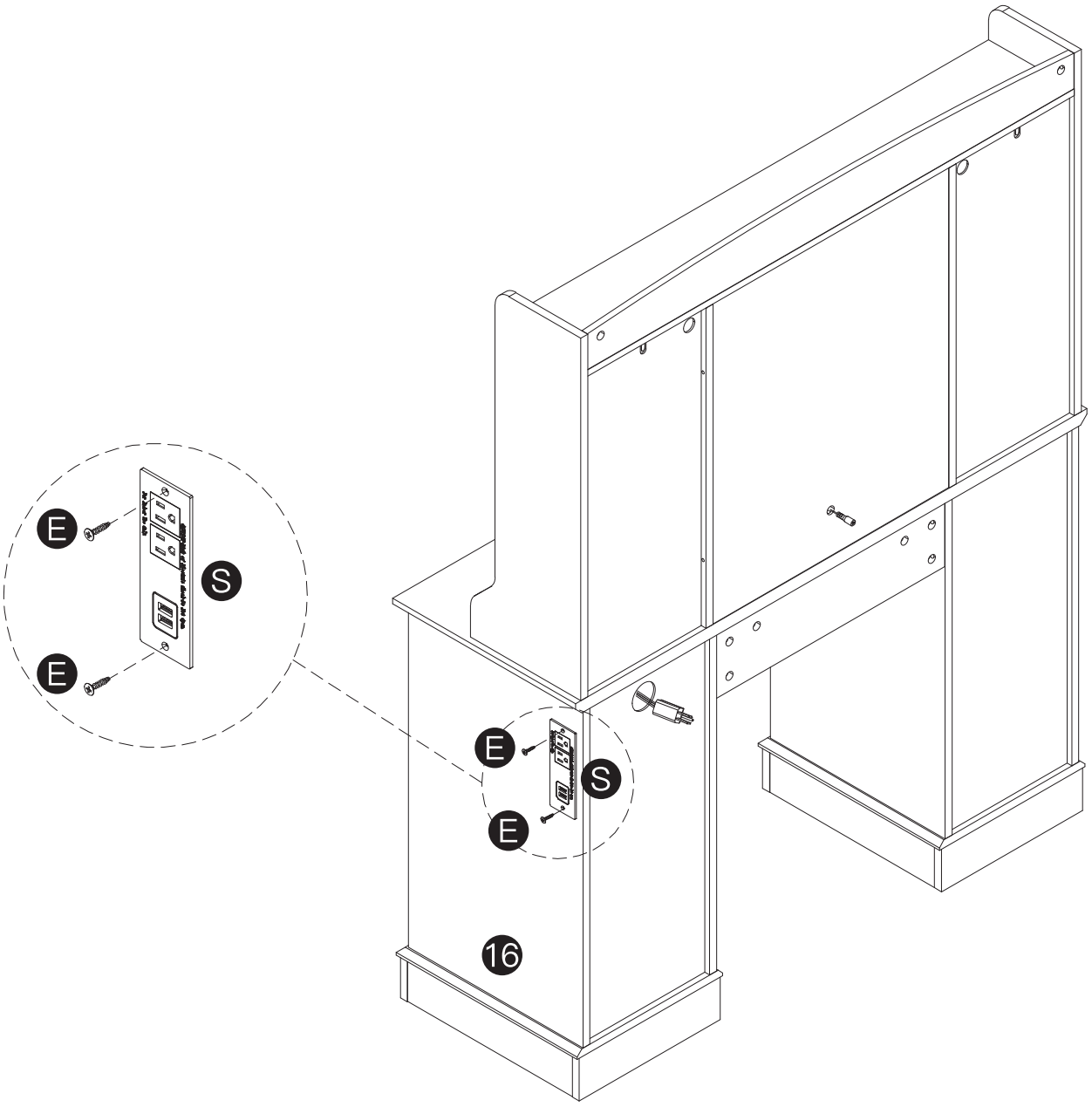

STEP 36

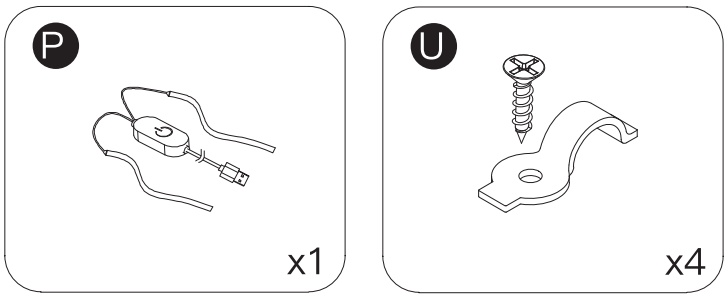

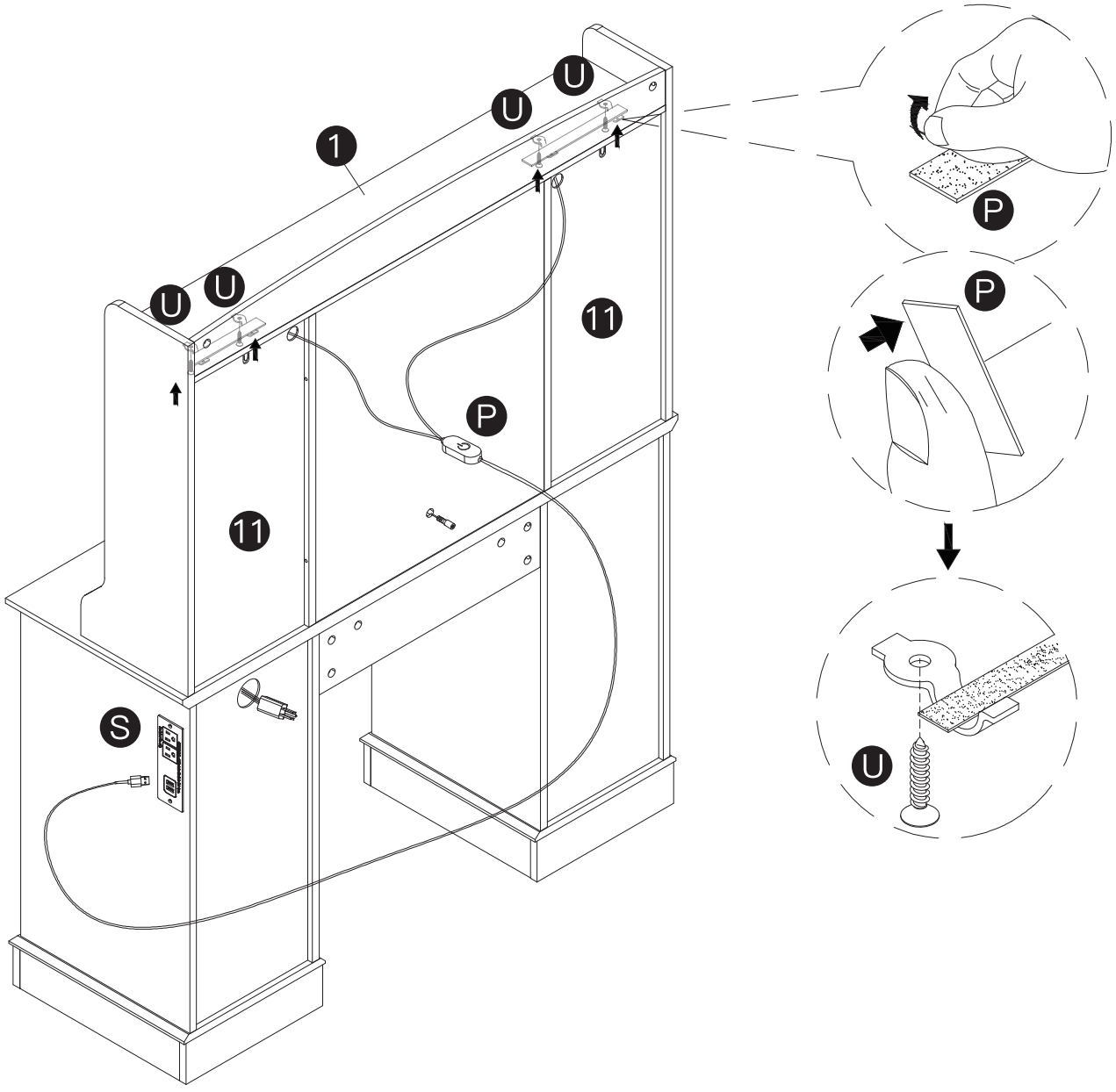

STEP 37

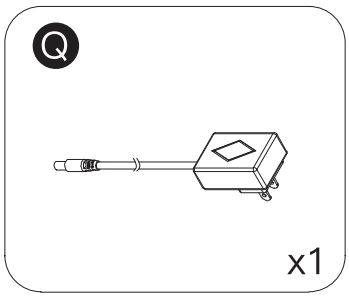

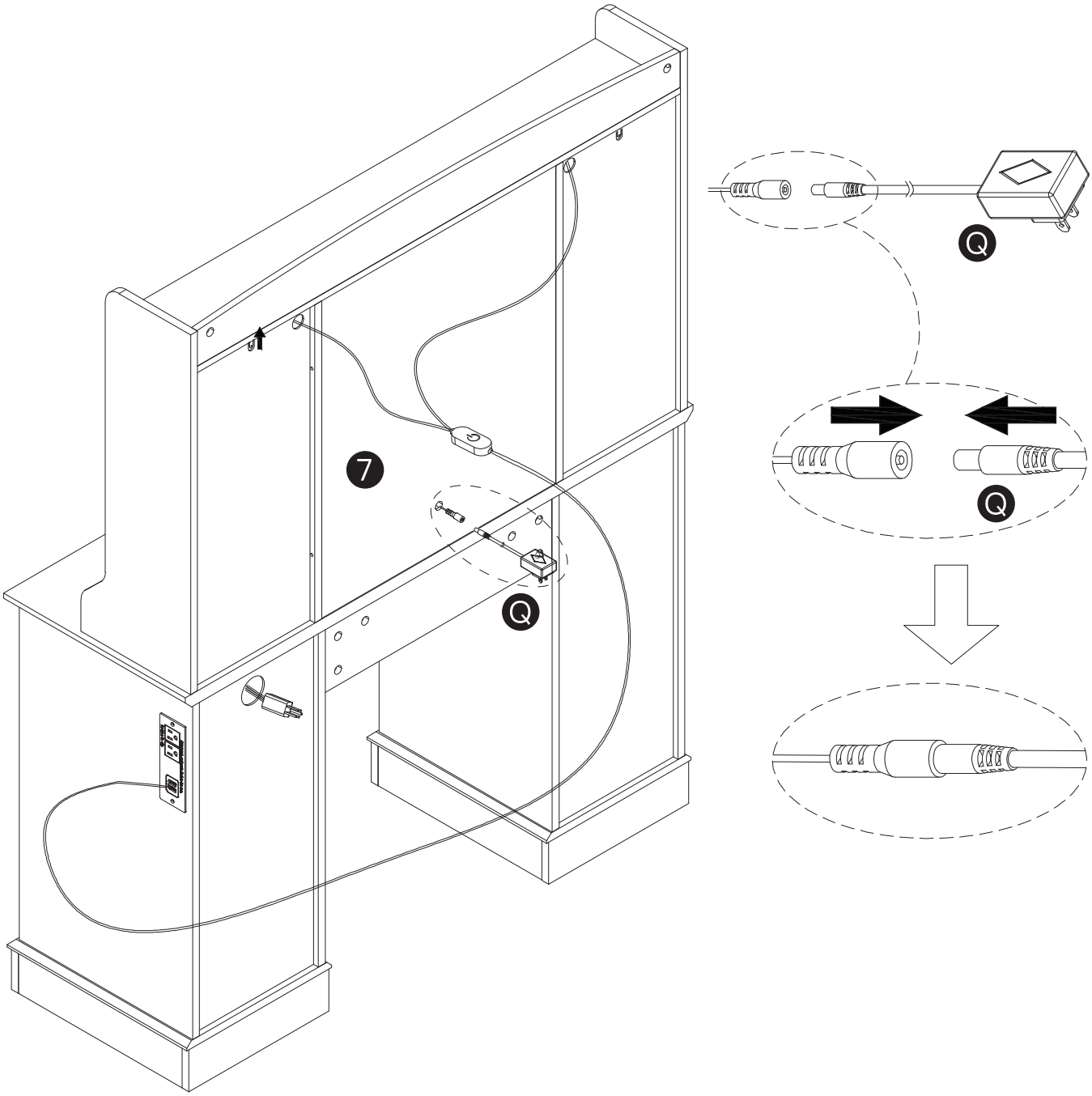

STEP 38

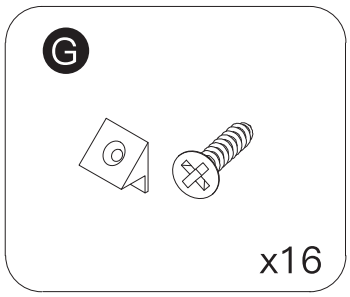

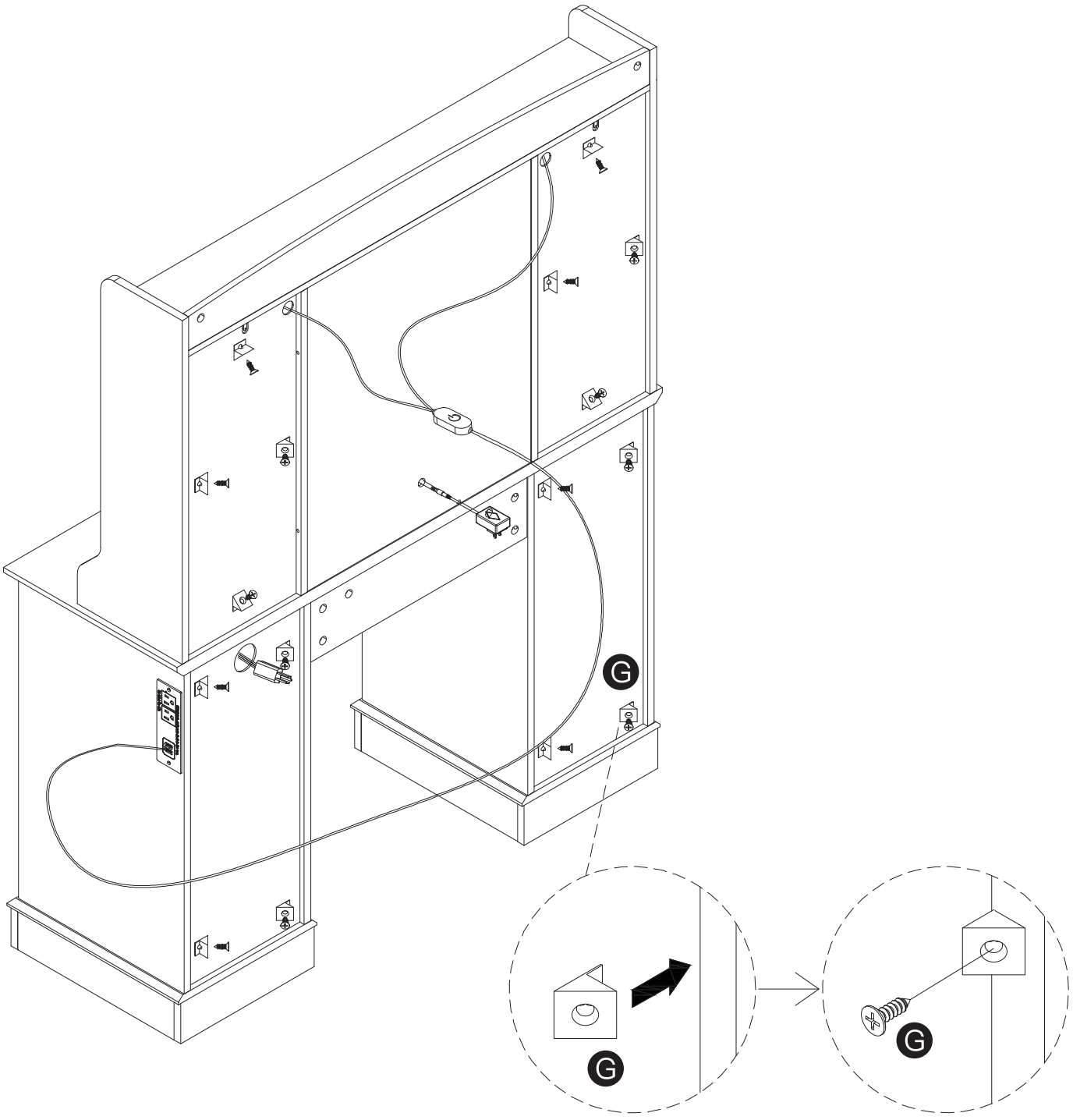

STEP 39

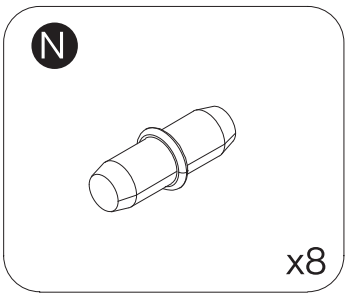

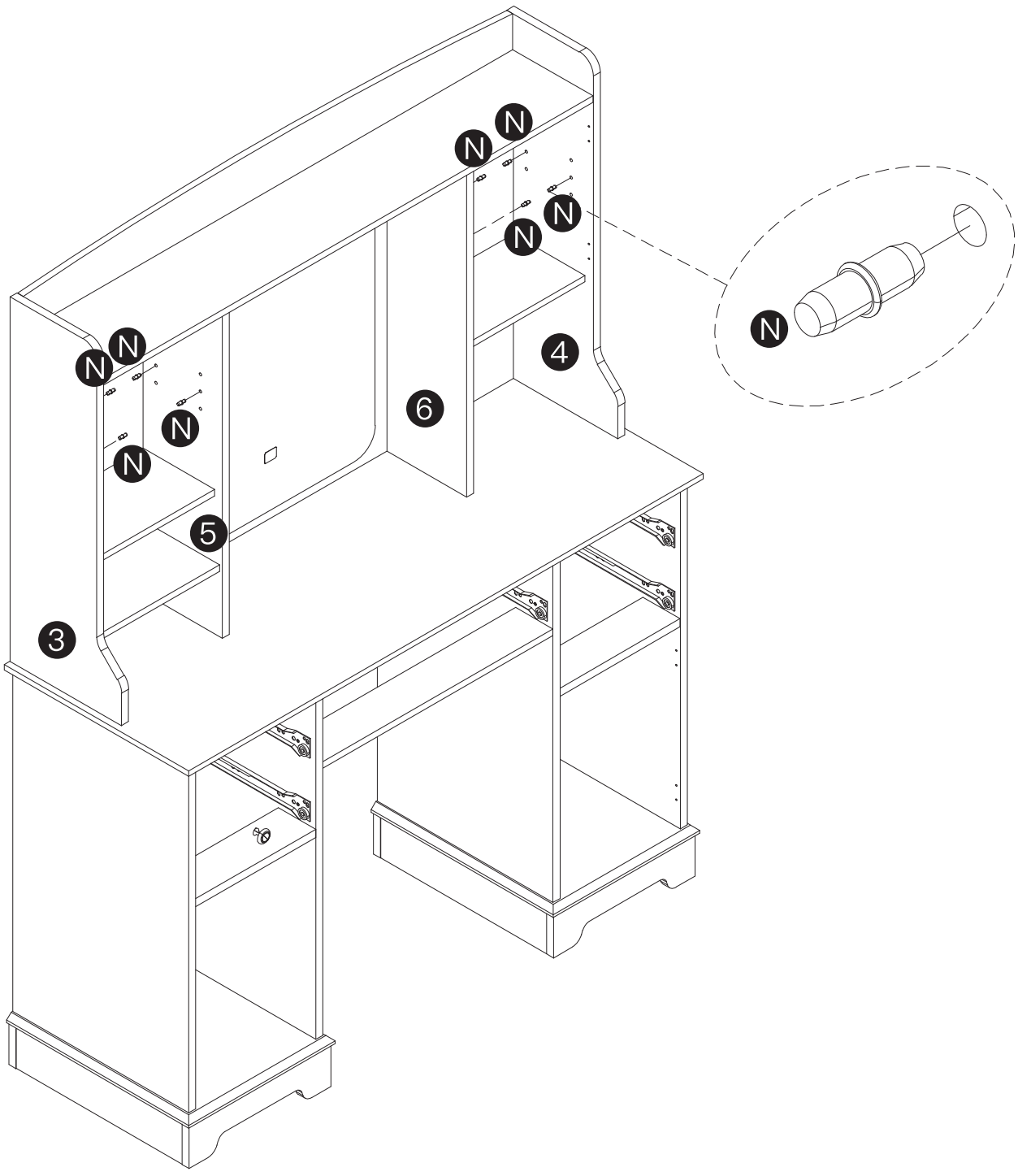

STEP 40

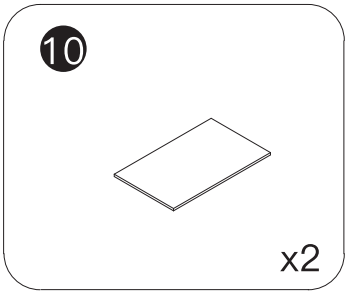

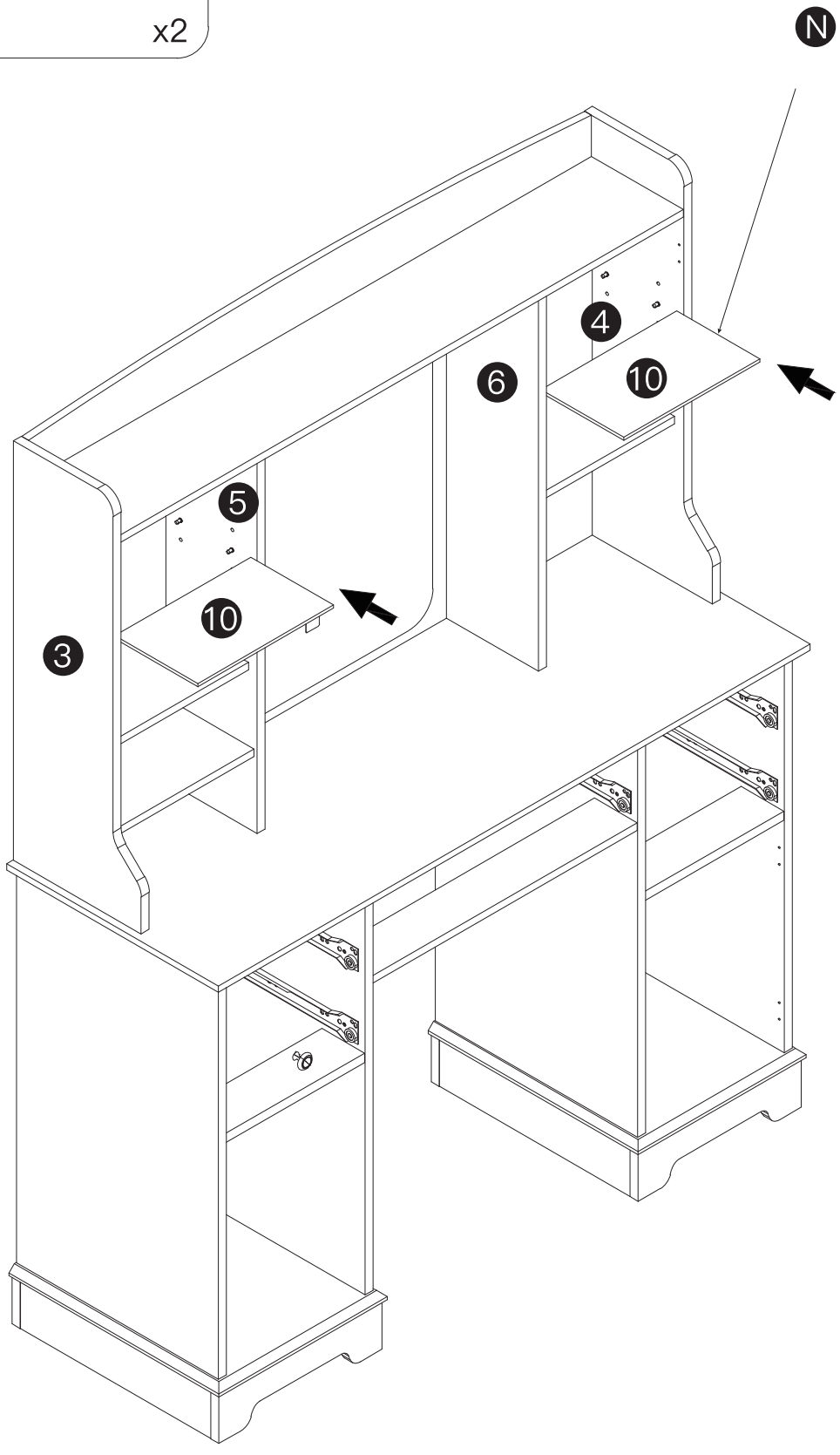

STEP 41

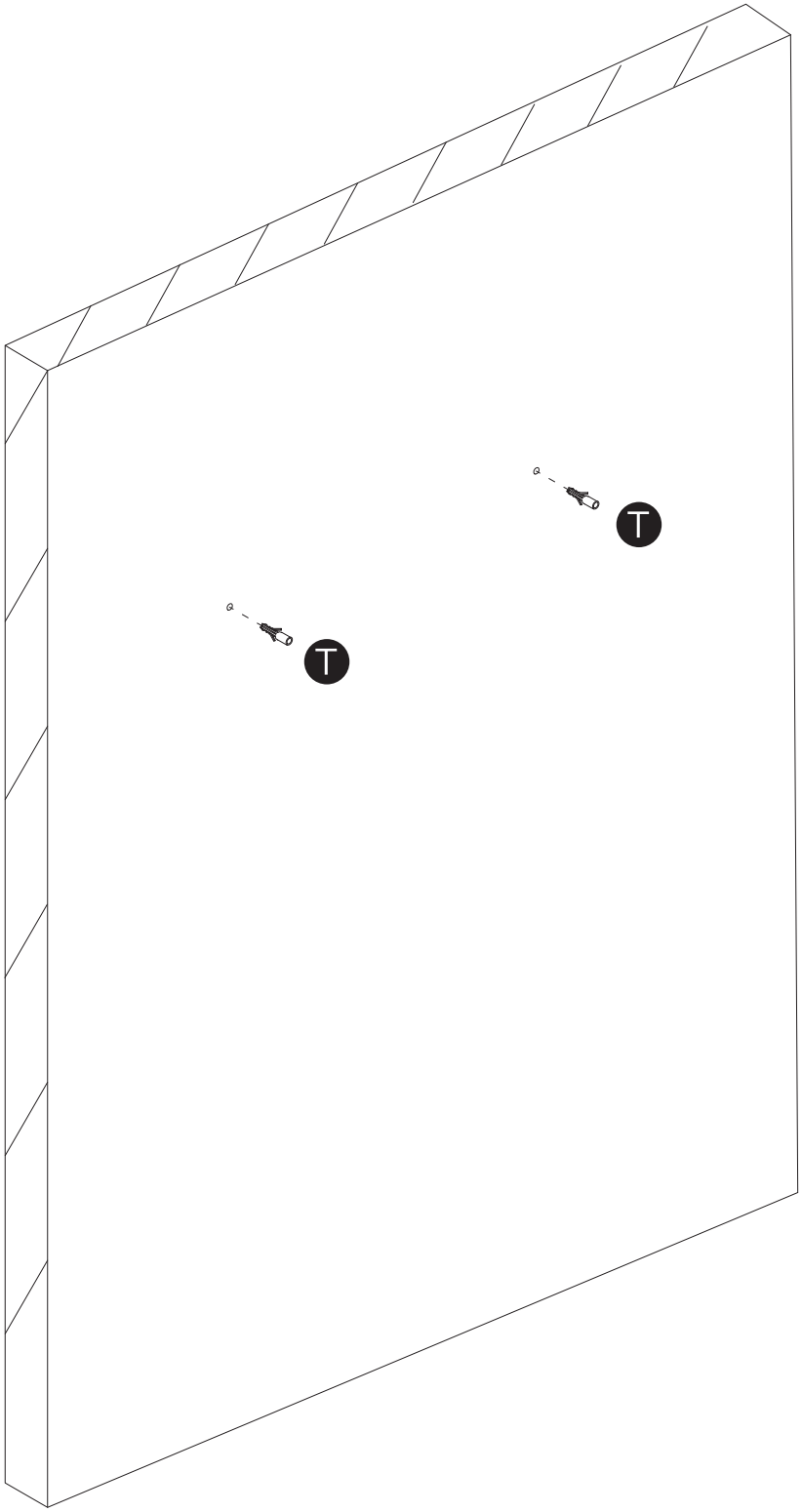

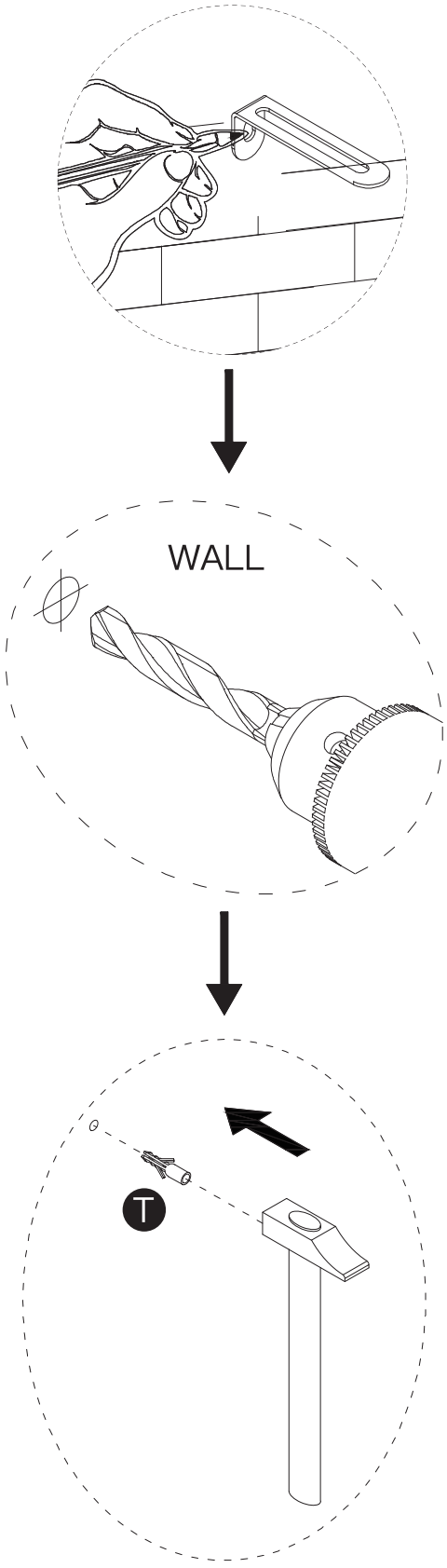

STEP 42

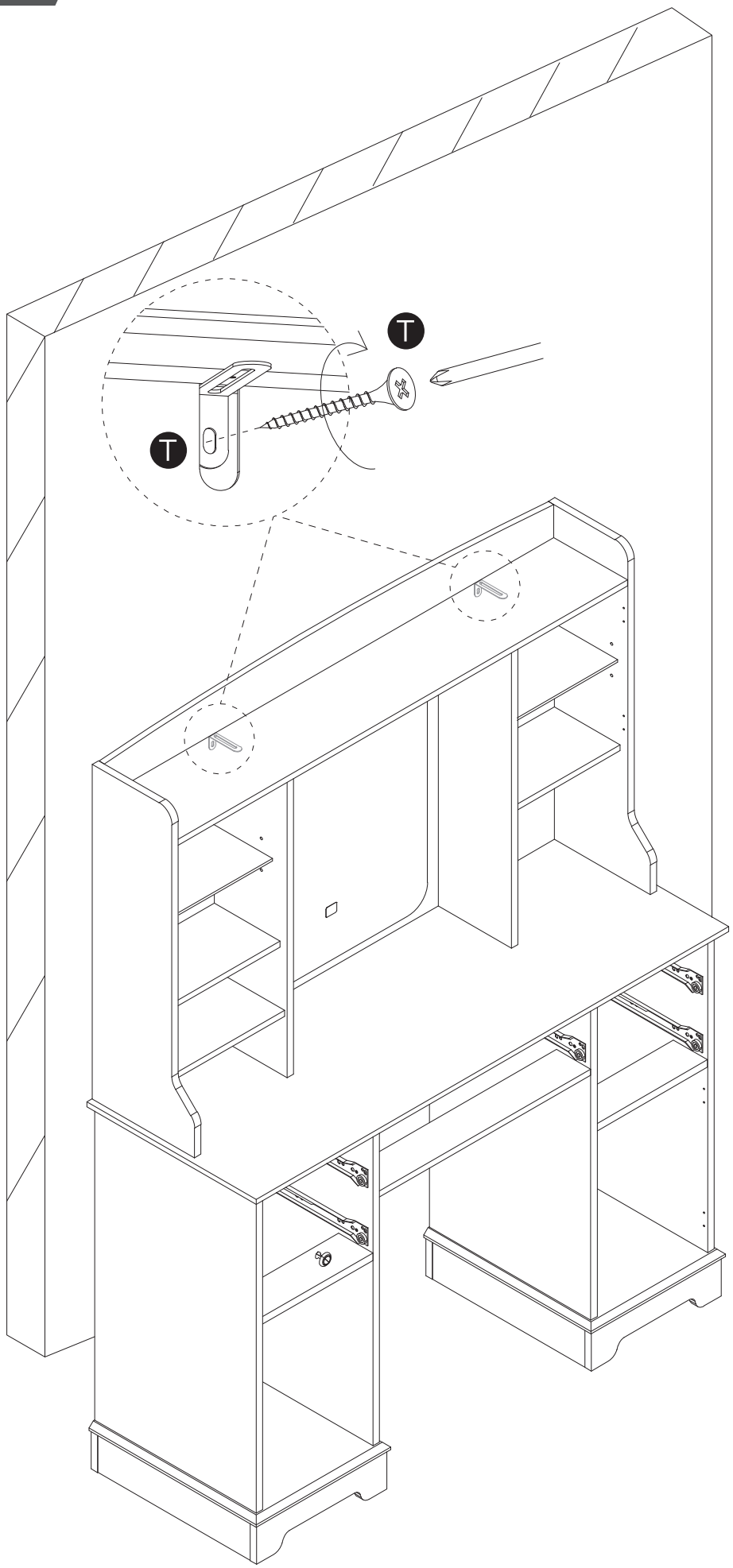

STEP 43

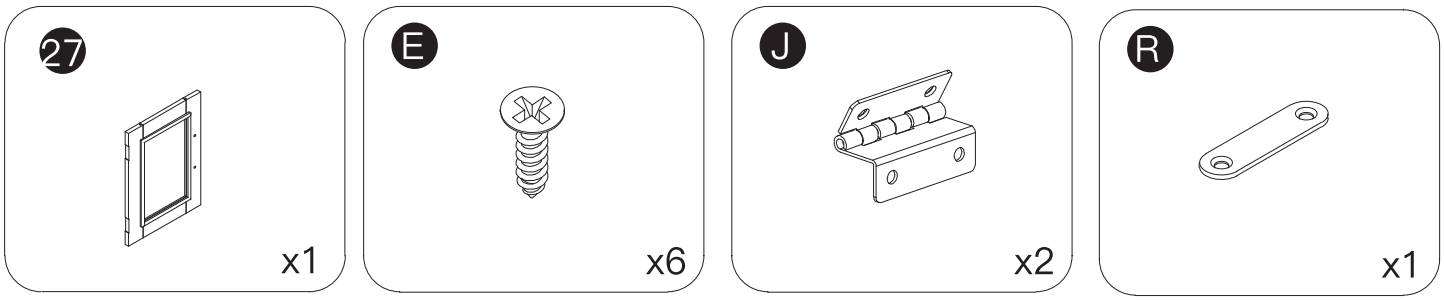

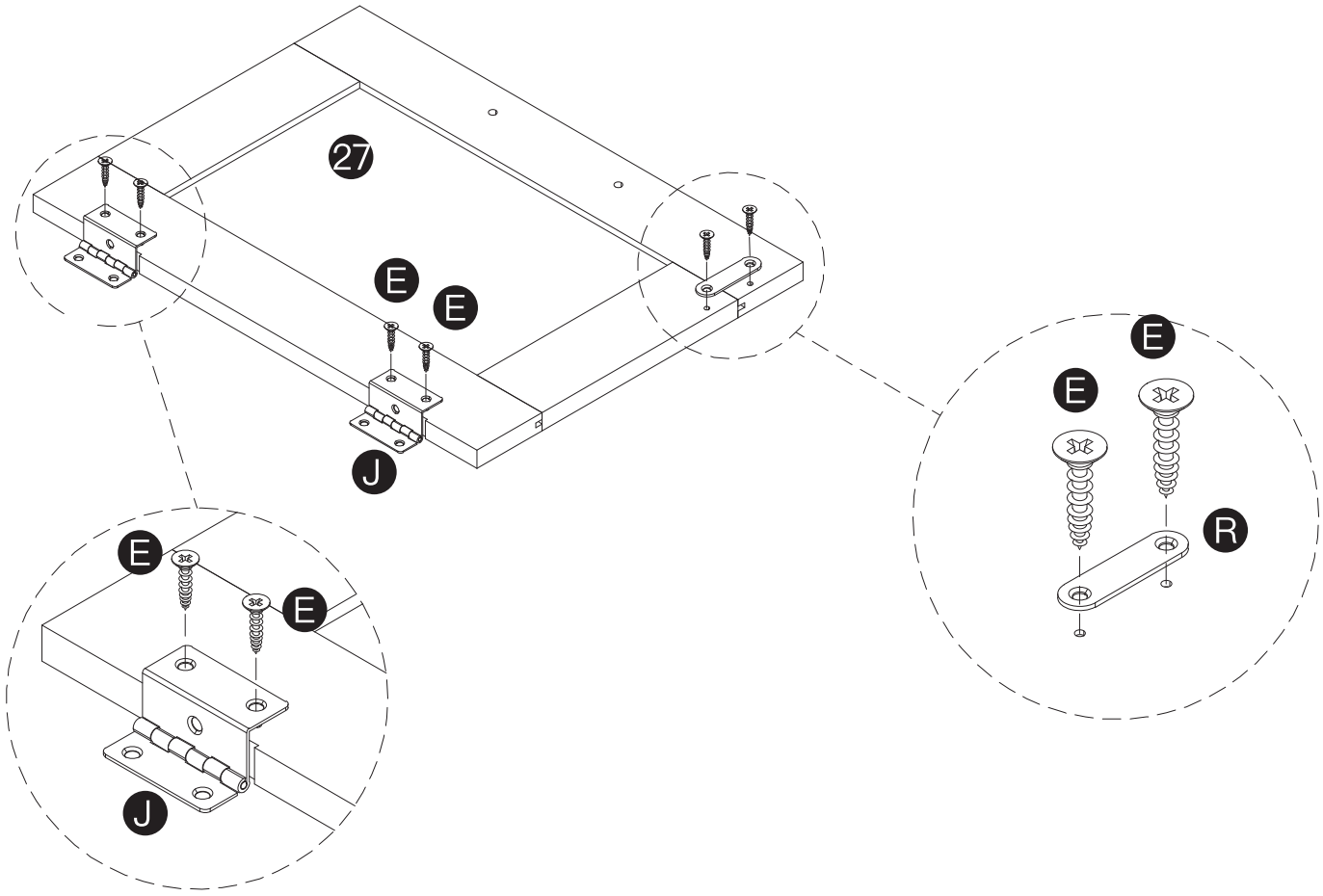

STEP 44

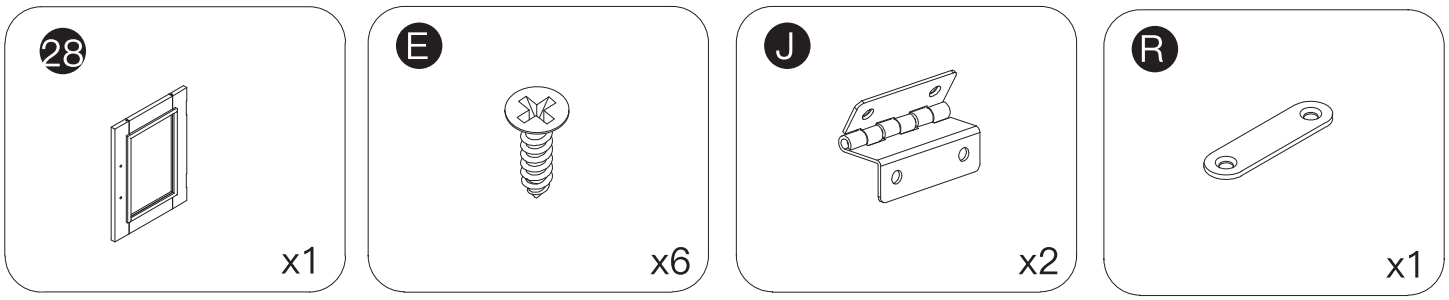

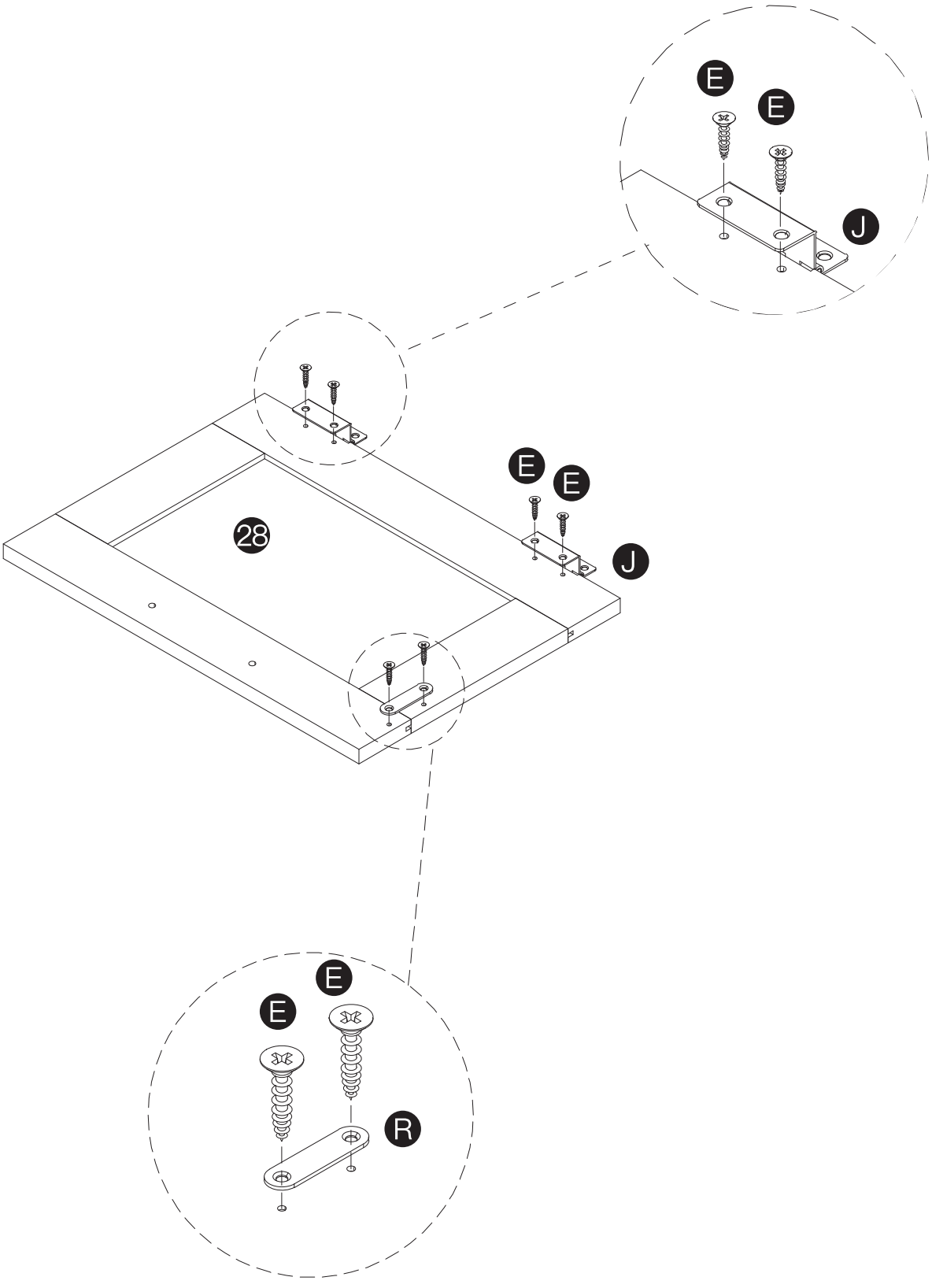

STEP 45

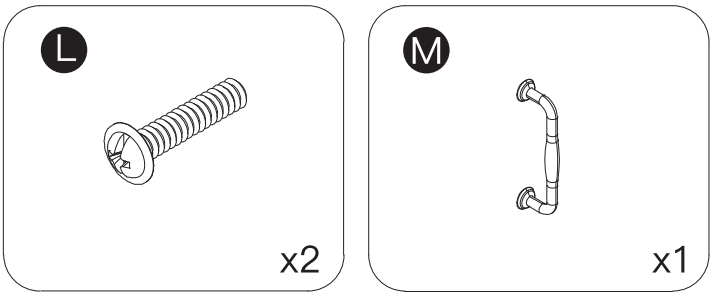

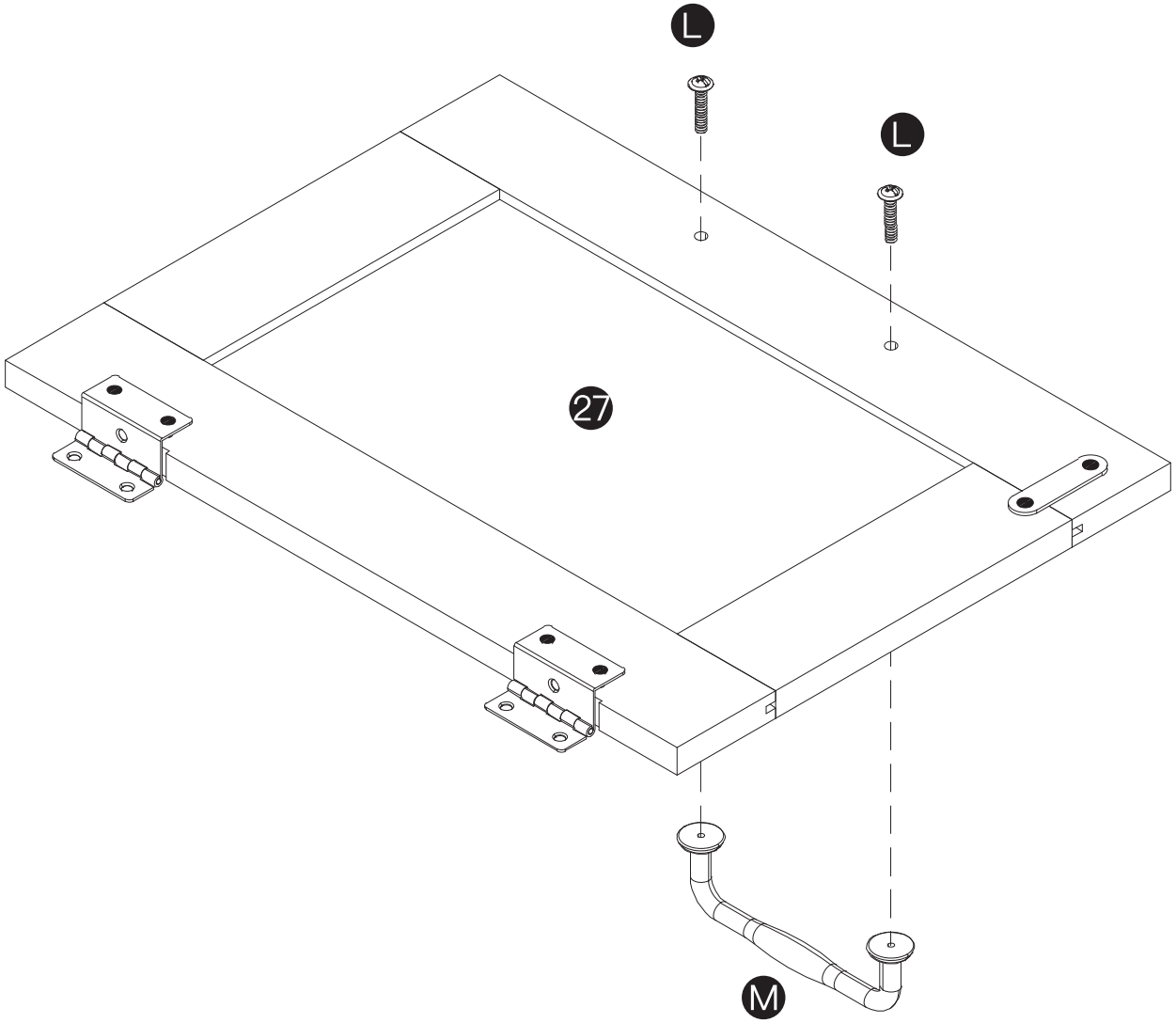

STEP 46

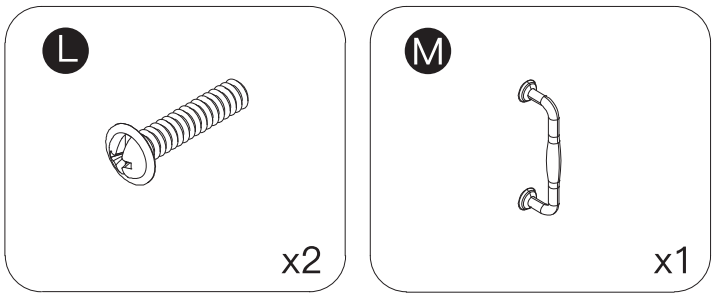

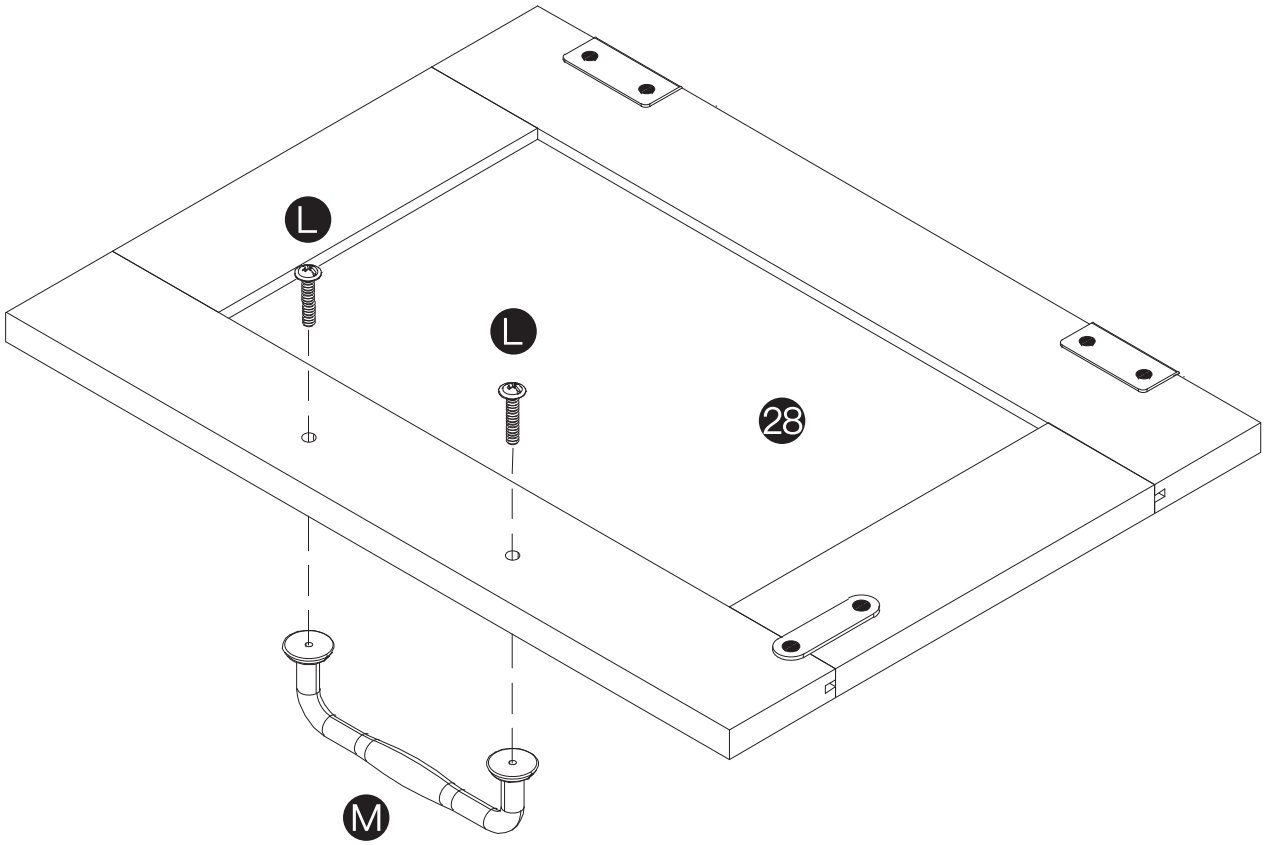

STEP 47

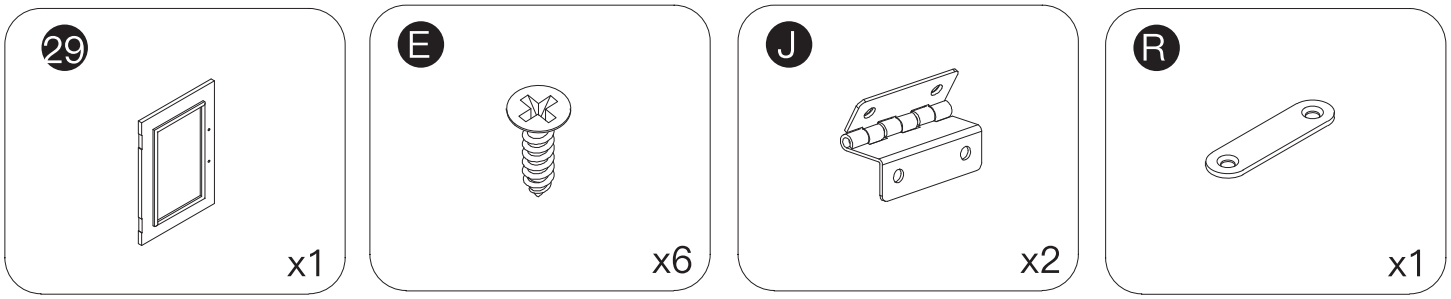

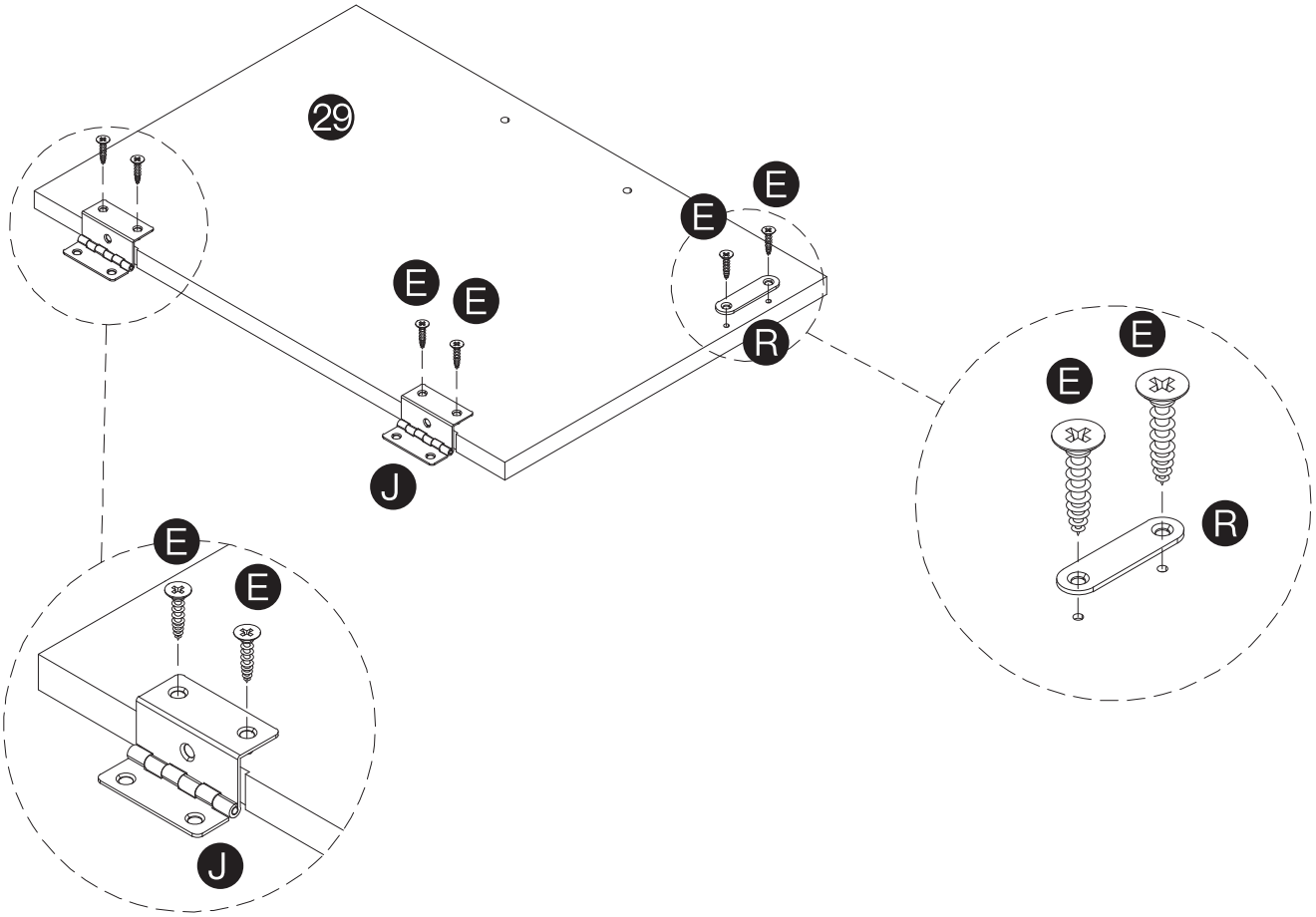

STEP 48

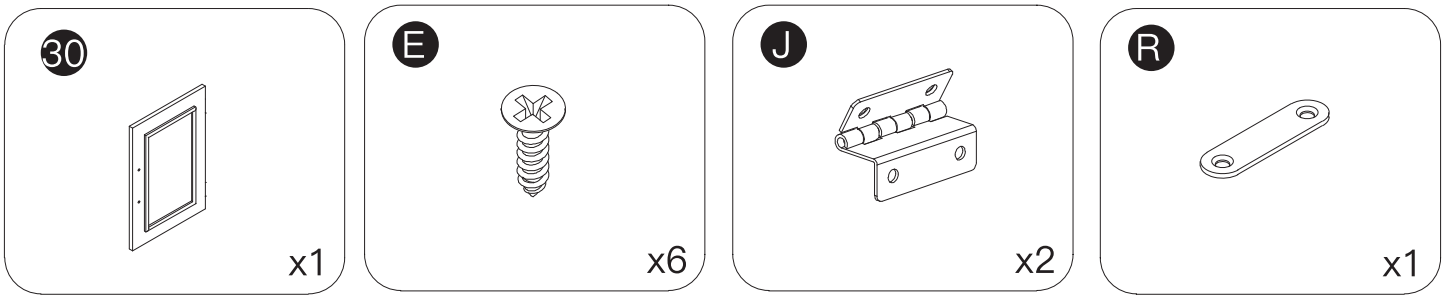

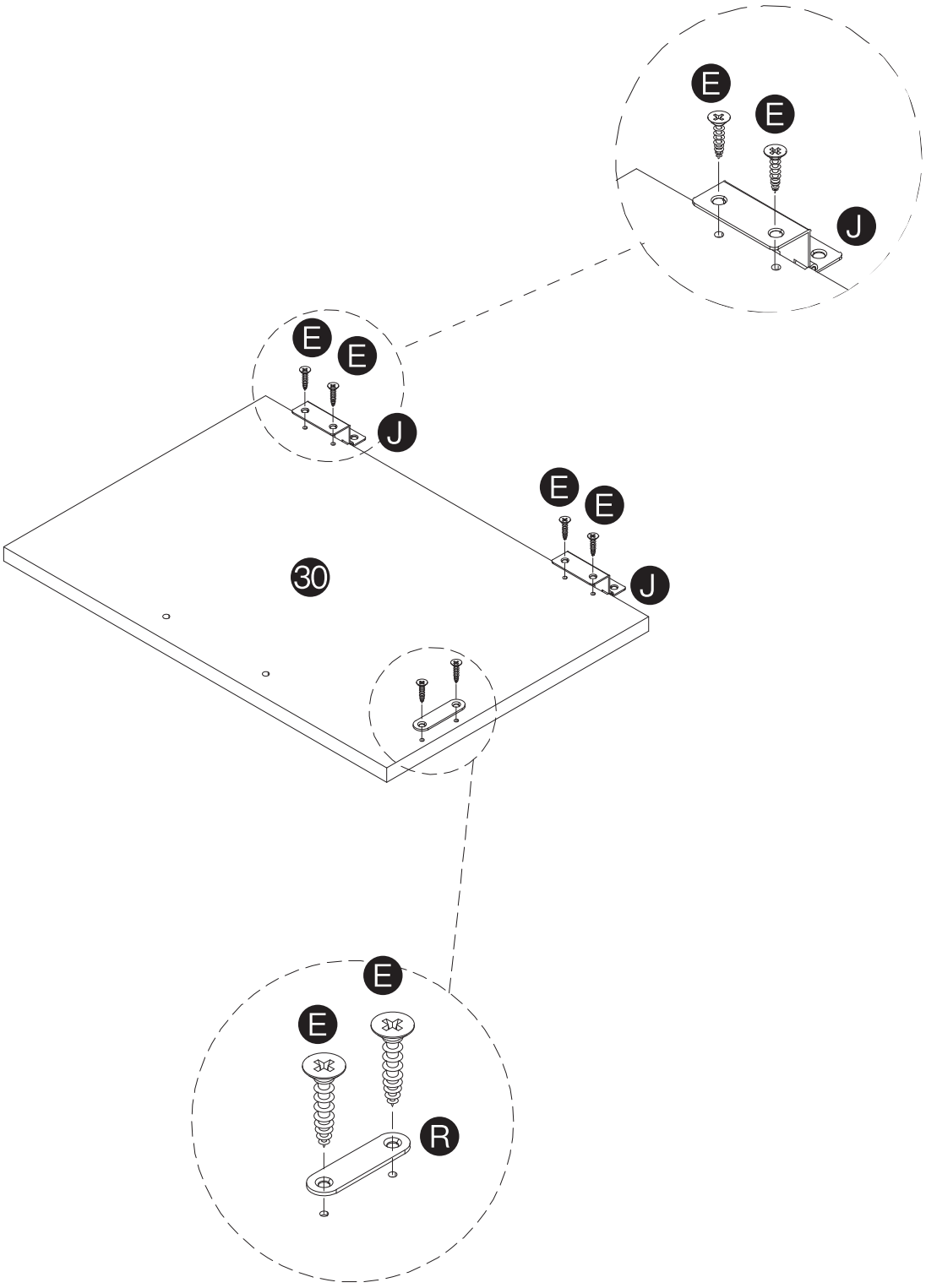

STEP 49

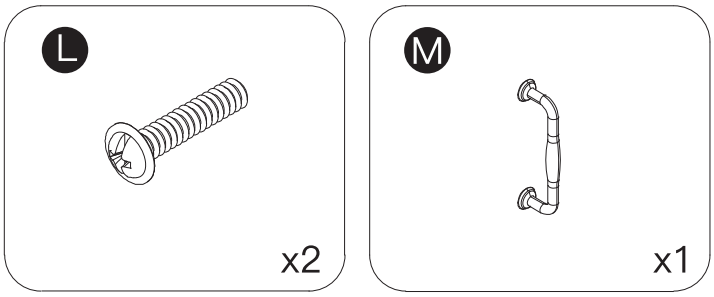

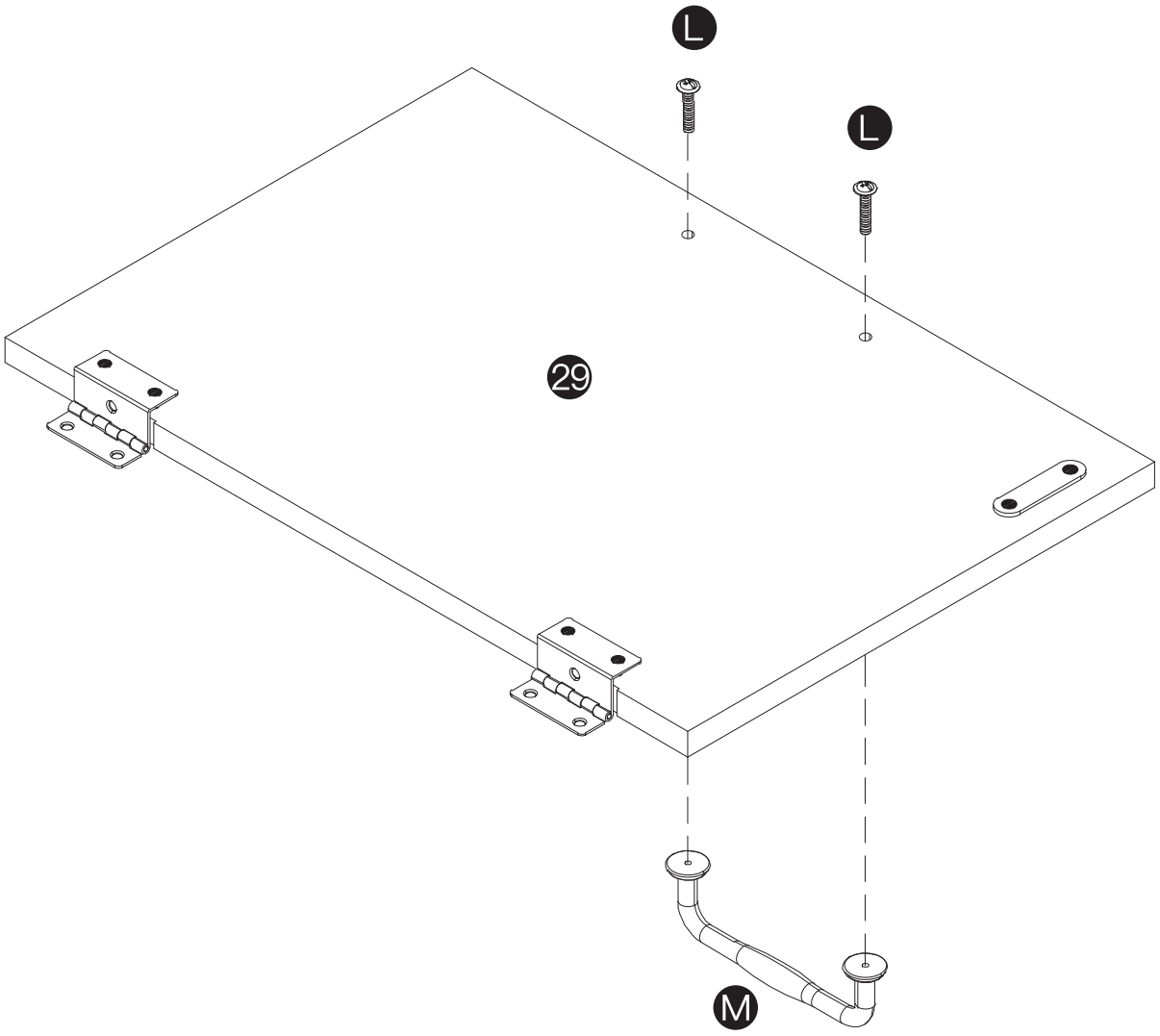

STEP 50

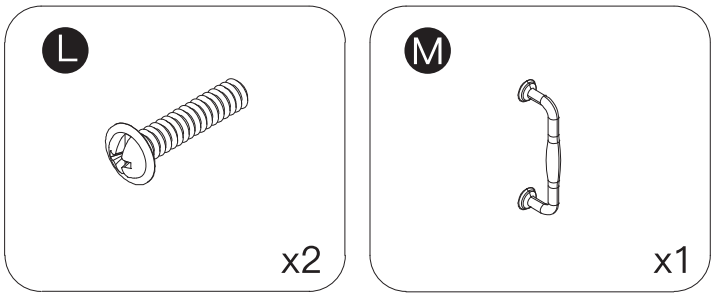

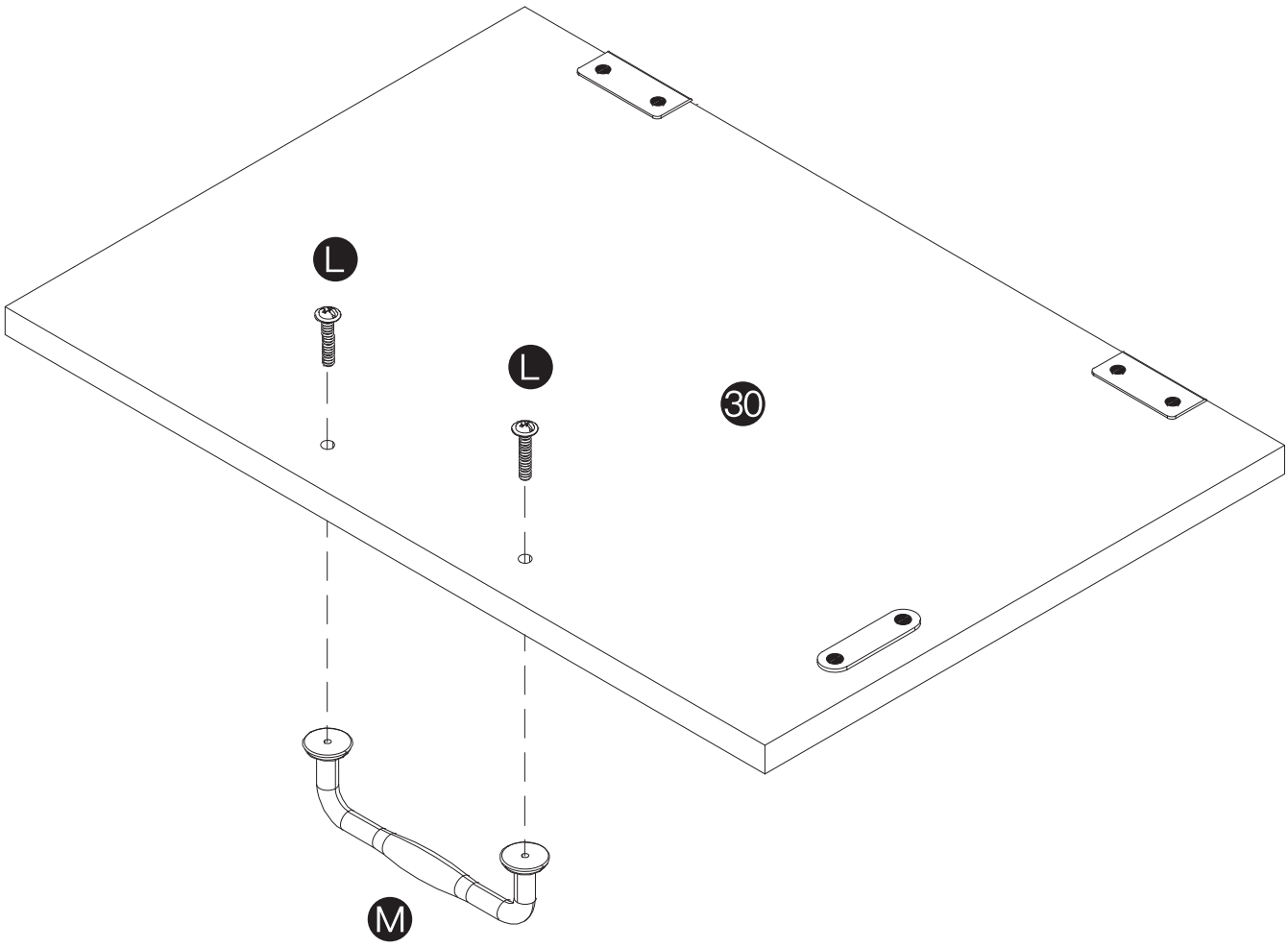

STEP 51

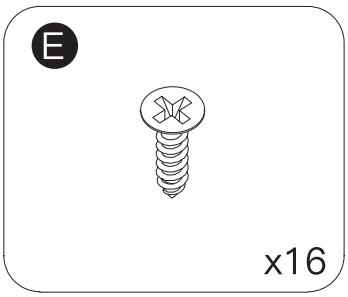

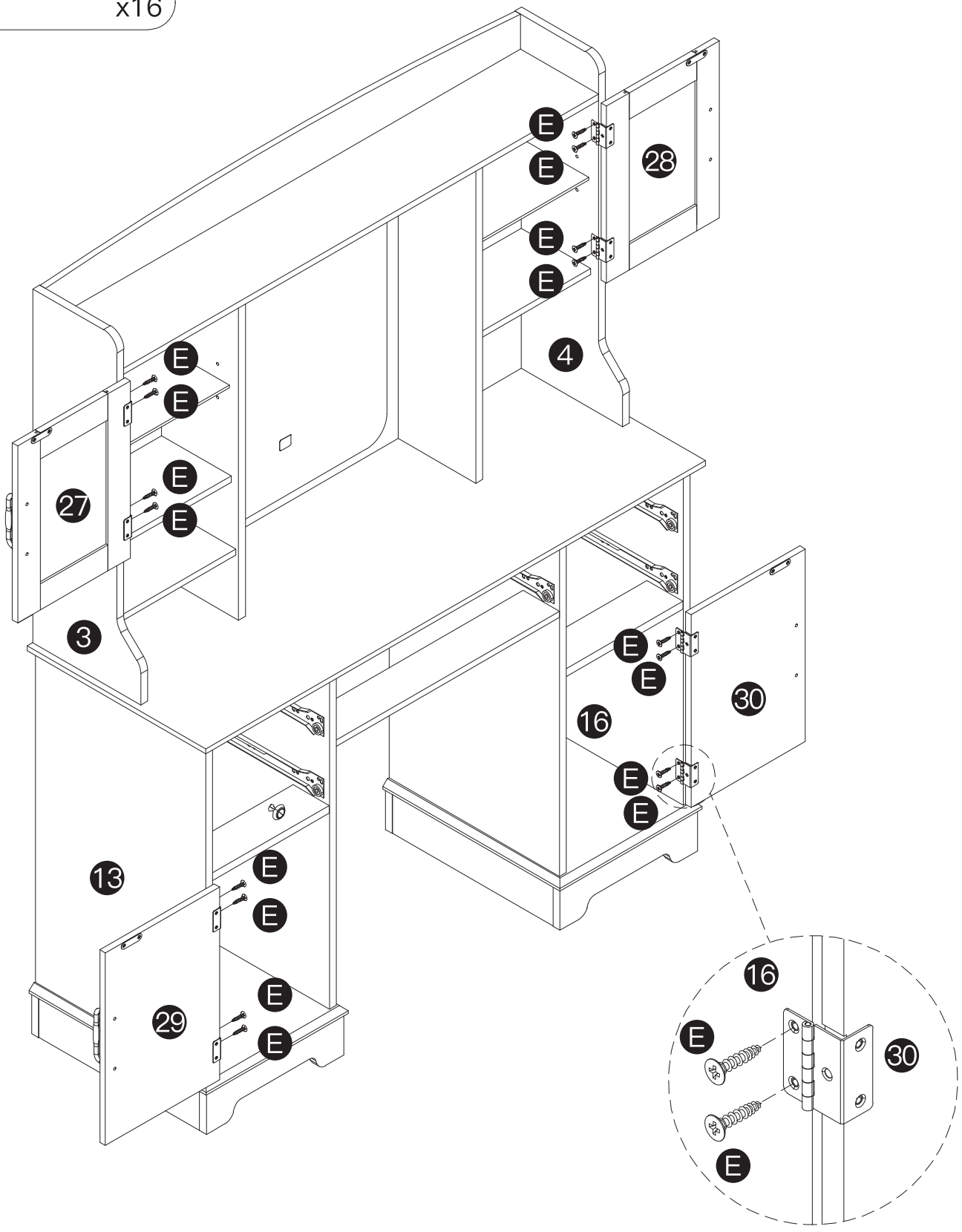

STEP 52

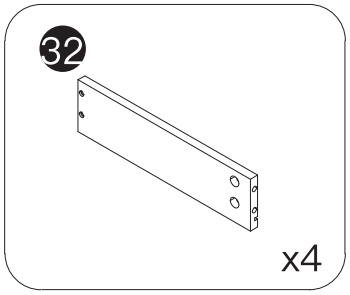

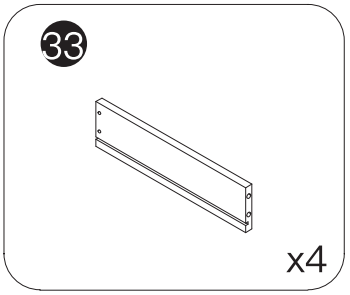

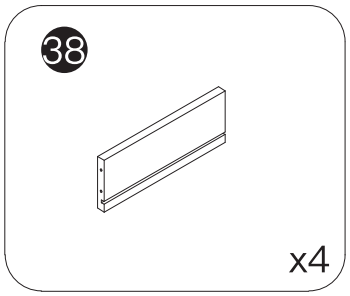

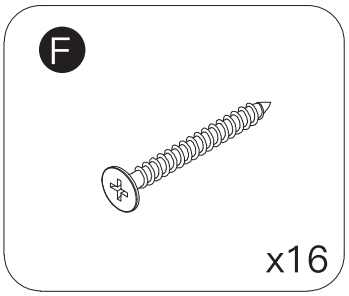

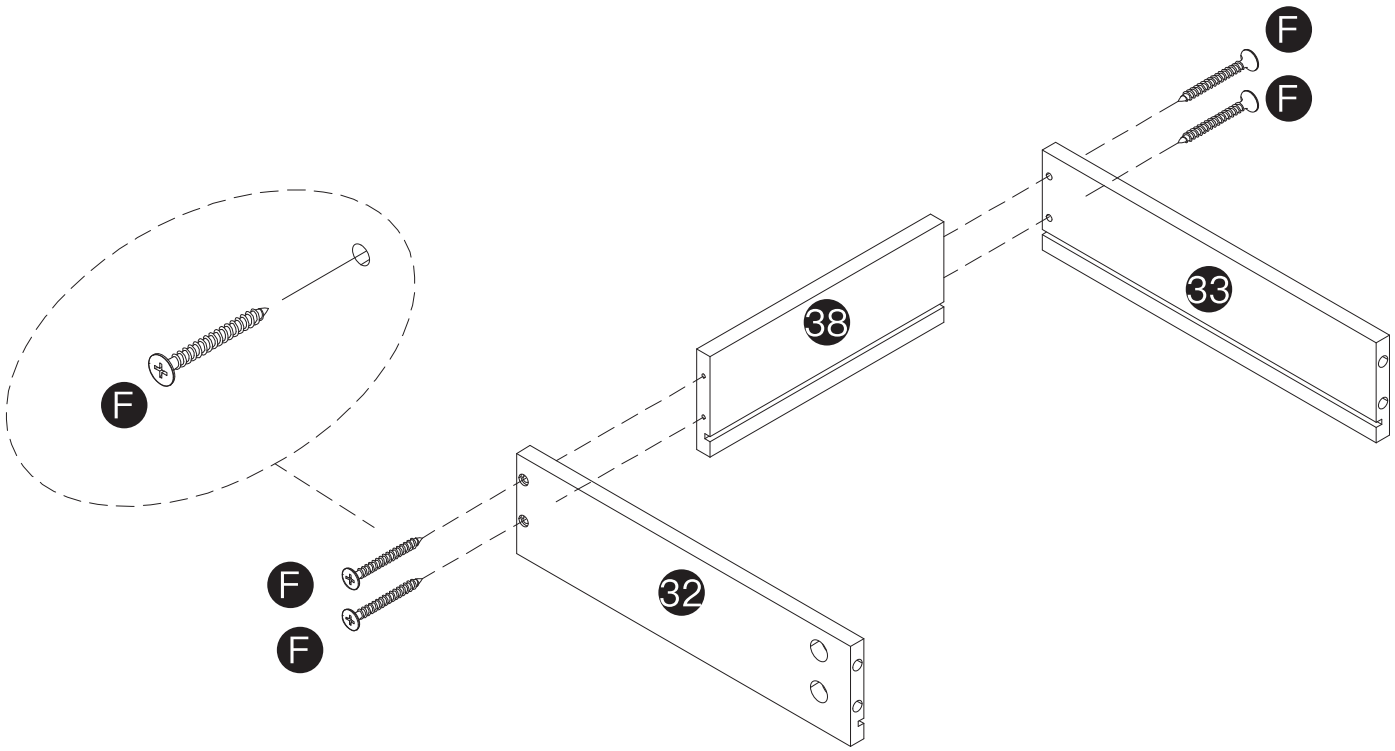

x4

STEP 53

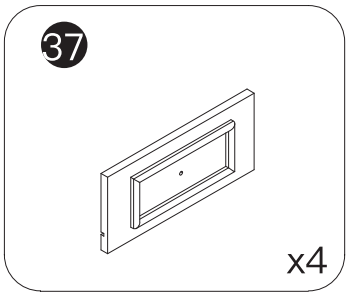

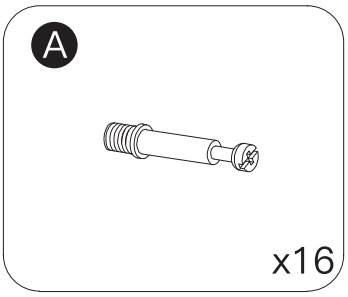

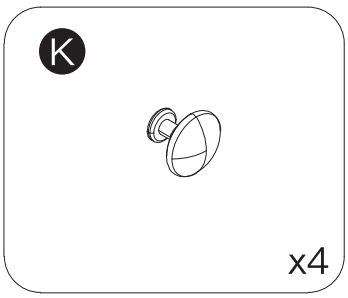

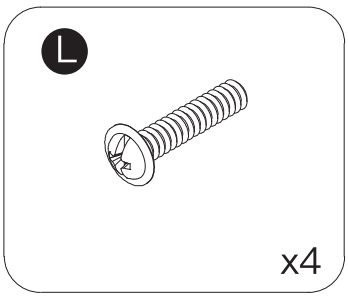

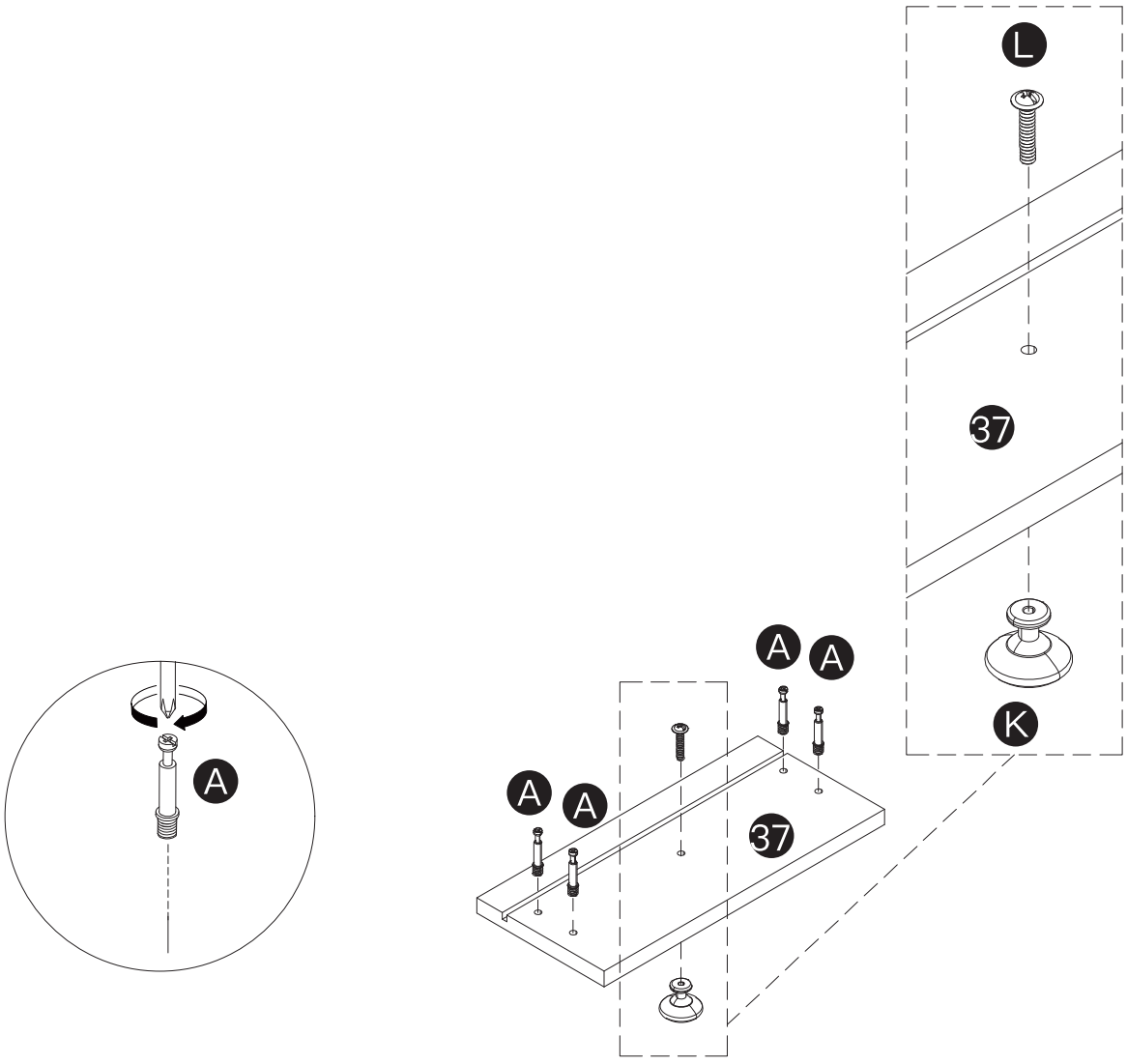

x4

STEP 54

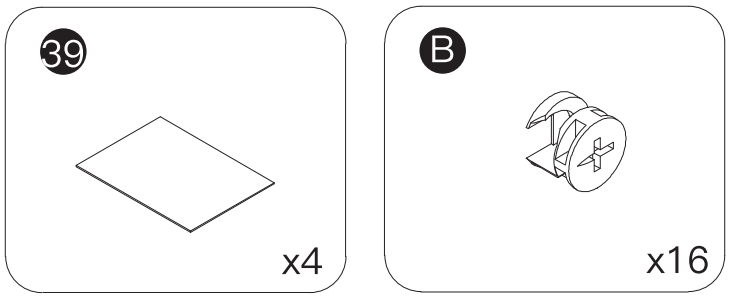

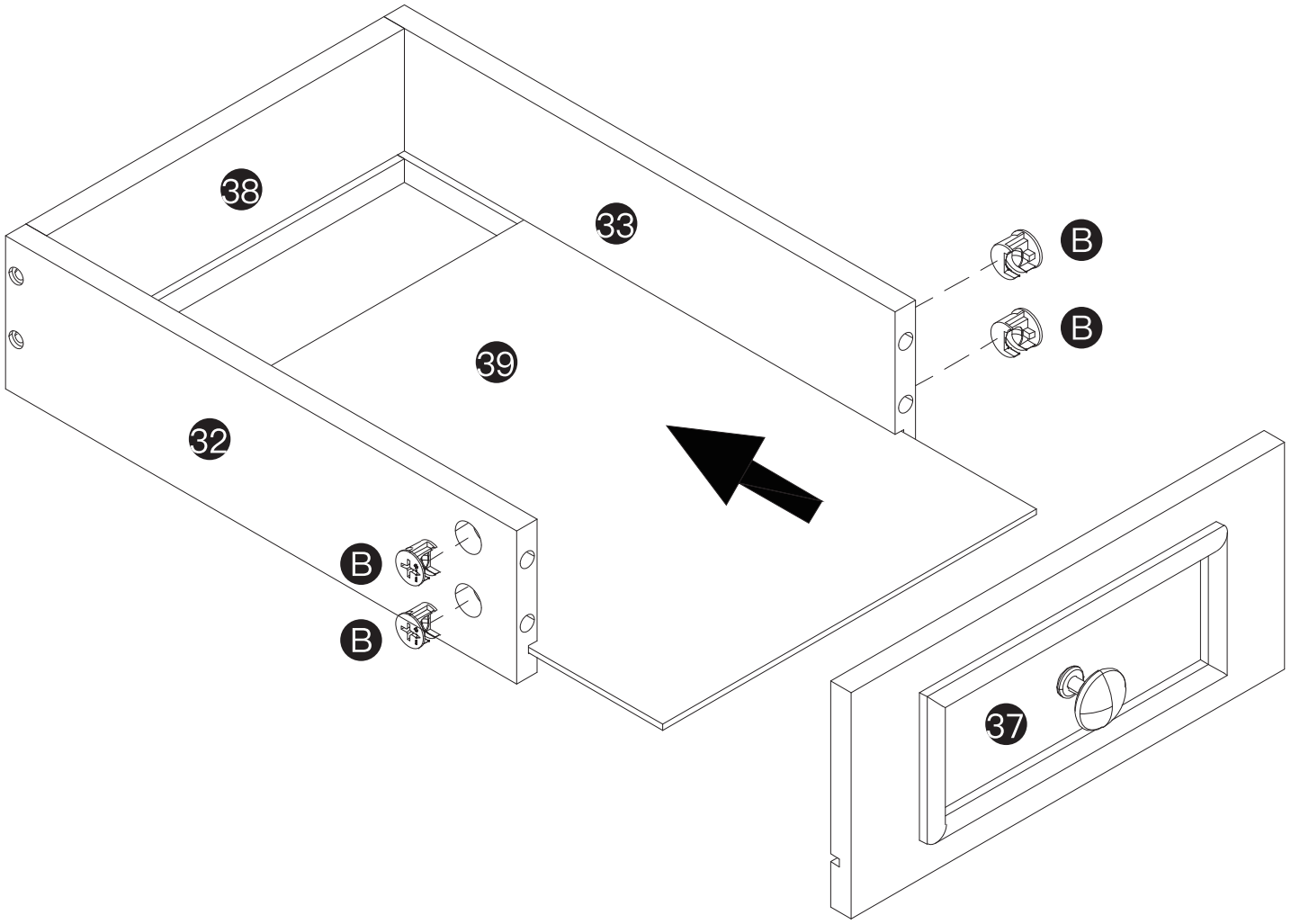

STEP 55

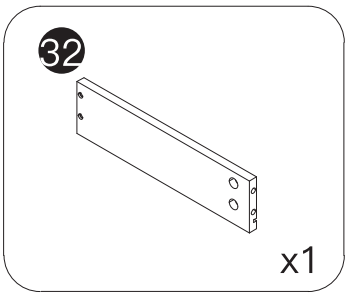

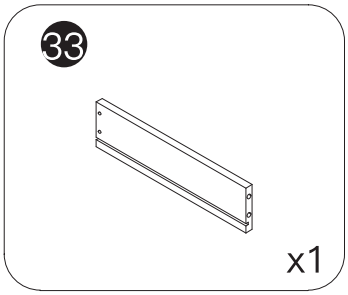

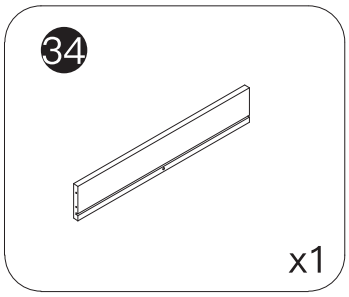

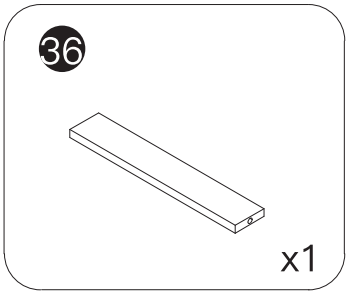

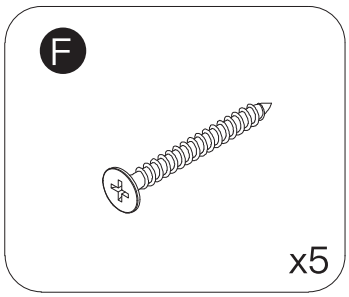

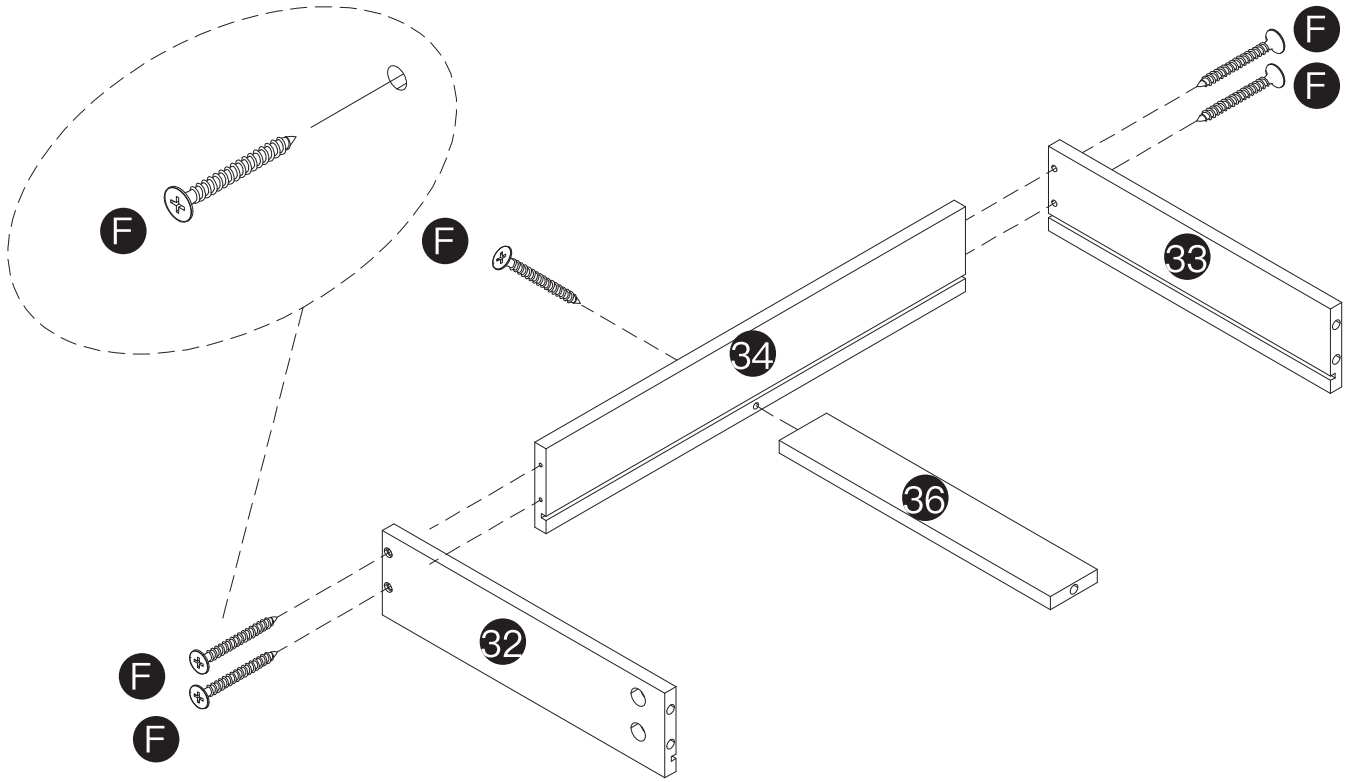

STEP 56

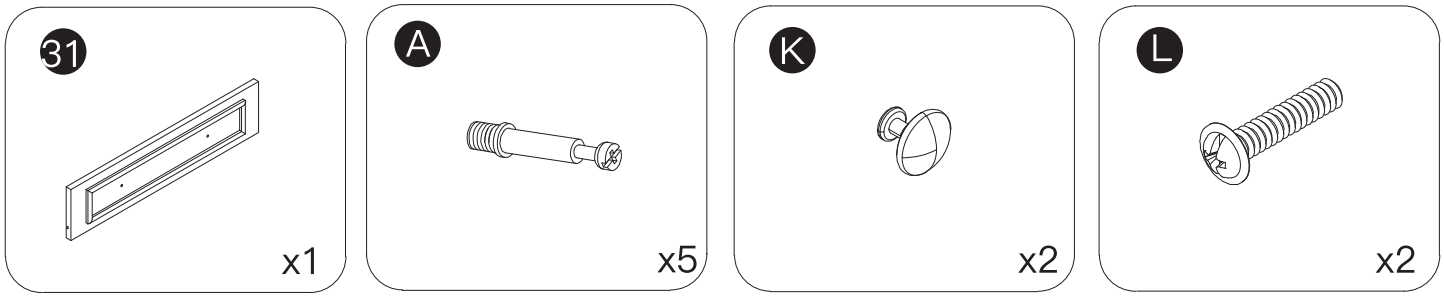

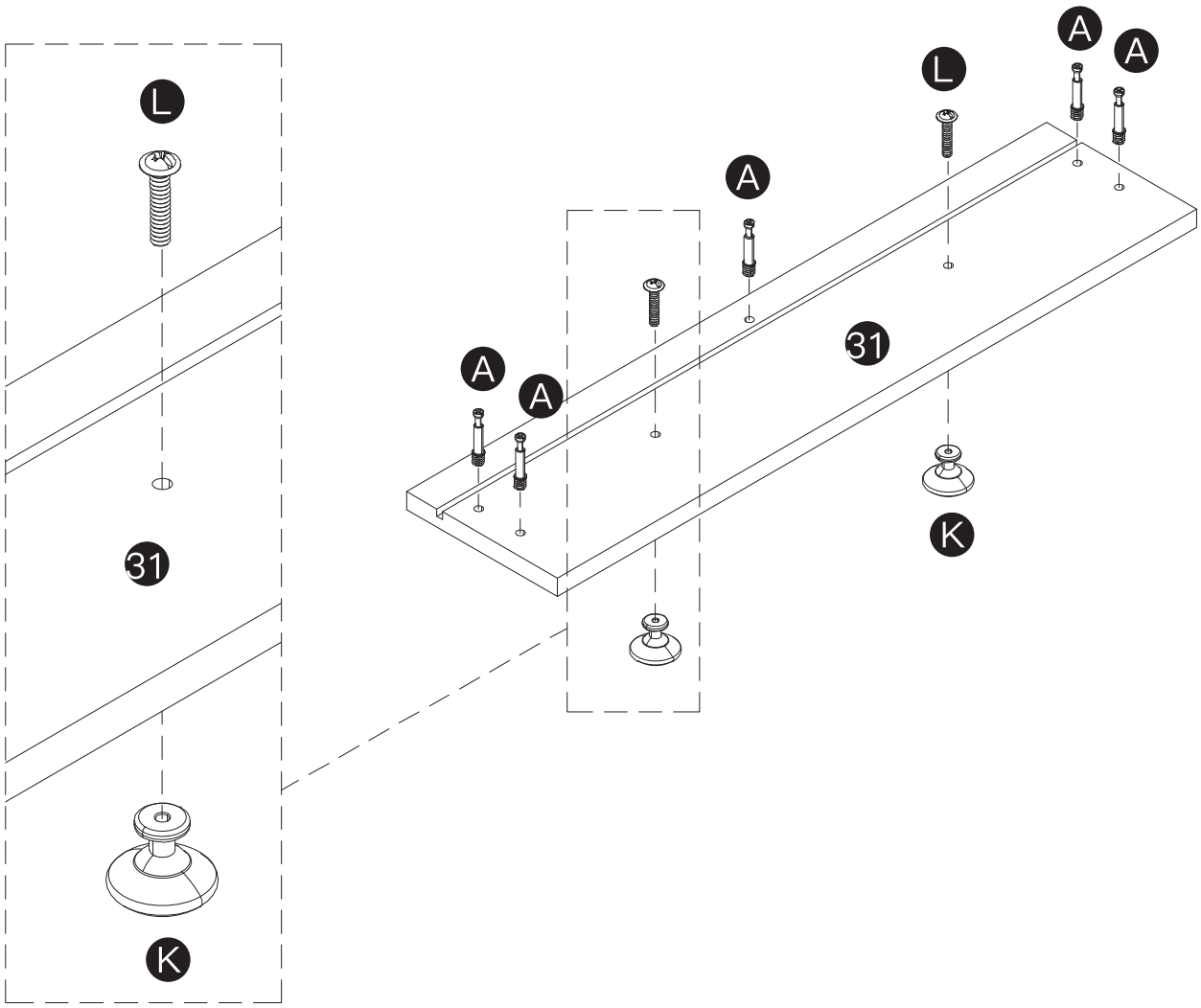

STEP 57

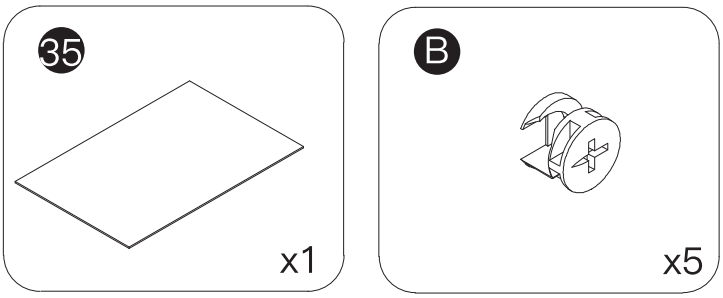

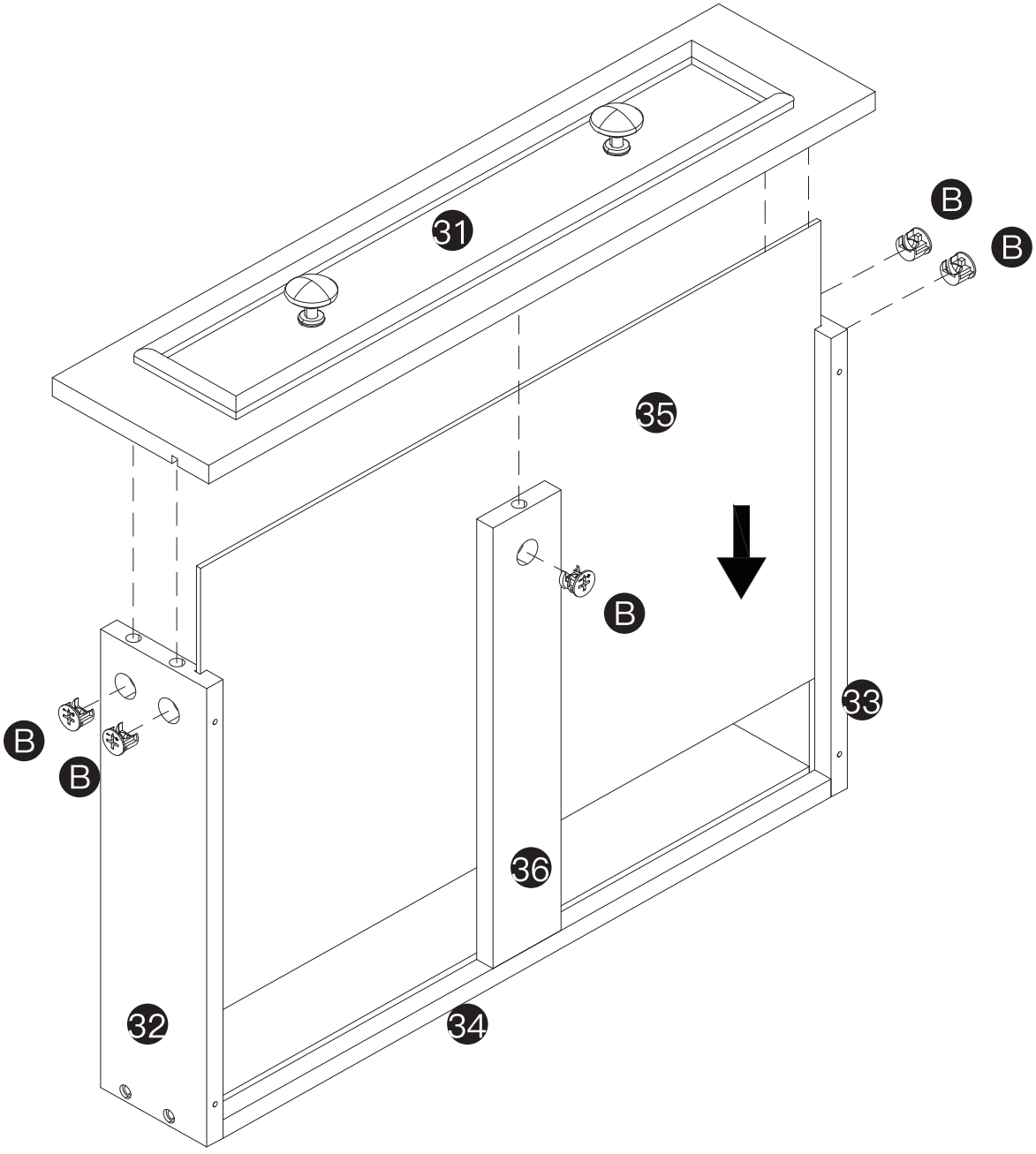

STEP 58

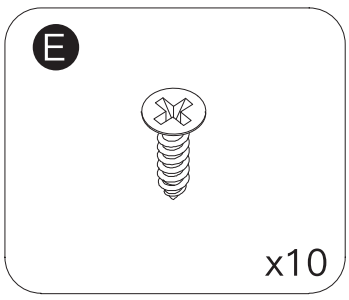

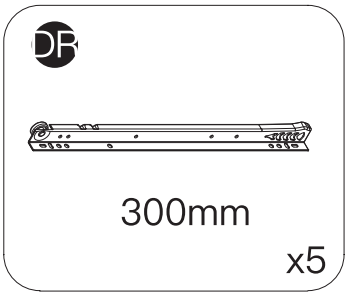

NOTICE:
Please pay attention to the direction of the rails.

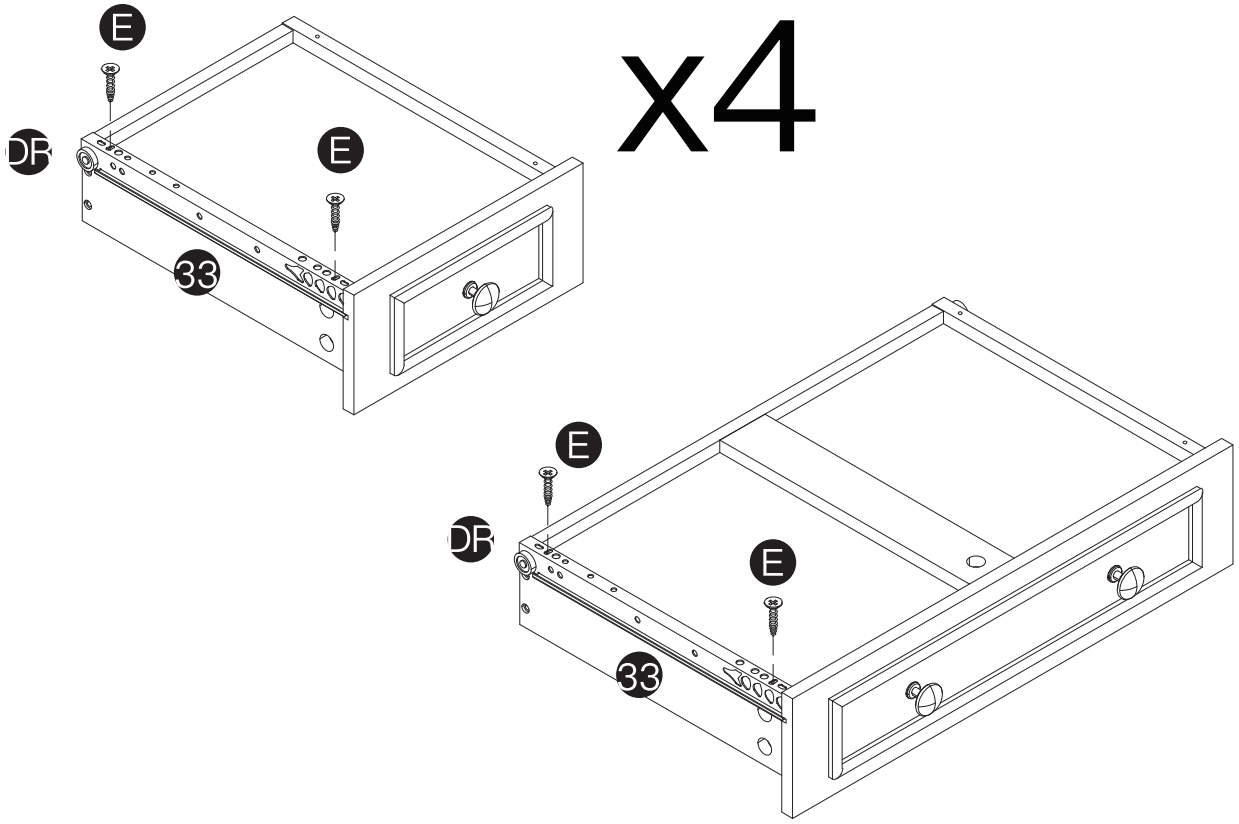

REMARK:

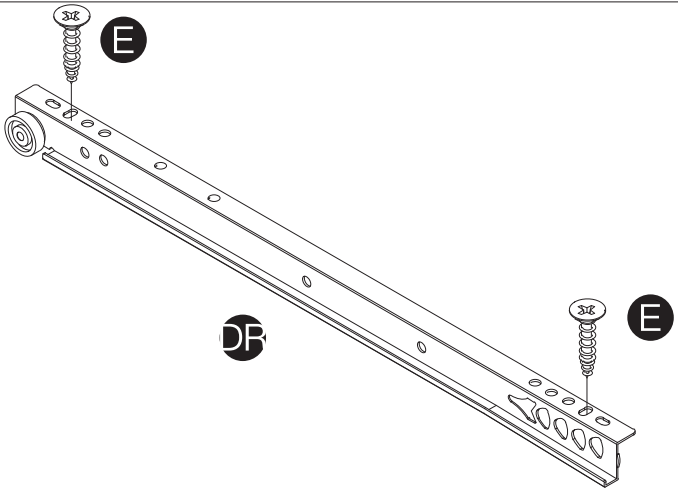

STEP 59

E

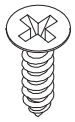

x10

DL



300mm

x5

NOTICE:
Please pay attention to the direction of the rails.

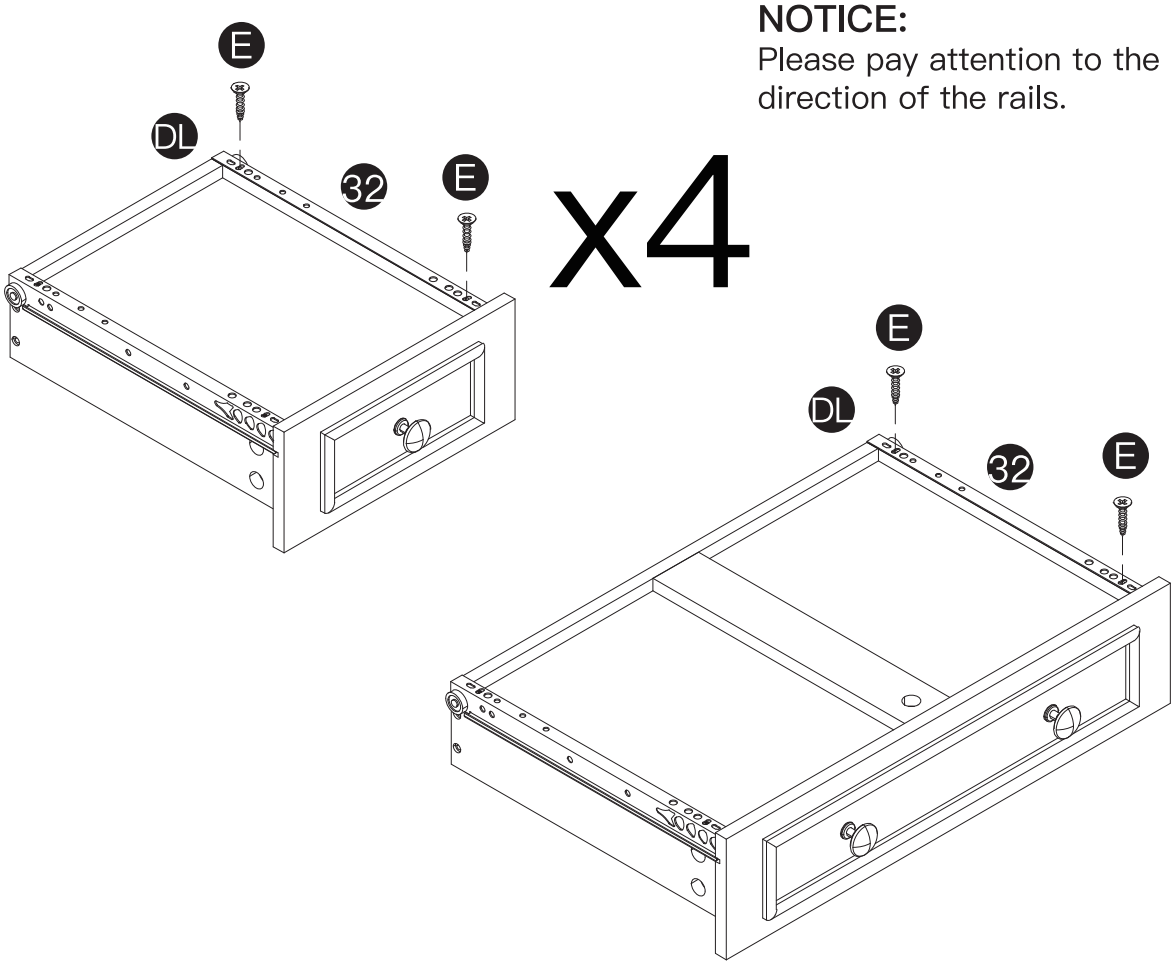

REMARK:

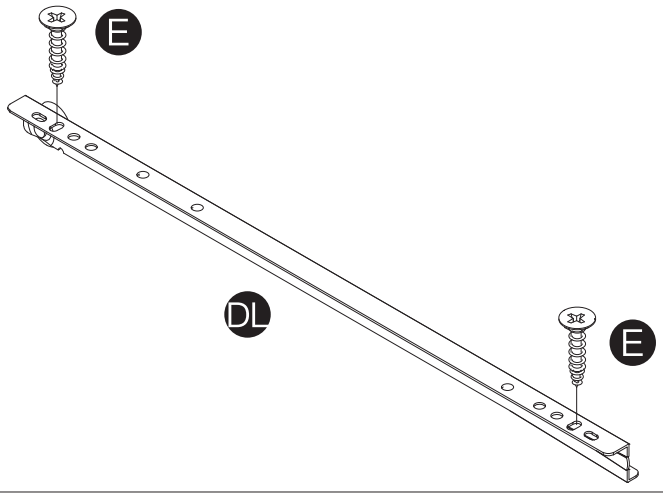

STEP 60

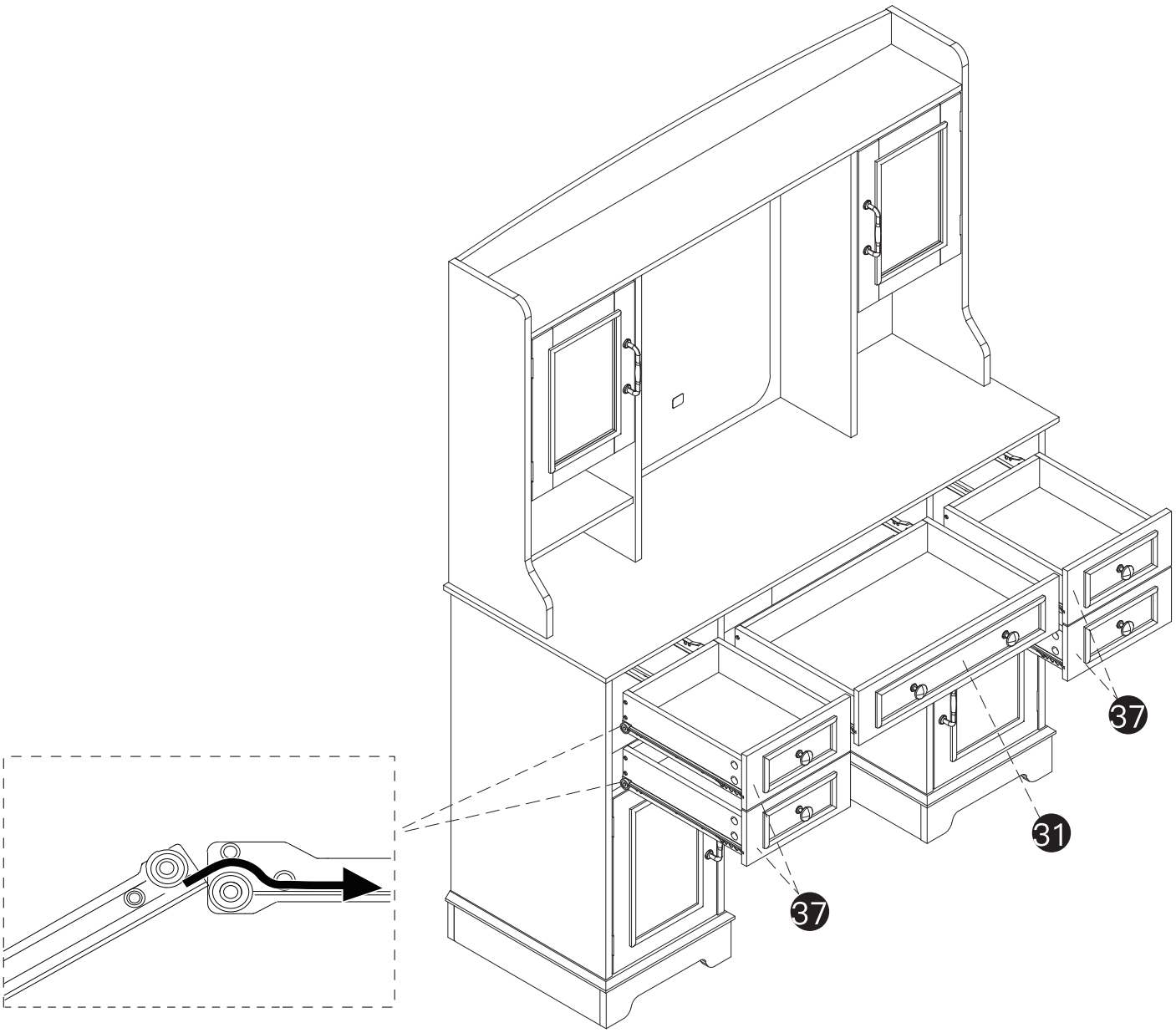

STEP 61

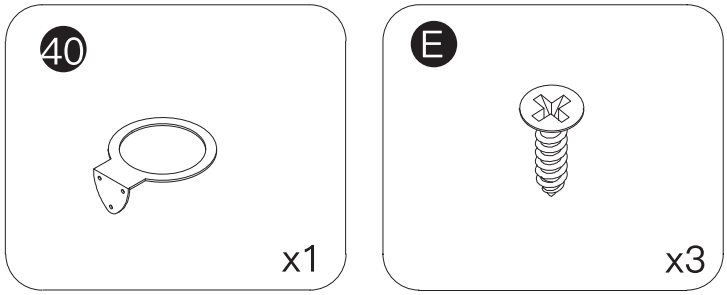

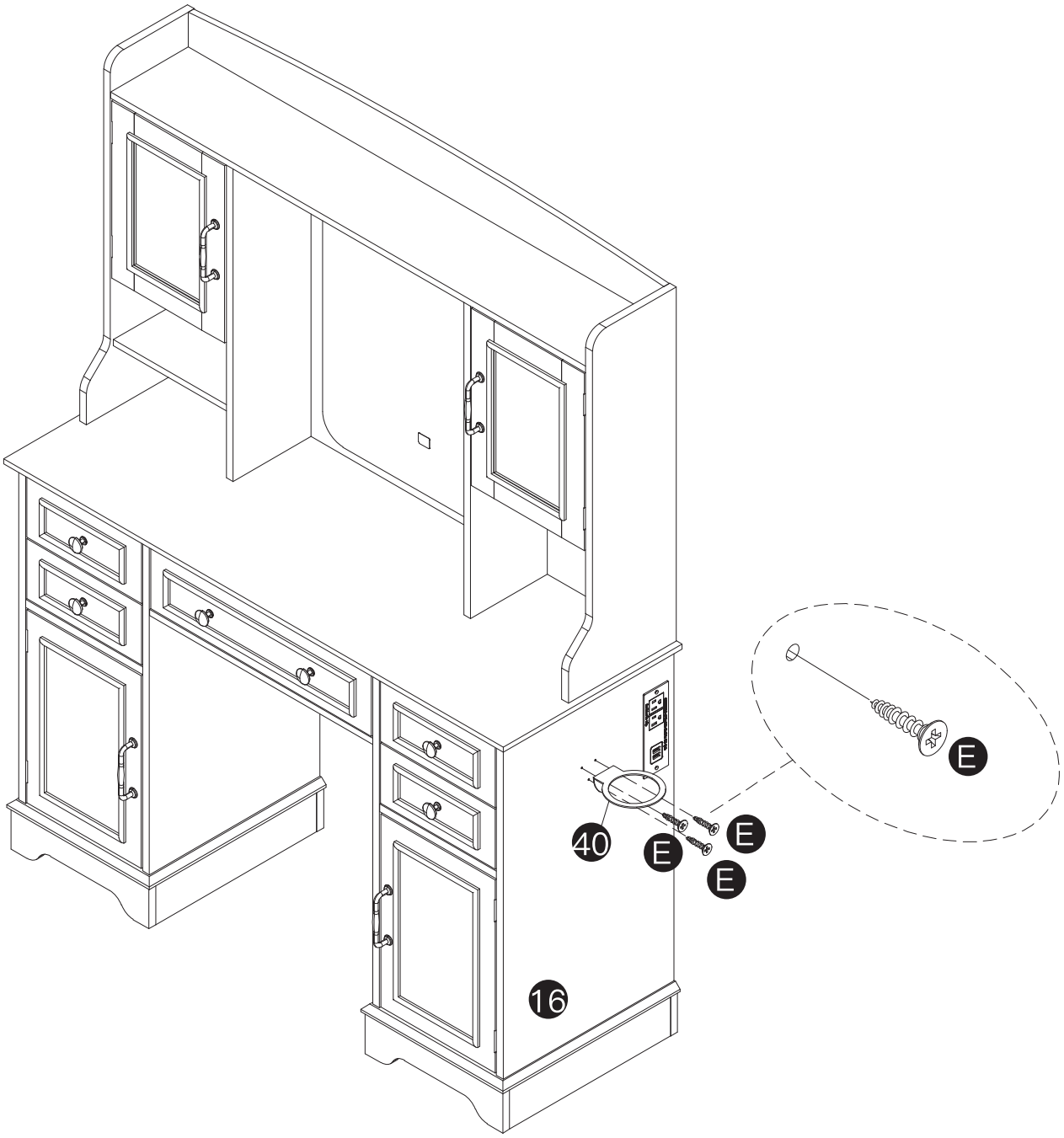

Maintenance Instructions

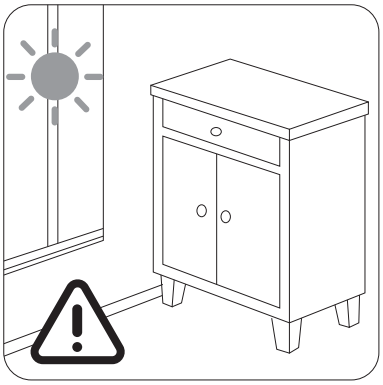

AVOID DIRECT SUNLIGHT



NO DIRECT CONTACT WITH FLAMMABLE OR OXIDIZ–ABLE ITEMS



NO CLIMBING

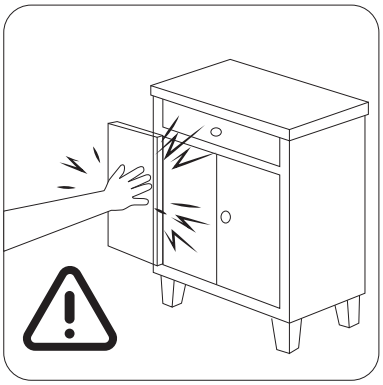

DO NOT USE EXCESSIVE FORCE



REMOVE ALL CONTENTS BEFORE MOVING FURNI–TURE

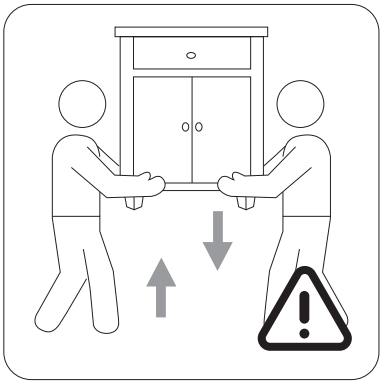

DO NOT DRAG OR PUSH HARD WHEN MOVING

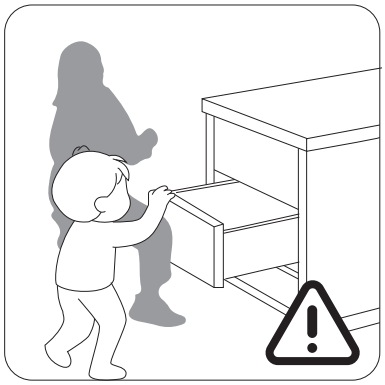

ADULT SUPERVISION REQUIRED FOR CHILDREN

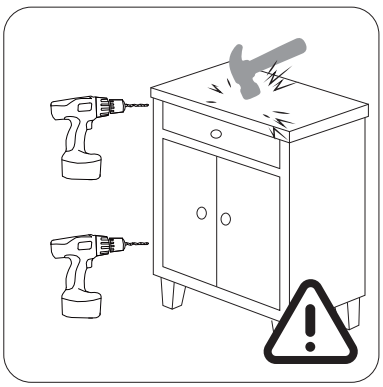

PREVENT SCRATCHES & NO SECONDARY DRILLING

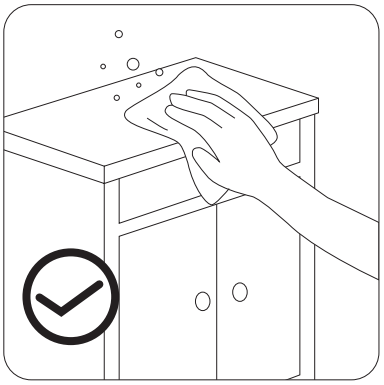

DUST REGULARLY

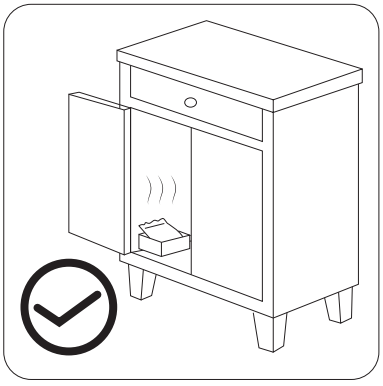

USE DEHUMIDIFYING PRODUCTS INSIDE CABINET IF NEEDED

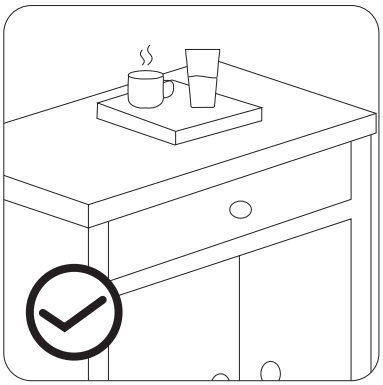

ALWAYS USE HEAT RE–SISTANT PADS UNDER HOT ITEMS

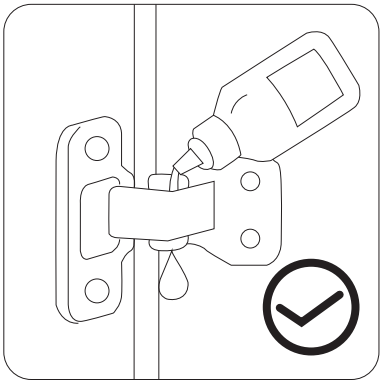

LUBRICATE MOVING PARTS SUCH AS HINGES AND SLIDES REGULARLY

AFTERSALE SERVICE

Dear customer,

Thank you so much for purchasing the product from us, we really appreciate your support.

We are aimed to provide the best shopping experience to our customers. We also want to build a mutually beneficial relationship with our customers, and step further to make our brand both reliable, responsible and recommendable.

We hope that our products could meet your needs and expectations, please consider us again if you need more products for your home and kitchen.

The package would be out of our control during shipping, please contact us through your purchasing channel directly if there is anything wrong with the box or contents. We are always here offering you our service.

We will reply your messages within 24 hours, please kindly wait for the response from our professional service team.

Your comfort and contentment are of utmost importance.

Best Regards,
Customer Care Specialist