INSTRUCTION SHEET

Joining Hardware Kit for Avante™ Series

You've made a great choice in adding an Avante™ Series multi-stream setup to your site. Following the instructions below will help receptacles perform at their best and look great as long as you own them.

JOINING HARDWARE KIT

SUPPLIED PARTS:

- **a.** 6 – 1/4" Washers
- **b.** 3 – 1/4" Clevis Pin
- **c.** 3 - Hairpin Cotter Pins

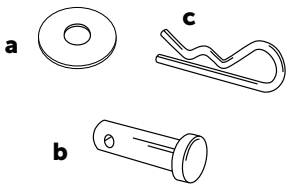

TOOLS REQUIRED:

- Power drill
- 1/4" or 9/32" drill bit

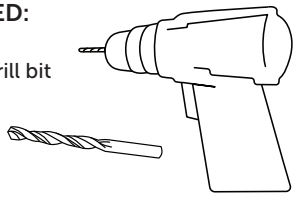

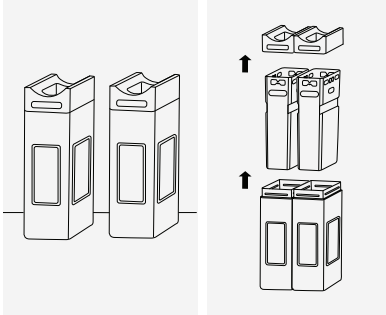

1. Prepare receptacles
Determine the order you would like your receptacles to be joined. Remove lids and liners from each receptacle.

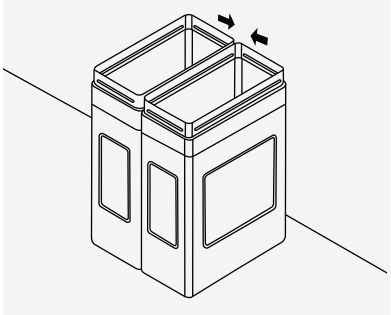

2. Push the two receptacles together
Align the front and back faces of each receptacle.

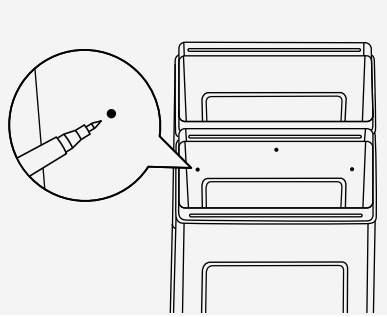

3. Mark joining holes
Using a sharpie that will show up on black plastic, mark 3 locations in a triangular pattern on the inside of the receptacle. The top mark will be centered 2" below the inner lip of the receptacle. The right and left mark should be 6" lower than the top mark, and if attaching the long faces, 20" apart. If attaching the short faces, they should be 8.5" apart.

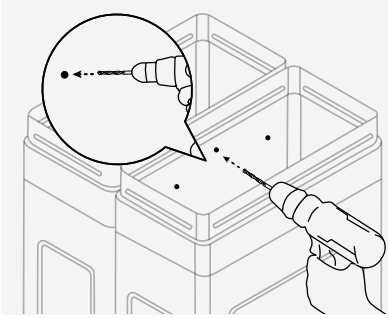

4. Drill joining holes
Use a 1/4" or 9/32" drill bit to drill through both receptacles at the top marked location. Wait to drill the other two marks until completing step 6 and 7.

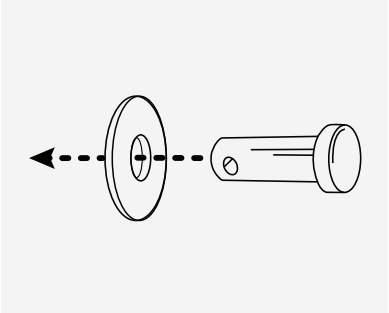

5. Prepare hardware
Slide one washer onto one of the three supplied clevis pins.

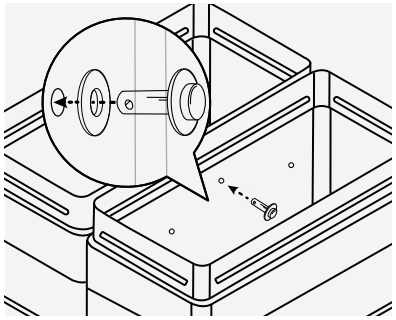

6. Join receptacles together
From the inside of the right receptacle, push the clevis pin and washer from step 5 through both receptacles. Slide an additional washer over the exposed end of the clevis pin in the left receptacle.

DESIGNED AND PRODUCED BY COMMERCIAL ZONE® PRODUCTS
MILWAUKEE, WI | A Marmon/Berkshire Hathaway Company | www.commercialzone.com

COMMERCIAL ZONE® PRODUCTS
MARMON RETAIL SOLUTIONS – BERKSHIRE HATHAWAY

INSTRUCTION SHEET

Joining Hardware Kit for Avante™ Series

You've made a great choice in adding an Avante™ Series multi-stream setup to your site. Following the instructions below will help receptacles perform at their best and look great as long as you own them.

JOINING HARDWARE KIT

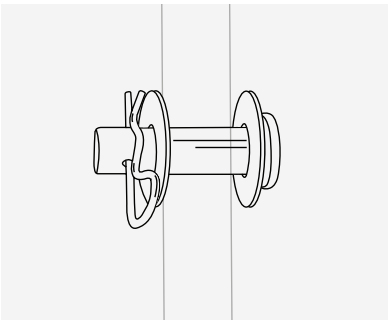

7. Install remaining hardware
Next, install the provided hairpin cotter pin into the end of the clevis pin. Repeat steps 4-7 for each of the remaining two marked locations on the receptacle.

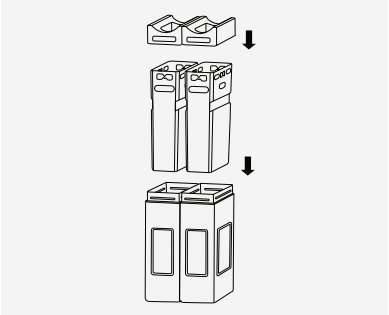

8. Replace lids & liners
Once all hardware has been secured, place liners with trash bags inserted into the receptacles and place lid.

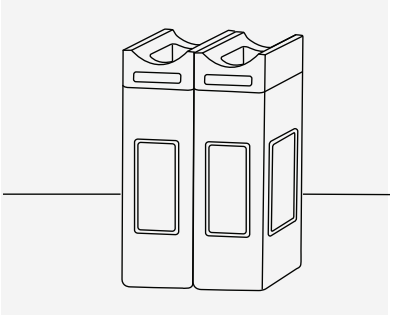

9. Ready to use
Place receptacles in desired location.