Outdoor living

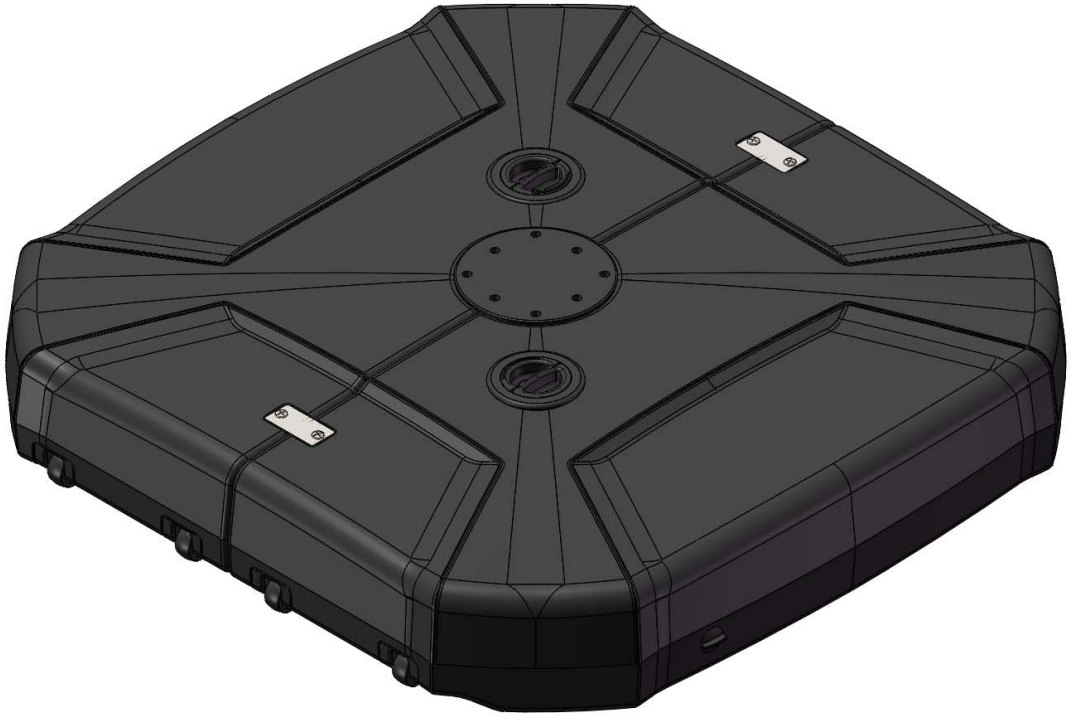

OFFSET UMBRELLA BASE

Assembly Manual

ECLIPSE/OVERCAST SERIES

A 1X 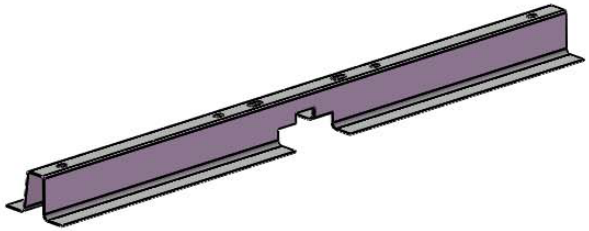	B 1X 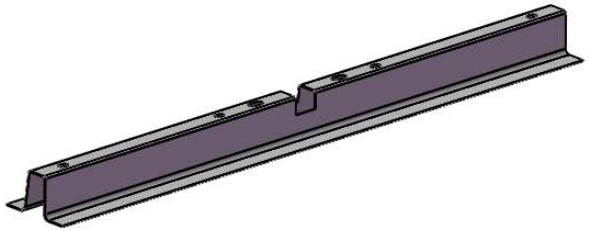
C 1X 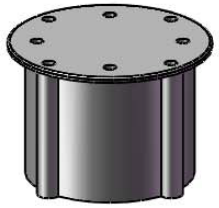	D_1 1X 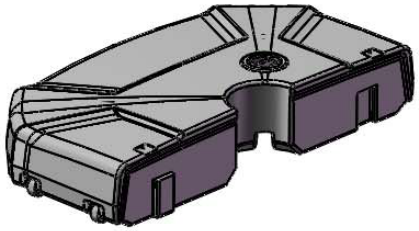
D_2 1X 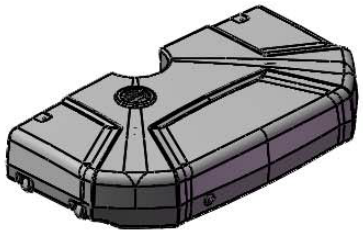	E 2X 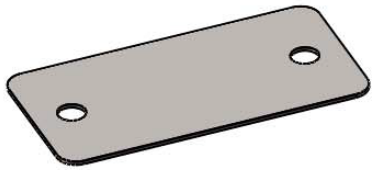
F 4X 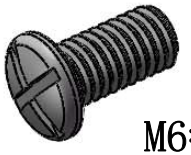 M6*12	G 8X 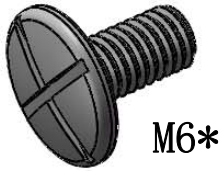 M6*12
H 4X 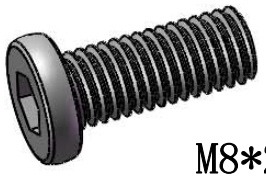 M8*20	J 4X 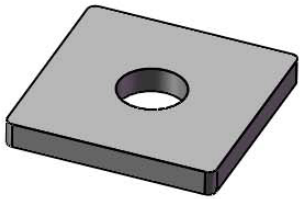
K 4X 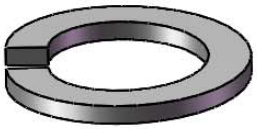	L_1 1X L_2 1X 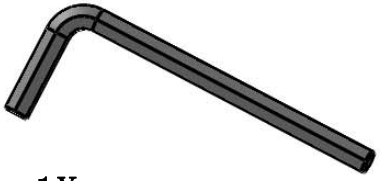

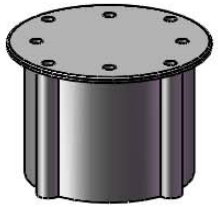

C 1X

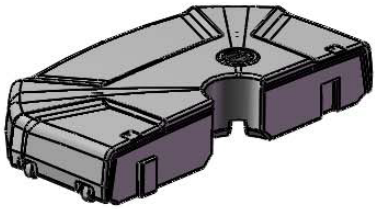

D1 1X

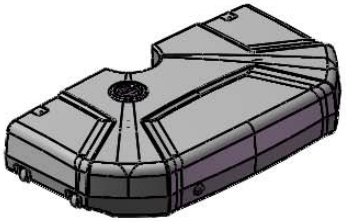

D2 1X

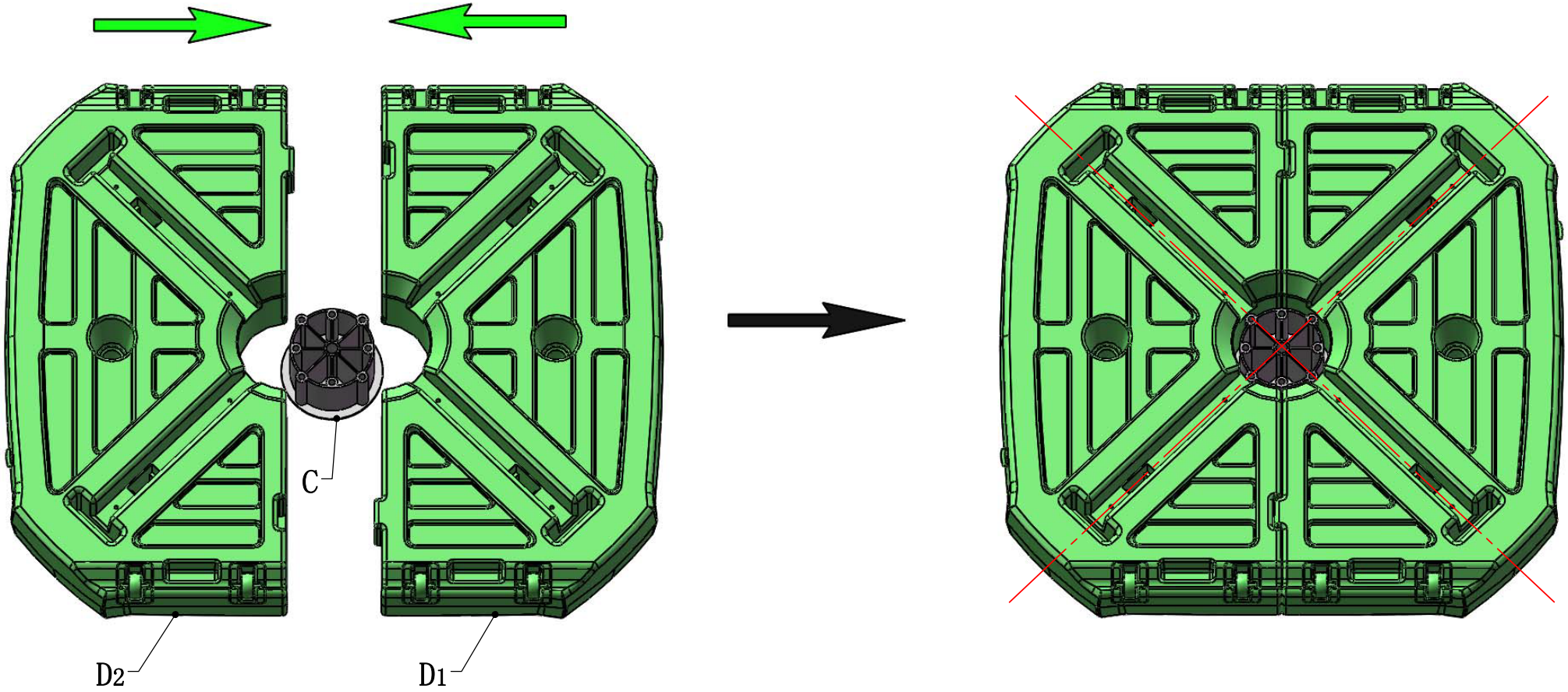

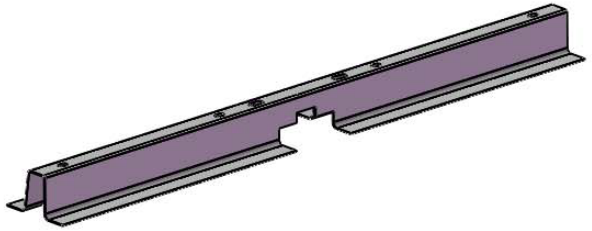

A 1X

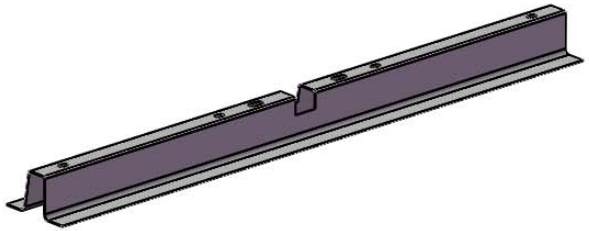

B 1X

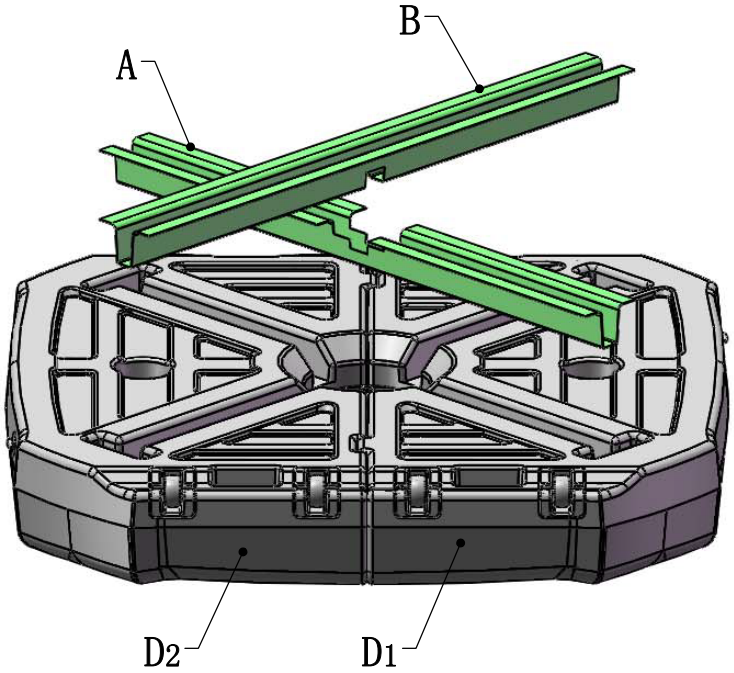

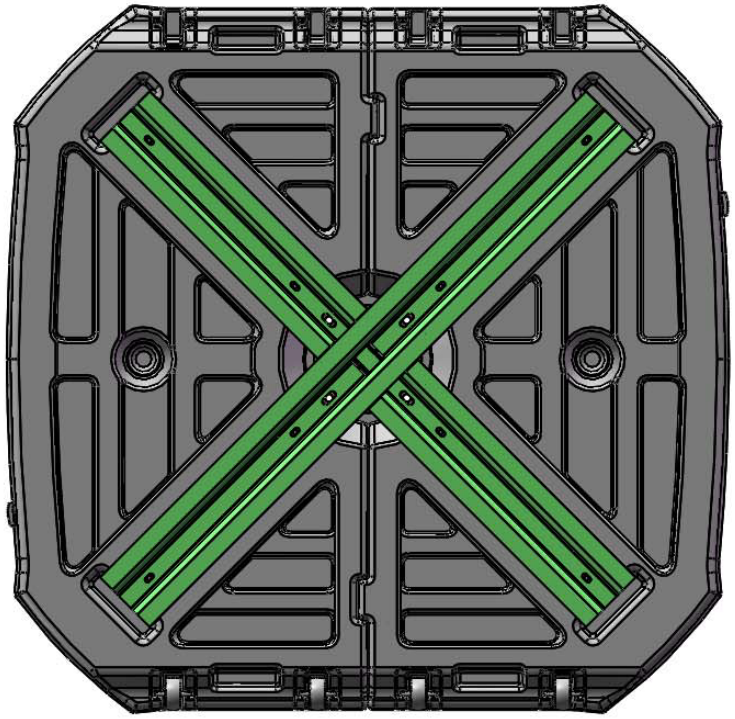

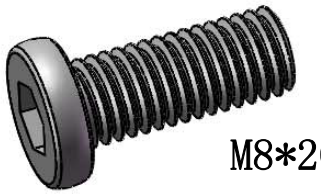

H 4X

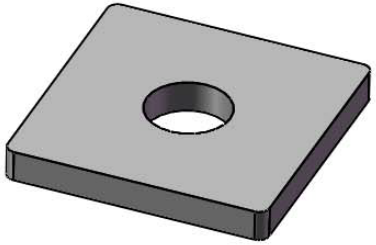

J 4X

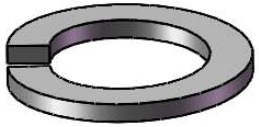

K 4X

L2 1X

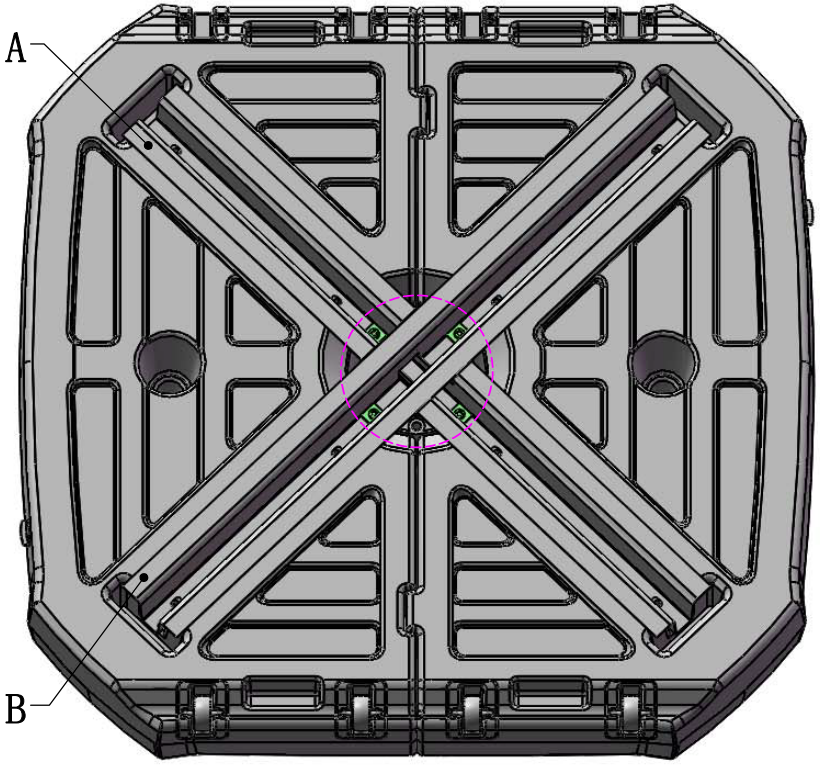

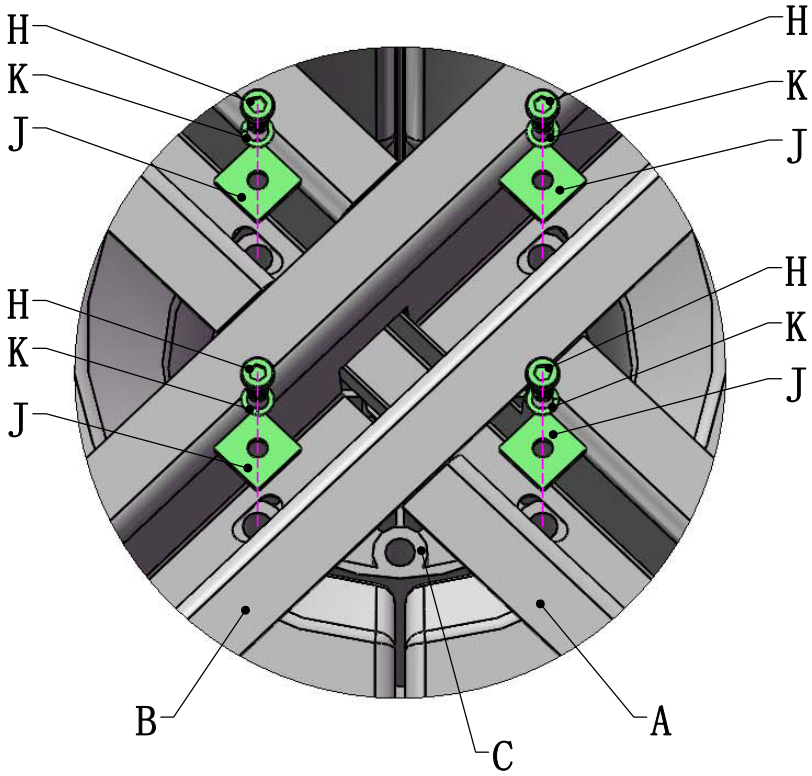

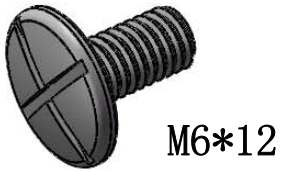

M6*12

G 8X

L1 1X

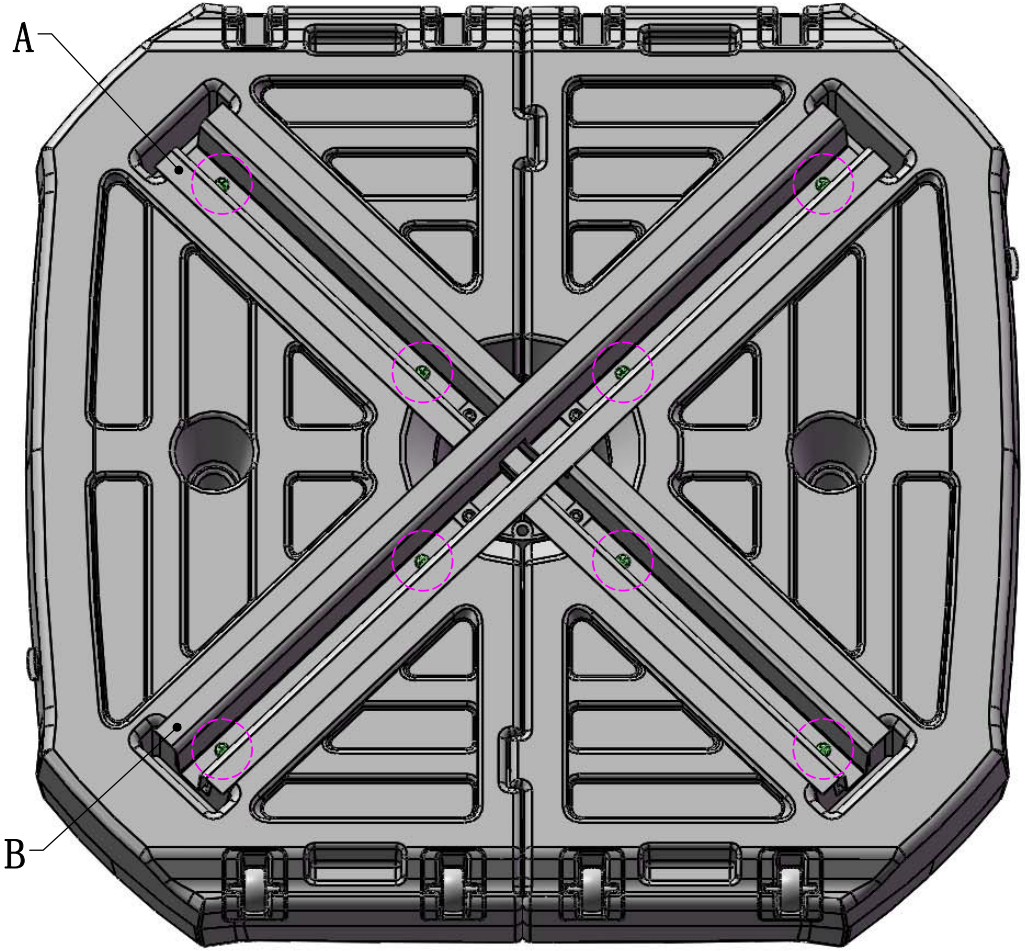

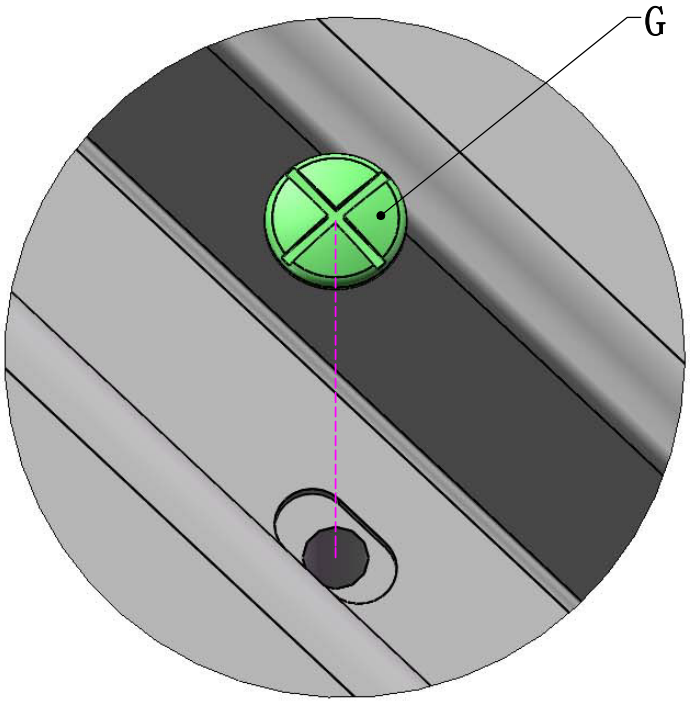

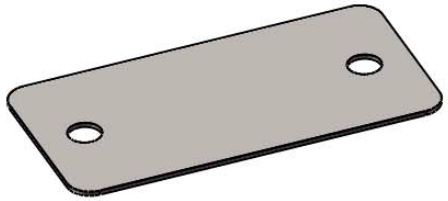

E 2X

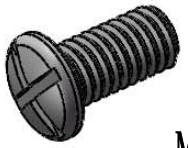

M6*12

F 4X

L1 1X

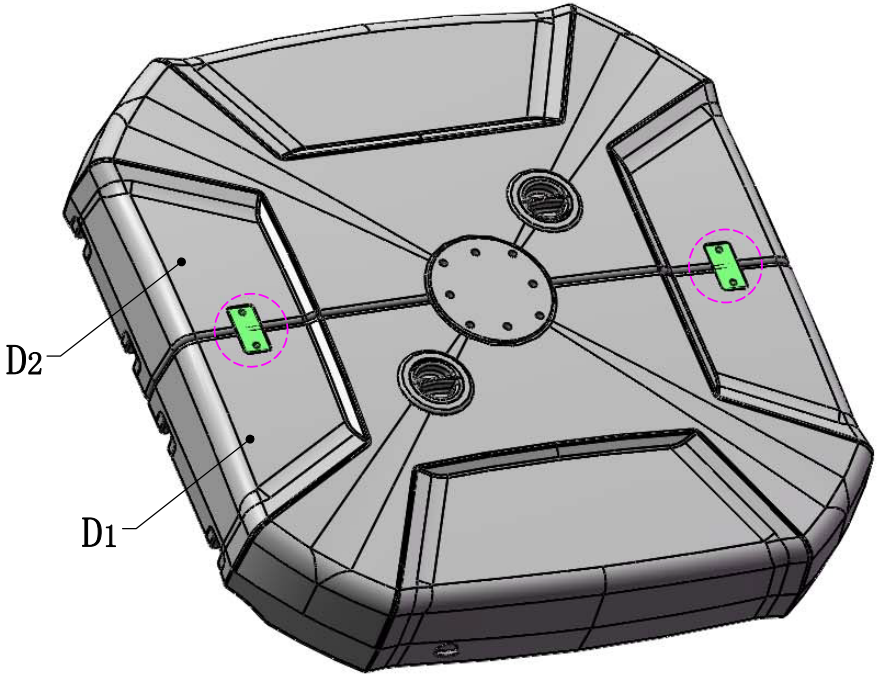

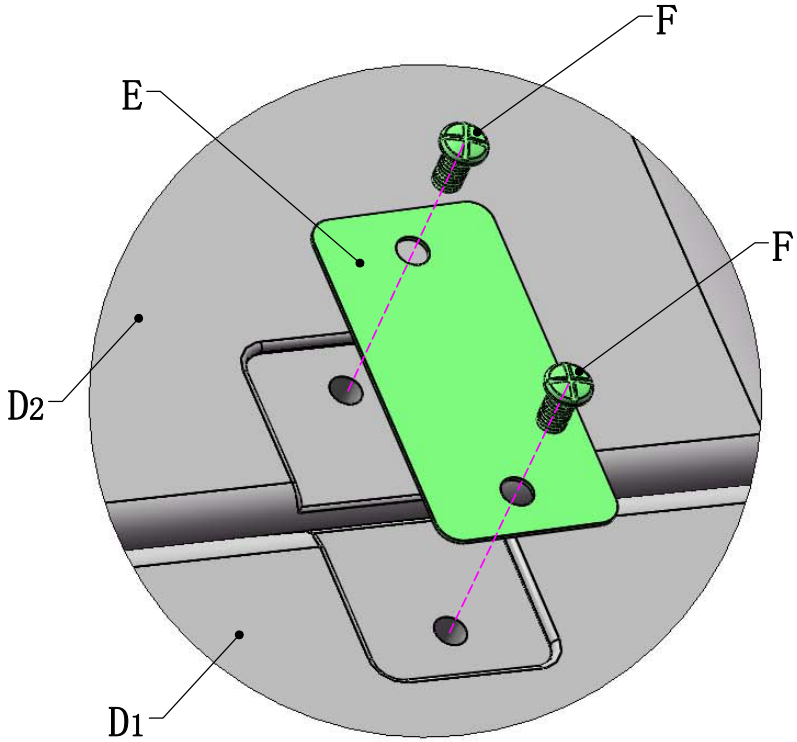

It is normal that there will be a small gap after the two bases are spliced.