ASSEMBLY INSTRUCTIONS
30 INCH BATH VANITY (COMBO)

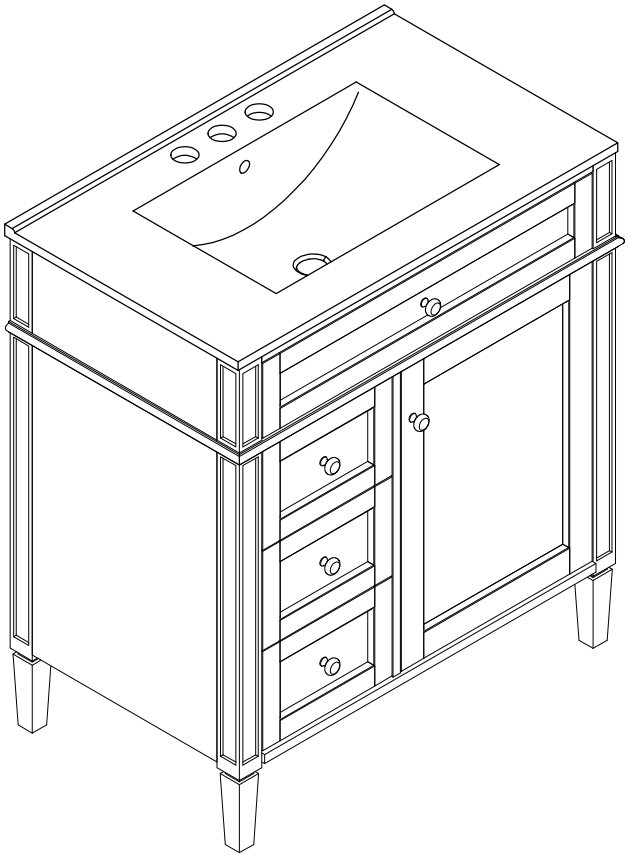

Thank you for purchasing this quality product. Be sure to check all packing material carefully for small parts which may have come loose inside the carton during shipment. Separate, identify and count all parts and hardware. Compare with the parts list to be sure all parts are present.
"DO NOT TIGHTEN SCREWS UNTIL COMPLETELY ASSEMBLED"

* Use of power tool to assemble this product will invalidate any claim and damage this product making unsafe !!!
* Please assemble on a clean soft surface to avoid damage.

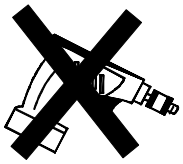

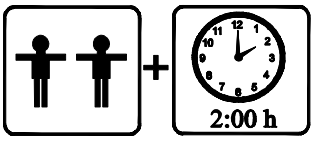

Tools Required

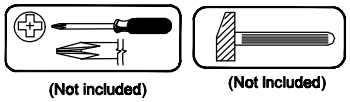

(Not included) (Not included)

IMPORTANT:

PLEASE READ INSTRUCTION BEFORE STARTING THE ASSEMBLY

Before Installation

Important – Please read these instructions fully before starting assembly

Thank you for purchasing this quality product. Be sure to check all packing materials carefully for small parts, which may have come loose inside the carton during shipment. Identify and count all items according to the PARTS LIST and/or HARDWARE LIST shown below. Check you have all the components and tools listed on the following pages.

- We recommend that you assemble this product with the assistance of another person; this will make the assembly easier, and will help eliminate damage to the product or injury to persons during assembly.
- Please do not over tighten screws or bolts until the assembly is completed.
- Keep children and animal away from the work area, small parts could choke if swallowed.
- Please put all parts on a non-abrasive floor before assembly,and follow the assembly steps to assemble your newly purchased product correctly and efficently.

Cam Lock Assembly Instructions

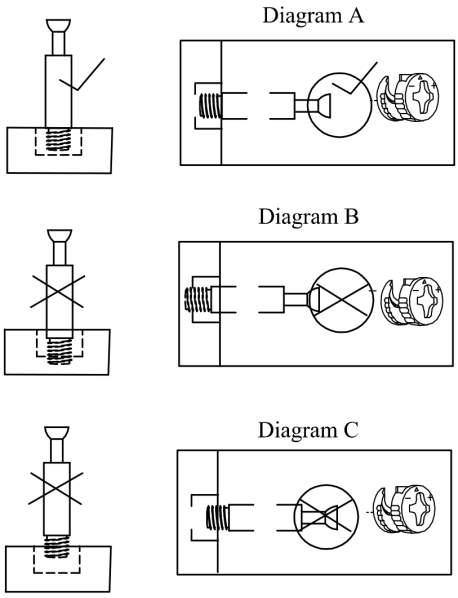

Insert Cam Bolt into hole as shown in diagram A.

Make sure not to insert the Cam Bolt:
Too deep as shown in figure B as this will cause the Cam Lock to be misaligned and unable to interlock properly.

Also avoid inserting the Cam Bolt too close to the surface of the hole as shown in figure C, as this will cause the Cam Lock to be too loose, and not interlock properly.

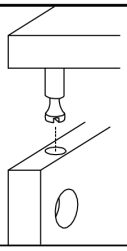

Connect the panels together.

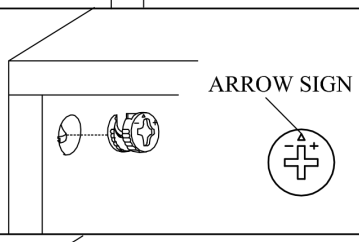

Insert the Cam Lock so the side opening fits over the head of the Cam Bolt.

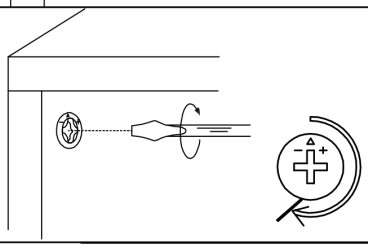

To tighten the Cam Lock, turn it clockwise on half a turn with a flat screwdriver.
**Do not use an automatic screwdriver as it may bend or break if too much power is imposed.*

Detail View - CABINET

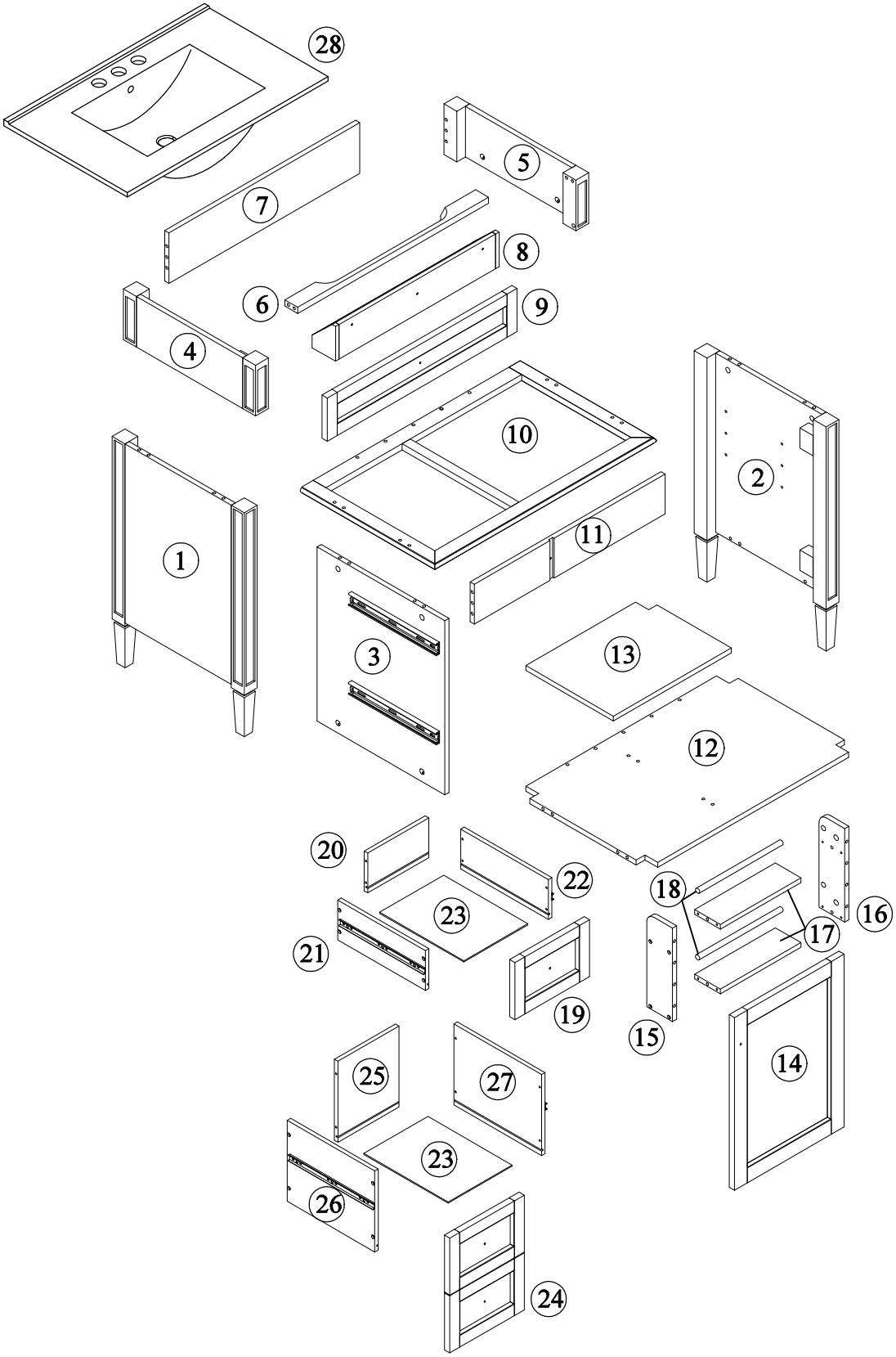

Identifying the Hardware-Identify the hardware using the illustrations below.

Part List

1 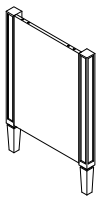 Side Panel (L) - 1pc	2 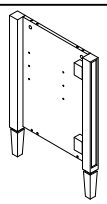 Side Panel (R) - 1pc
3 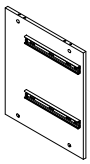 Mid Panel - 1pc	4 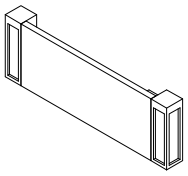 Side Panel Top (L) - 1pc
5 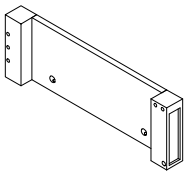 Side Panel Top (R) - 1pc	6 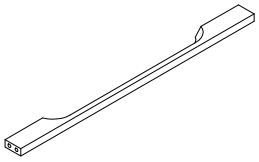 Crossbar Top - 1pc
7 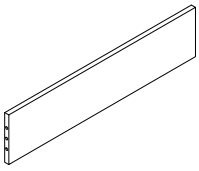 Panel Top Rear - 1pc	8 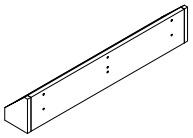 Flip Drawer - 1pc
9 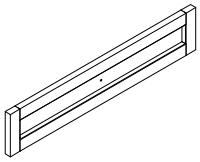 Flip Drawer Face - 1pc	10 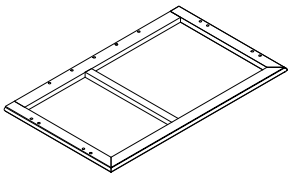 Frame Mid - 1pc
11 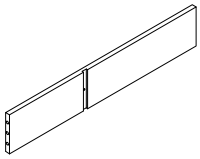 Rear Panel Bottom - 1pc	12 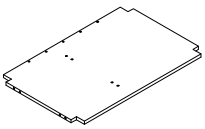 Bottom Panel - 1pc
13 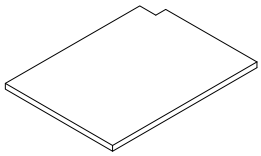 Adjustable Shelf - 1pc	14 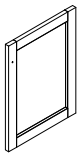 Door - 1pc

Part List

15 Left Panel of Door - 1pc	16 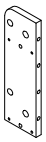 Right Panel of Door - 1pc
17 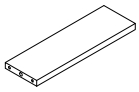 Mid Panel of Door - 2pcs	18 Round Bar - 2pcs
19 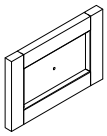 Drawer Front Top - 1pc	20 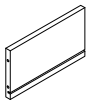 Drawer Rear Top - 1pc
21 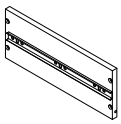 Drawer Side Top(L) - 1pc	22 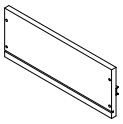 Drawer Side Top(R) - 1pc
23 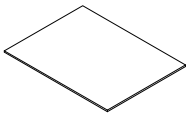 Drawer Bottom - 2pcs	24 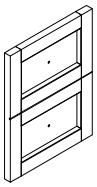 Drawer Front Bottom - 1pc
25 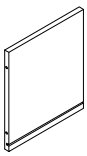 Drawer Rear Bottom - 1pc	26 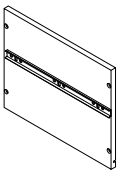 Drawer Side Bottom (L) - 1pc
27 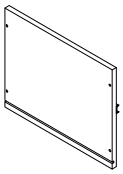 Drawer Side Bottom (R) - 1pc	28 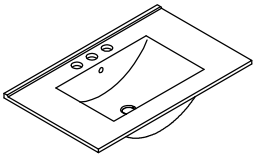 Sink - 1pc

Hardware List

A ø6x35mm	B ø14.5x12mm	C ø8xø4x25mm
Three in one bolts(35pcs)	Three in one lock(35pcs)	Round head screw(3pcs)
D ø8xø4x32mm	E	F ø5/32"x20mm
Round head screw(24pcs)	Handle(5pcs)	Handle screw(1pc)
G ø5/32"x25mm	H	I
Handle screw(4pcs)	Duo Forte (1pc)	Rotary Hinge(2pcs)
J ø6xø3x12mm	K	L ø7xø3.5x15mm
Flat head screw(8pcs)	Damping hinge (2pcs)	Flat head screw(12pcs)
M	N ø8x30mm	O
Laminate pad(4pcs)	Wood dowel(36pcs)	Anti fall hardware(1set)

STEP: 1

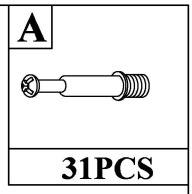

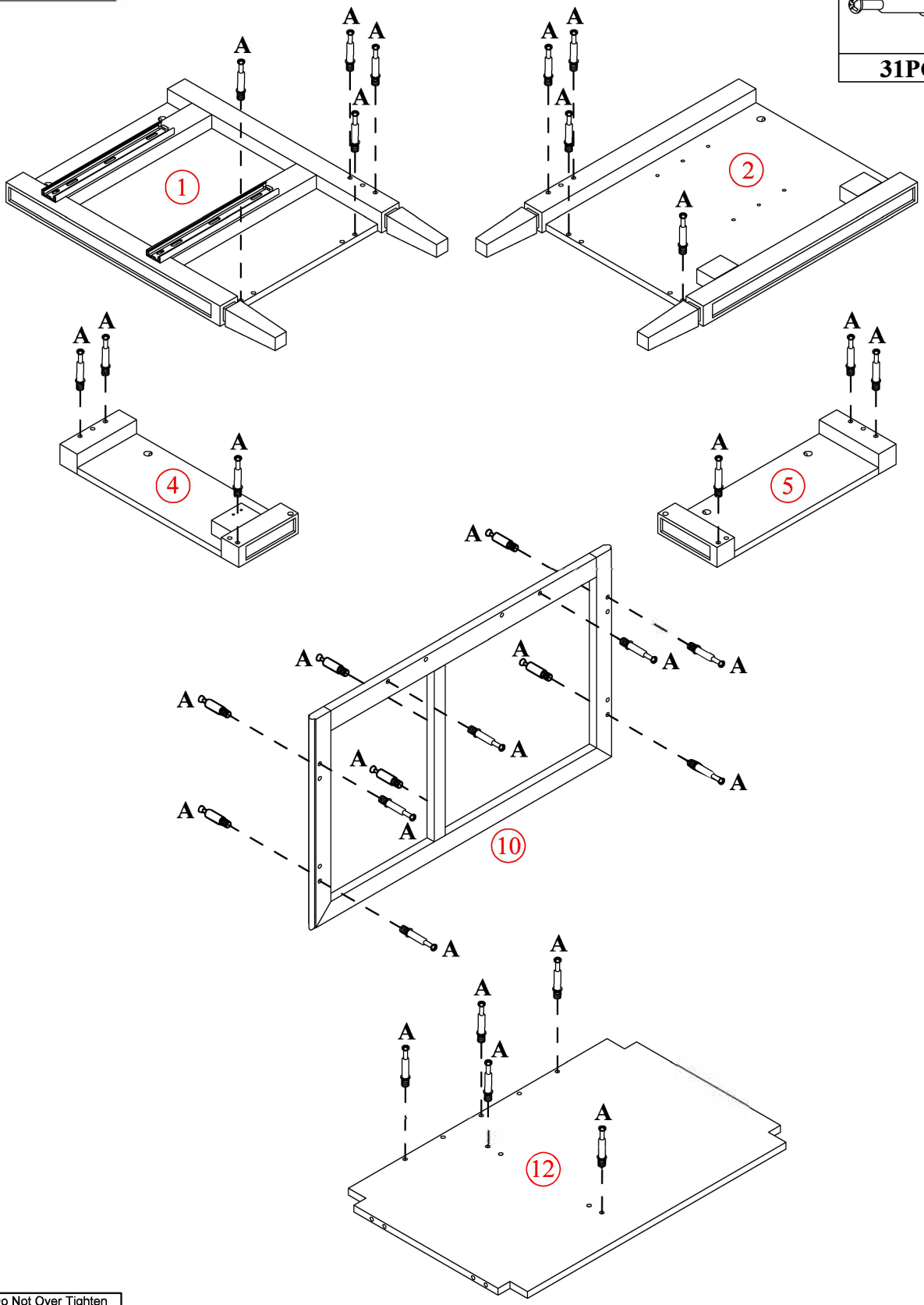

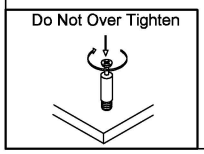

STEP: 2

B	C	N
5PCS	1PC	4PCS

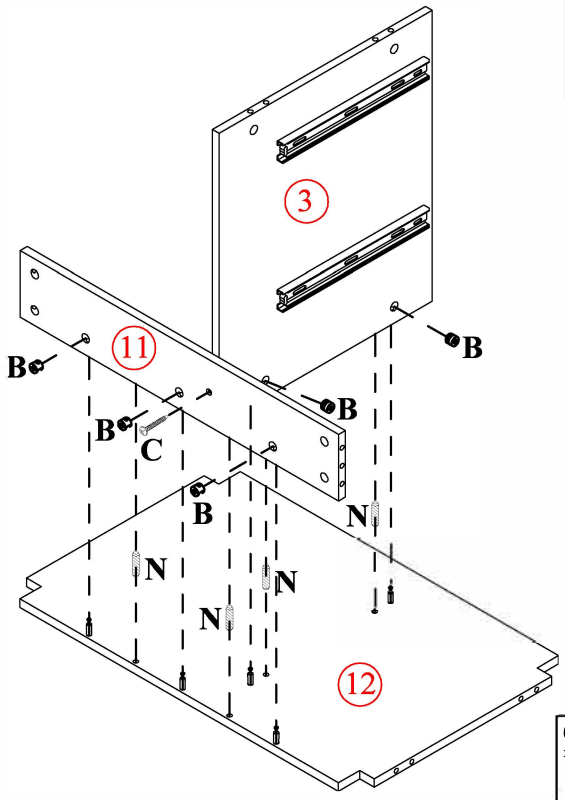

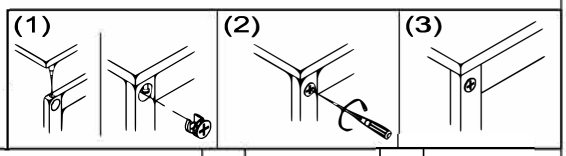

STEP: 3

B	N
8PCS	6PCS

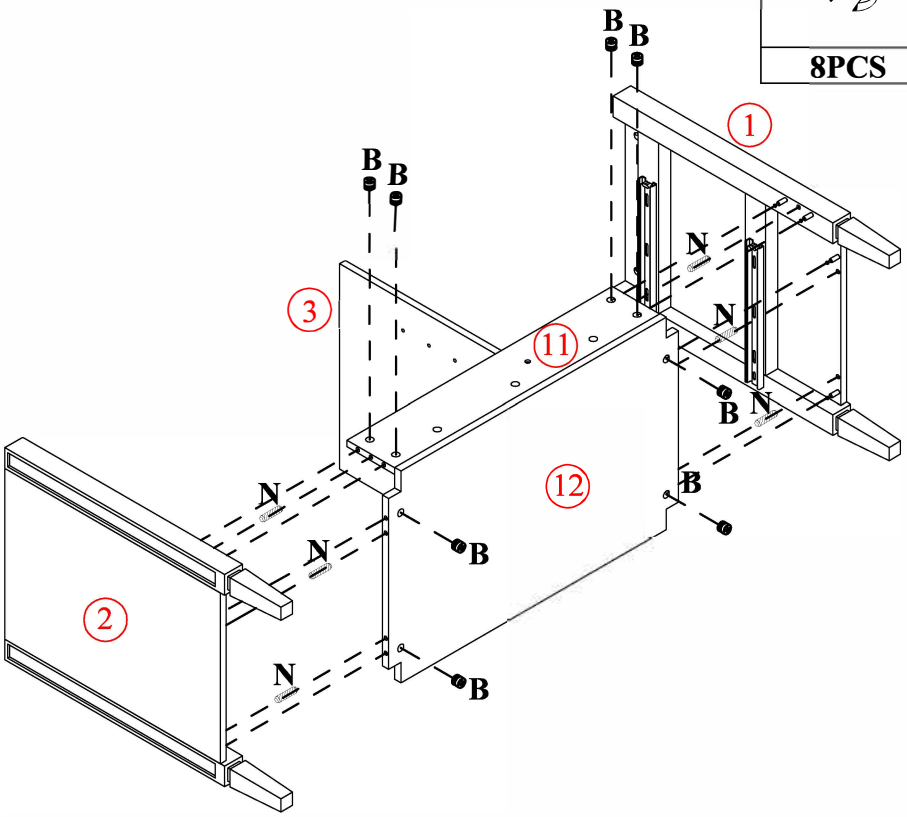

STEP: 4

B	N
6PCS	6PCS

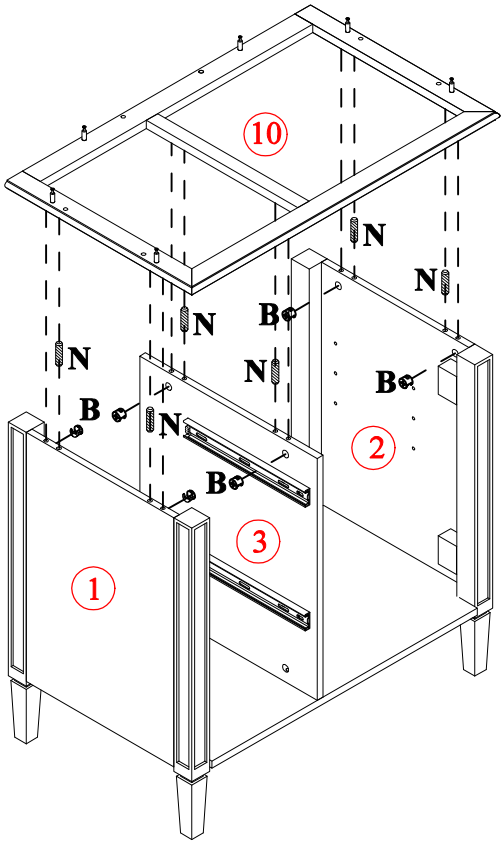

STEP: 5

C	I	J
2PCS	2PCS	4PCS

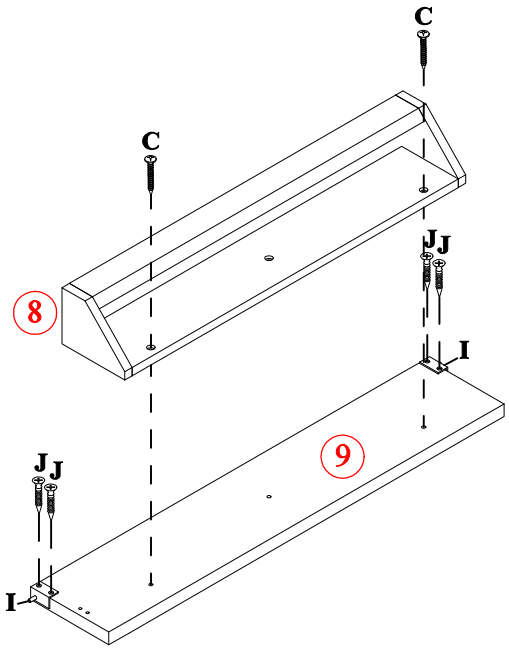

STEP: 6

B	N
6PCS	6PCS

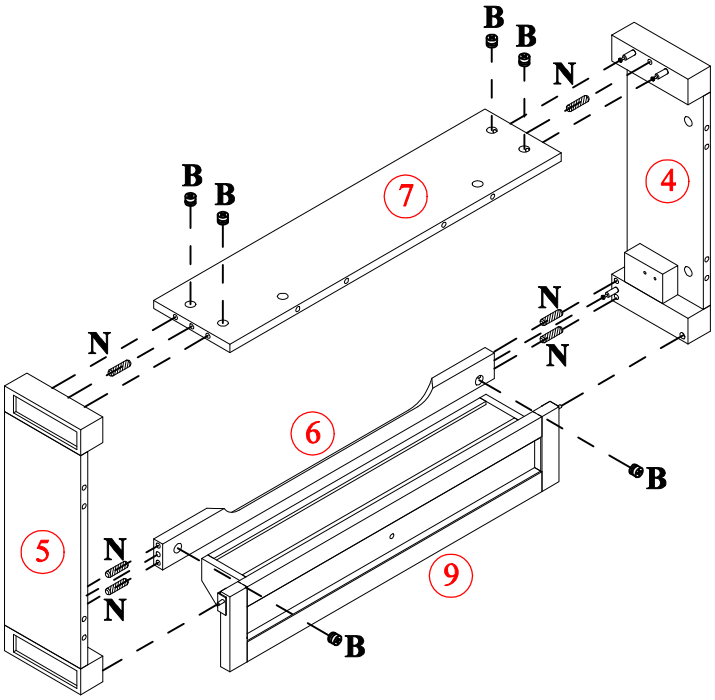

STEP: 7

H	J
1PC	4PCS

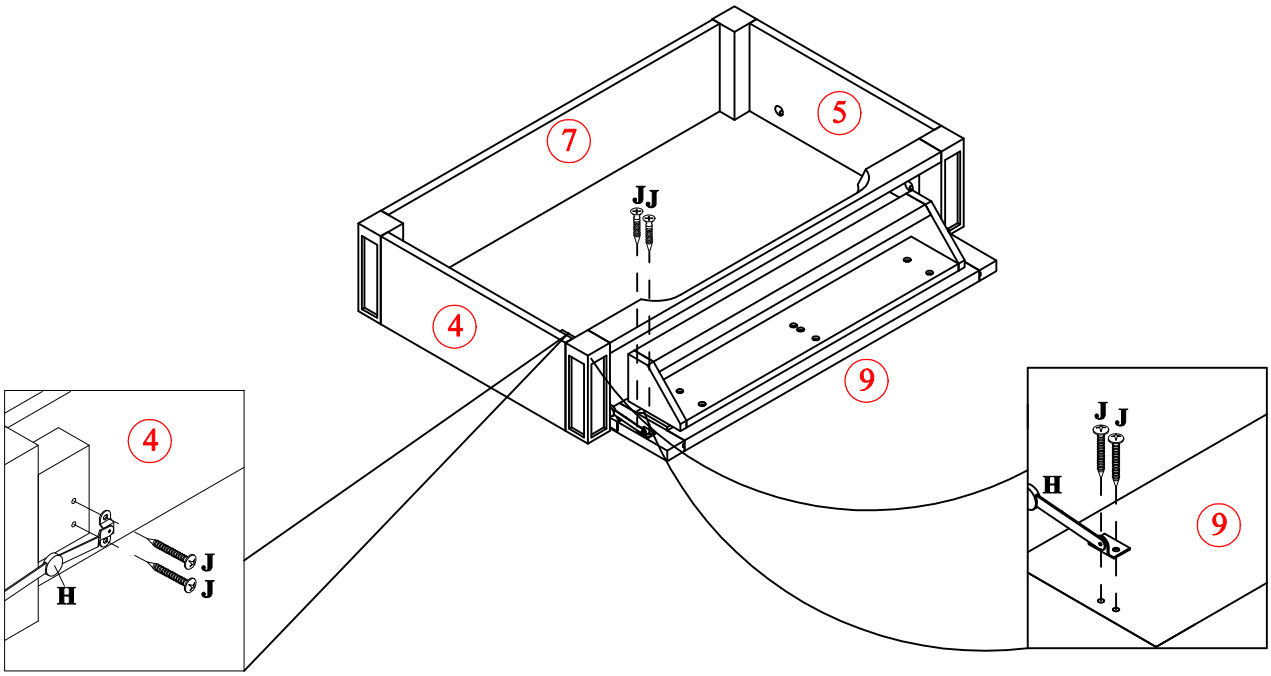

STEP: 8

B	N
6PCS	6PCS

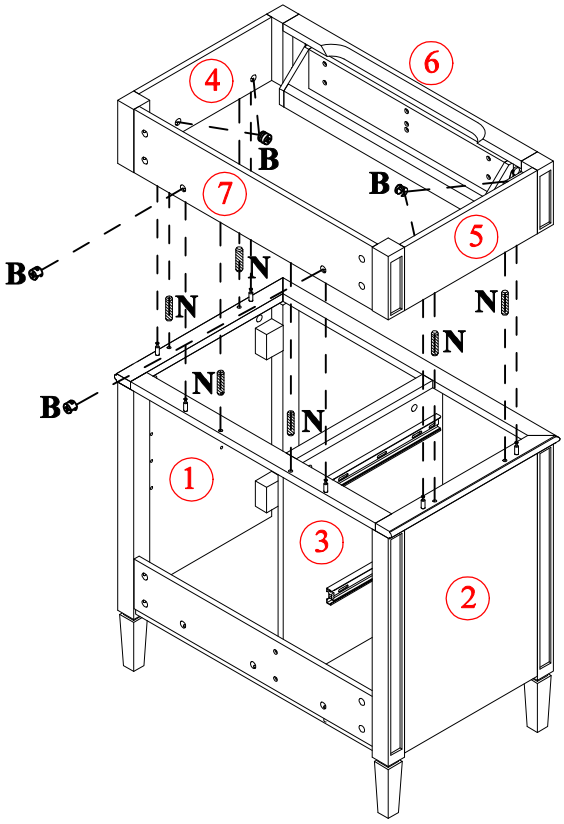

STEP: 9

D	N
8PCS	4PCS

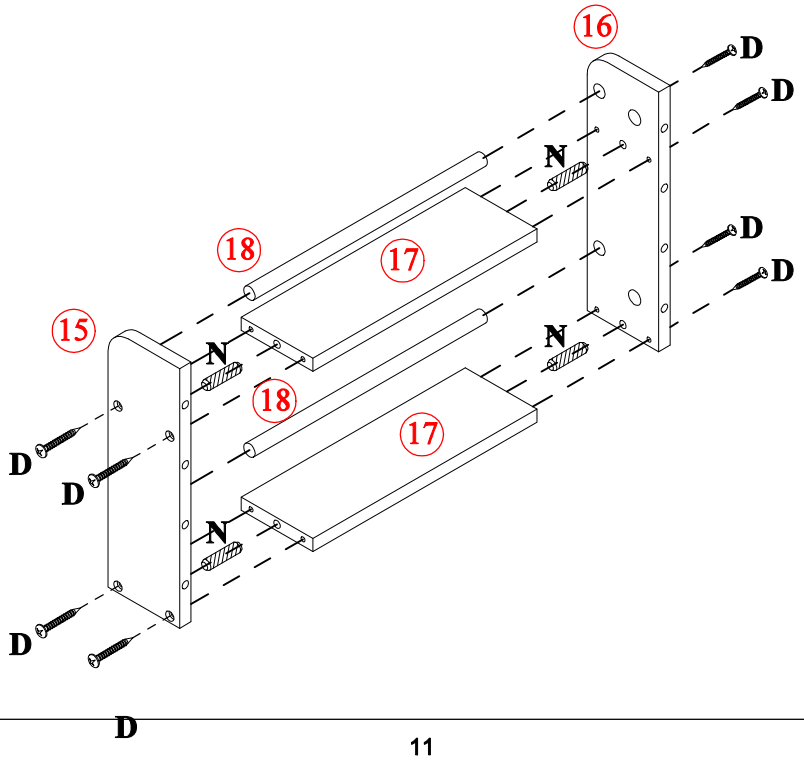

STEP: 10

A
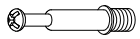
4PCS

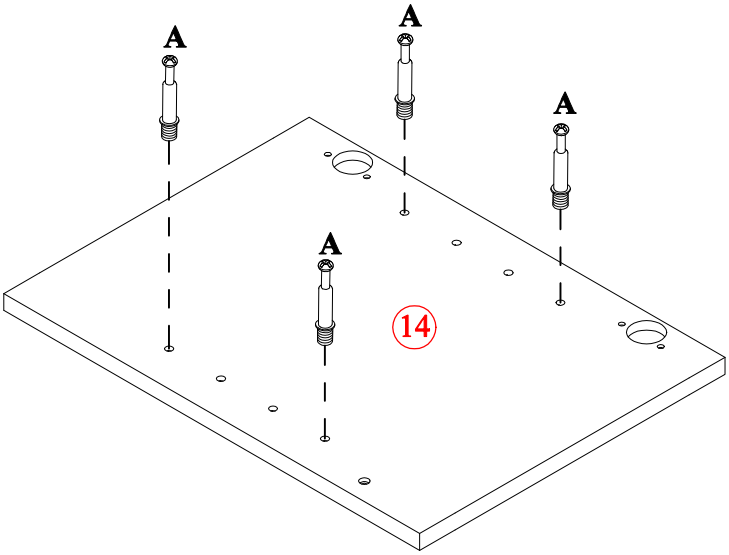

STEP: 11

B	N
	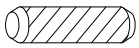
4PCS	4PCS

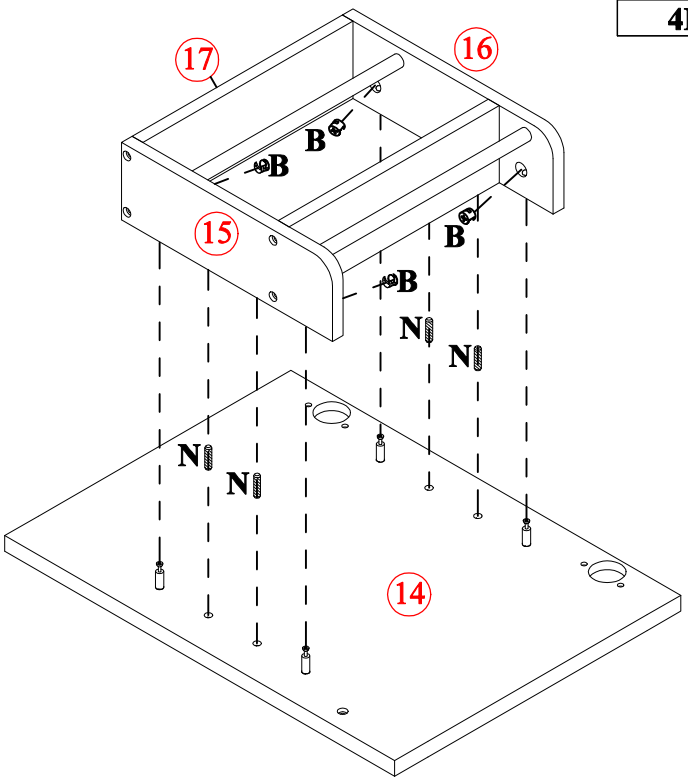

STEP: 12

K	L
2PCS	4PCS

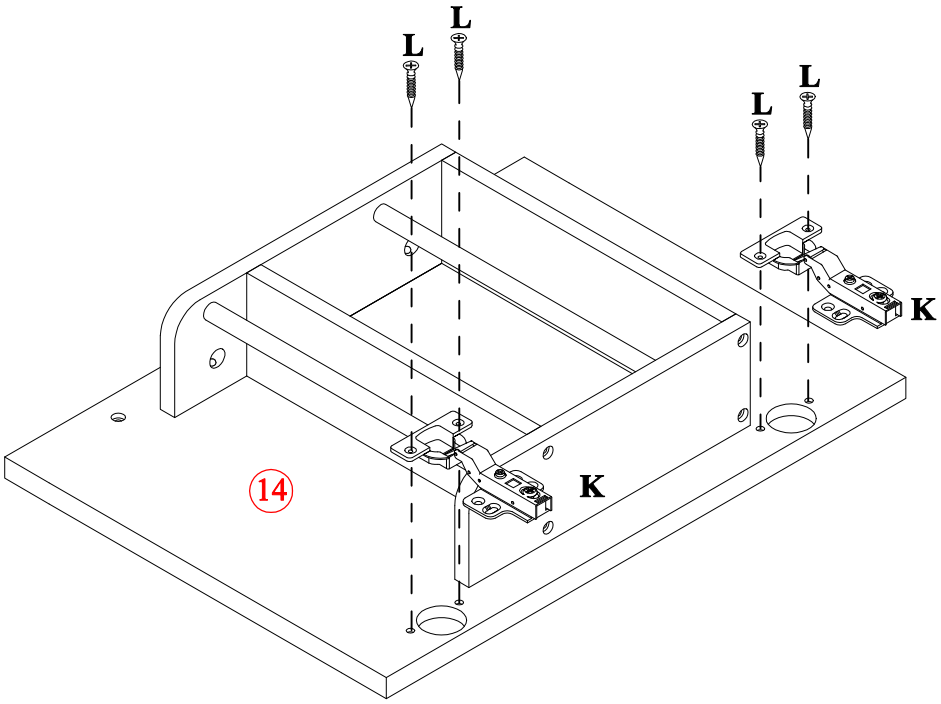

STEP: 13

E	F	G	L
2PCS	1PC	1PC	8PCS
	(5/32" x 20mm)	(5/32" x 25mm)	

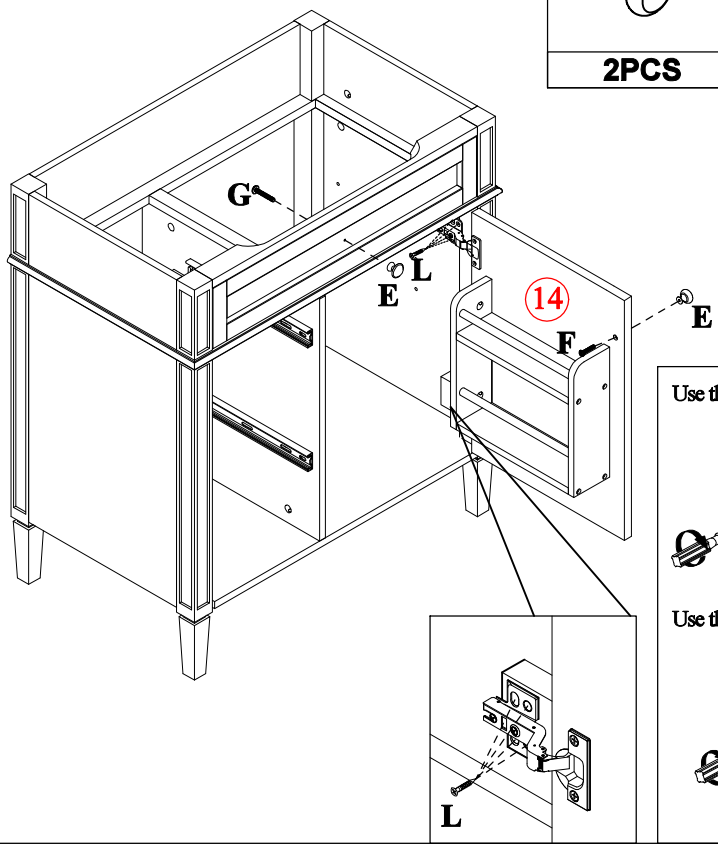

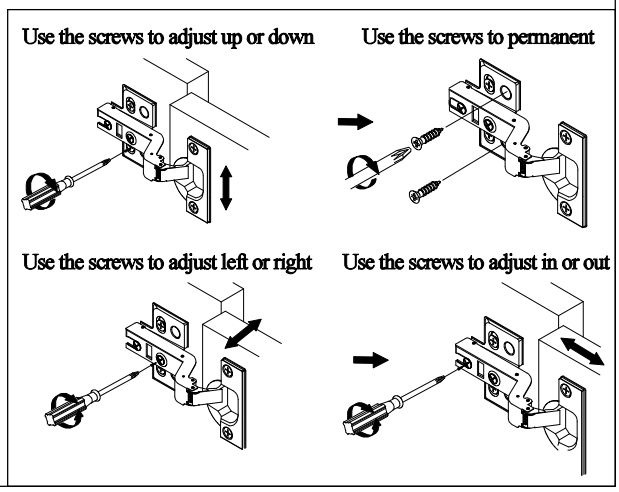

STEP: 14

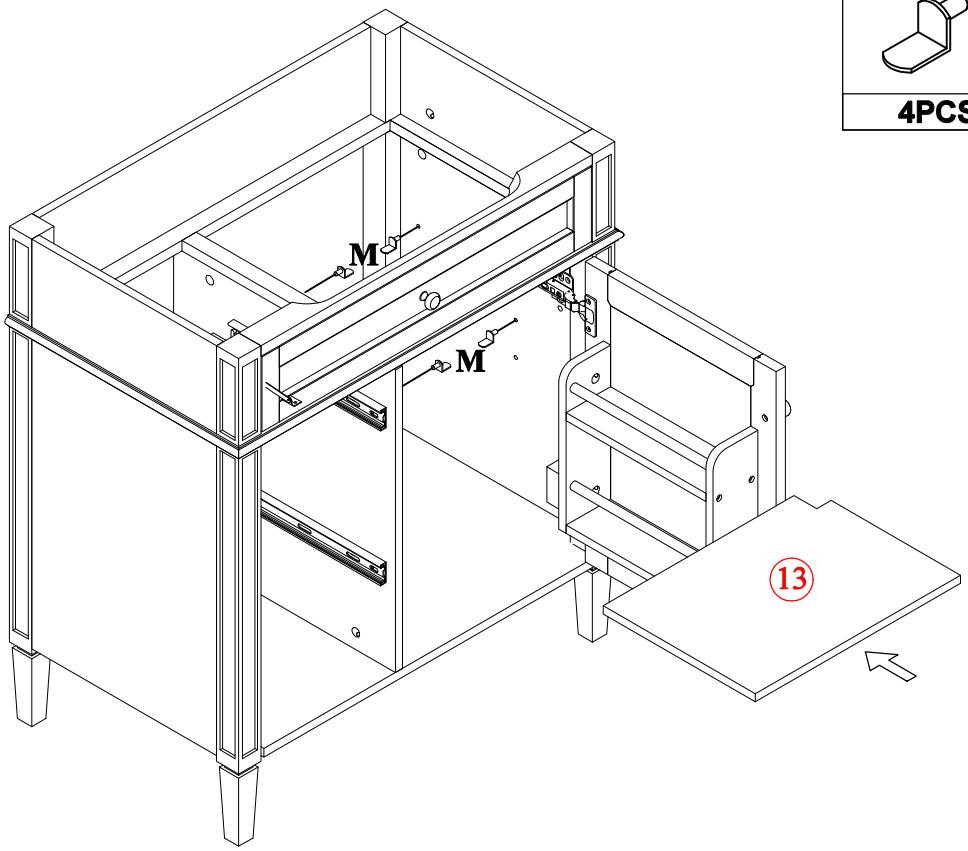

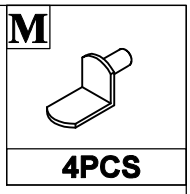

STEP: 15

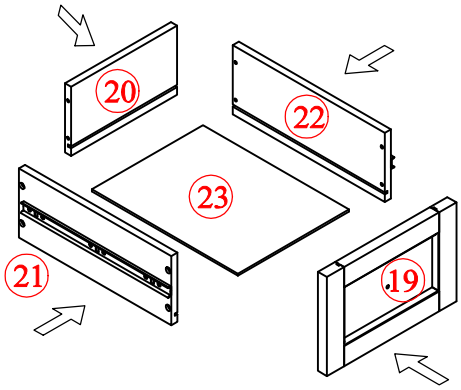

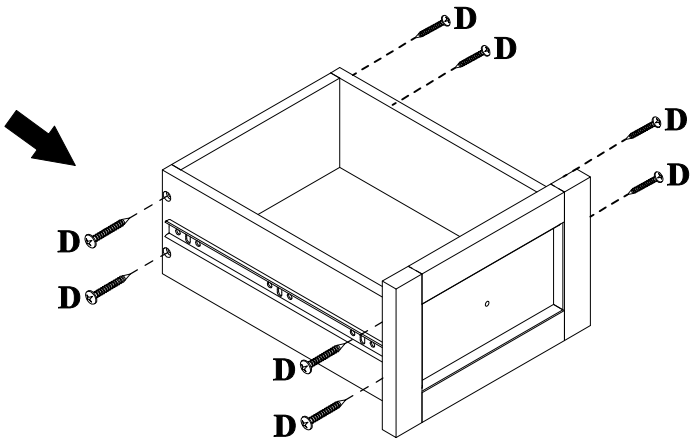

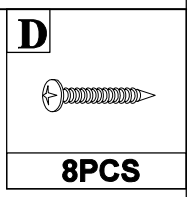

STEP: 16

E	G
1PC	1PC

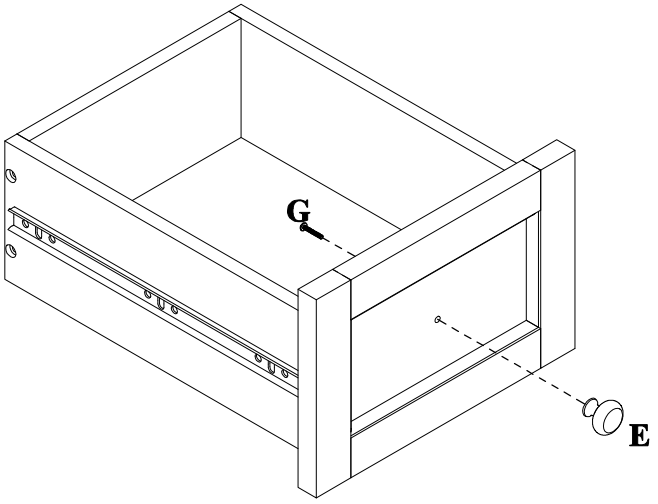

STEP: 17

D
8PCS

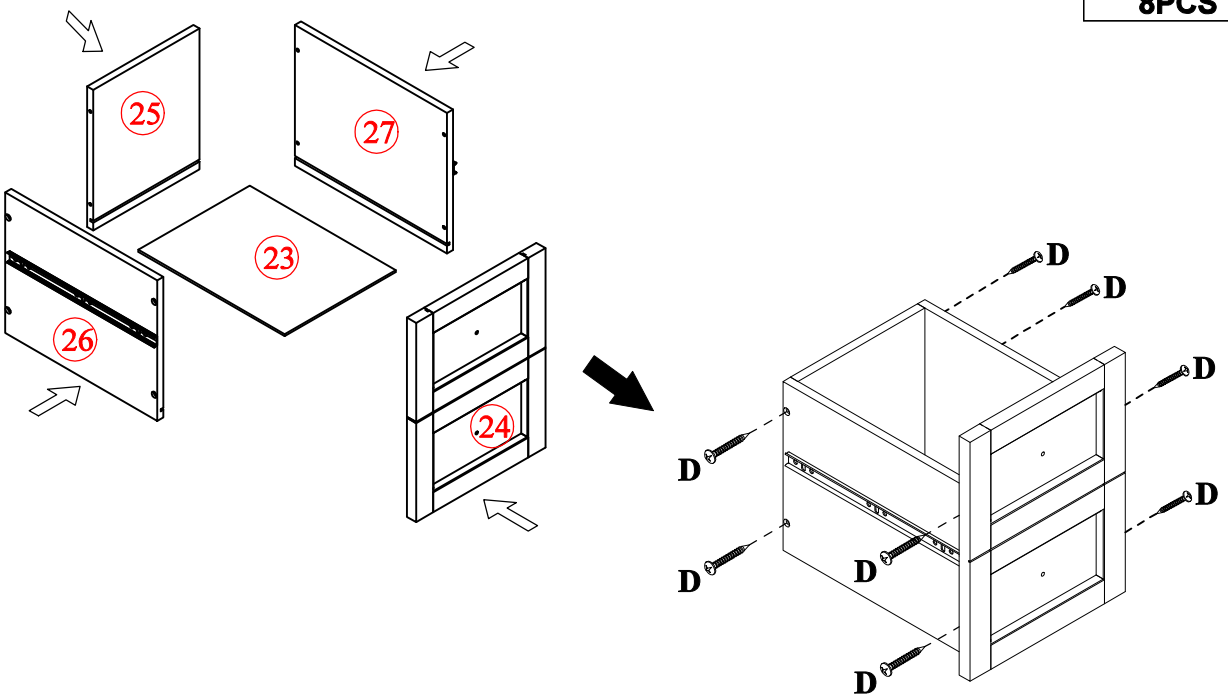

STEP: 18

E	G
2PCS	2PCS

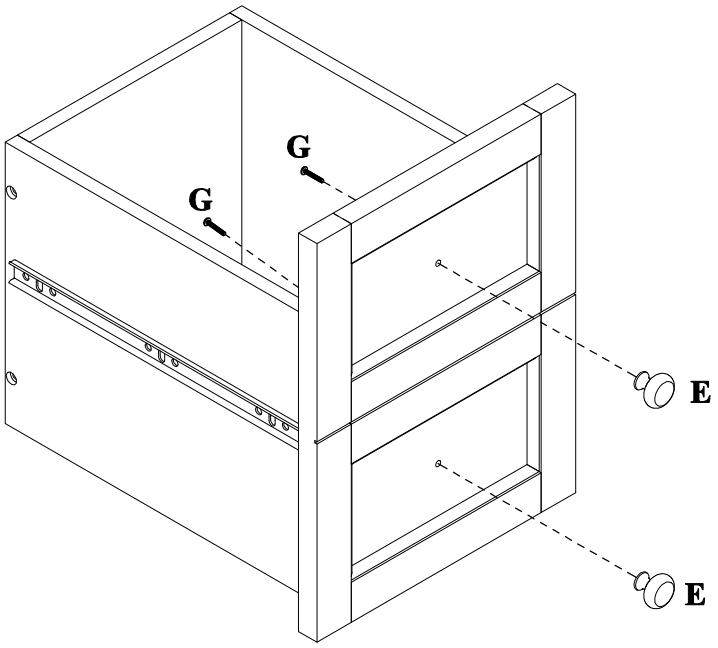

STEP: 19

O

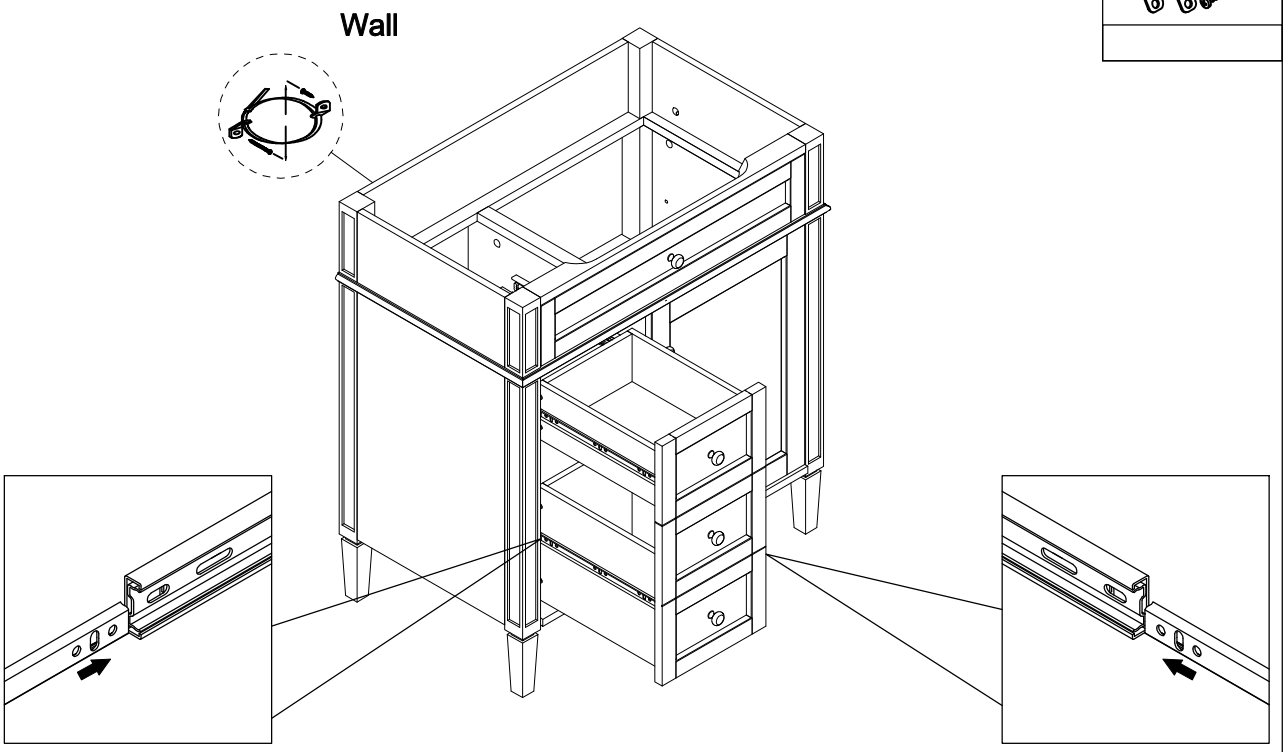

STEP: 20

Install the sink (if applicable) on the cabinet with glue.
Let stand for 24 hours

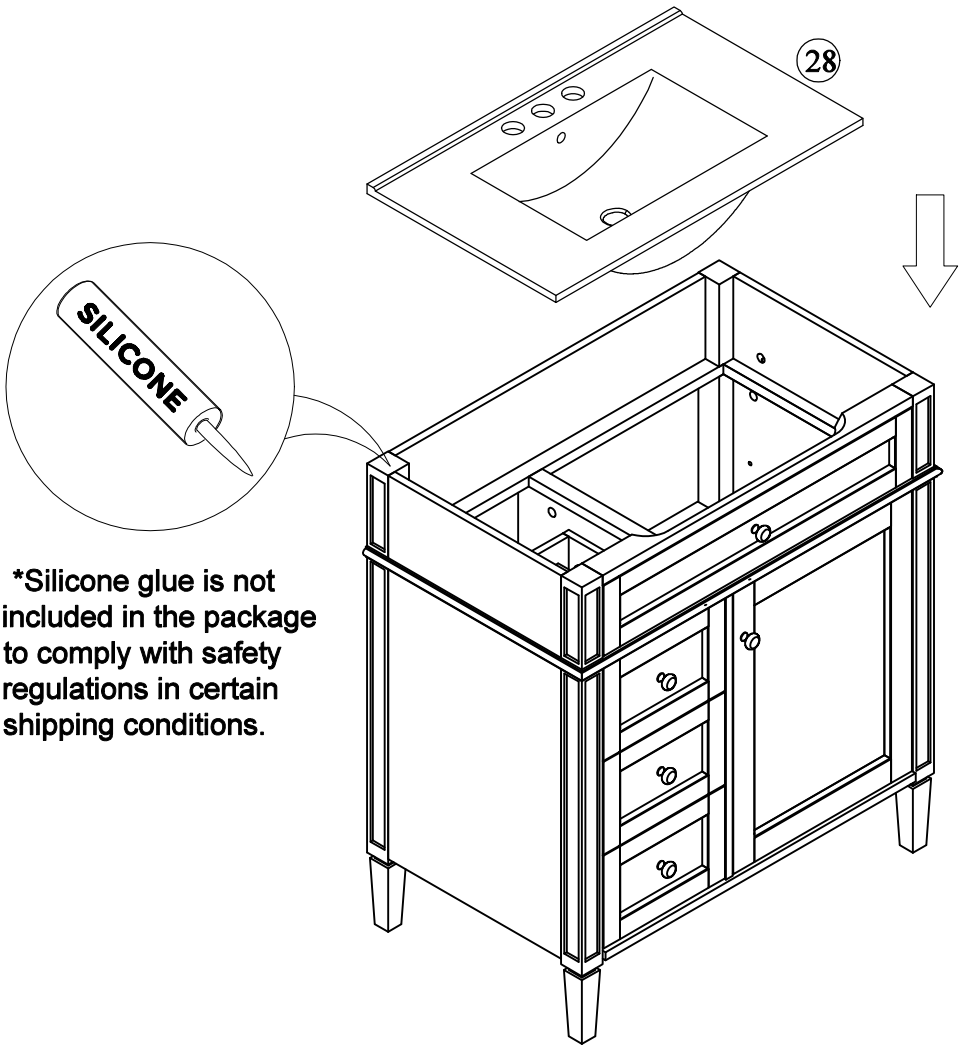

*Silicone glue is not included in the package to comply with safety regulations in certain shipping conditions.

STEP: 21

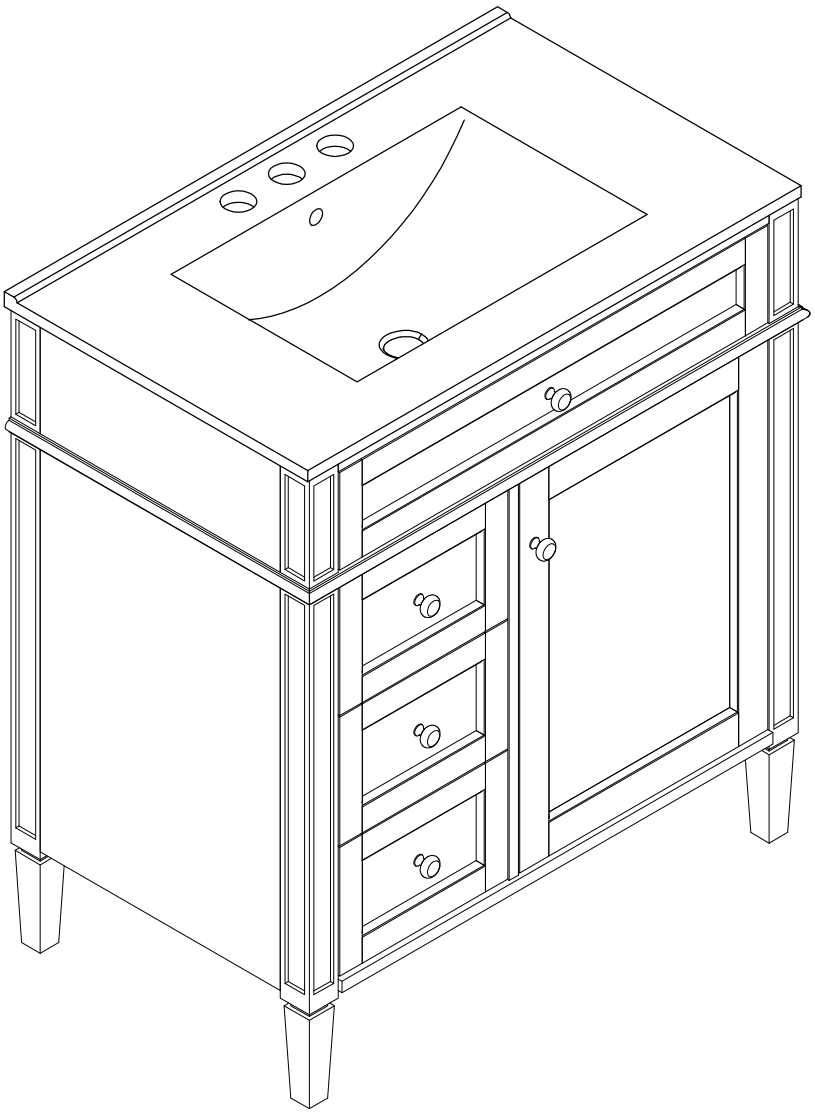

HINGE ADJUSTMENTS

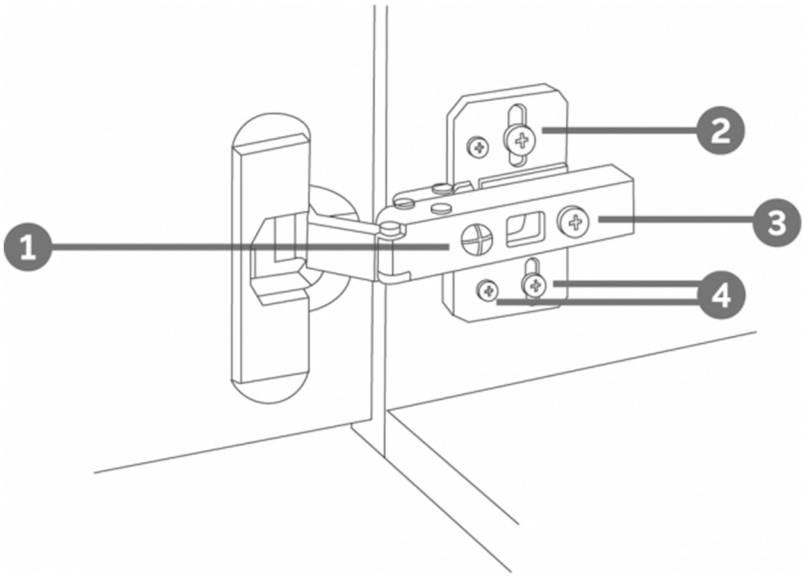

❶ Sideways / Tilt adjustment

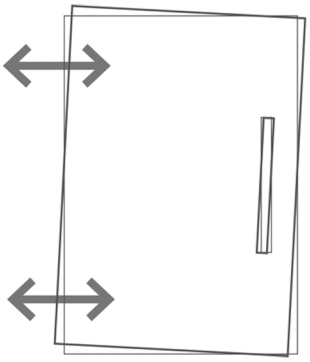

Turn the screw
clockwise to move the door further away from the side of the cabinet
anticlockwise to move the door closer to the side of the cabinet

❷ ❹ Height adjustment

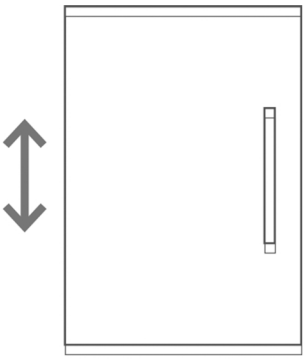

While supporting the weight of the door, turn the screws
clockwise to move the door up
anticlockwise to move the door down

❸ Forward and back adjustment

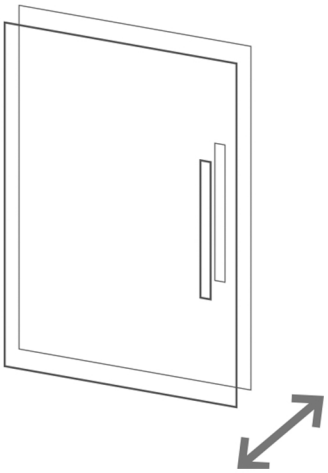

If the gap between the back of the door and the cabinet is too small, and the door may not close fully. Turn the screw
clockwise to decrease the gap between the door and the cabinet
anticlockwise to increase the gap between the door and the cabinet