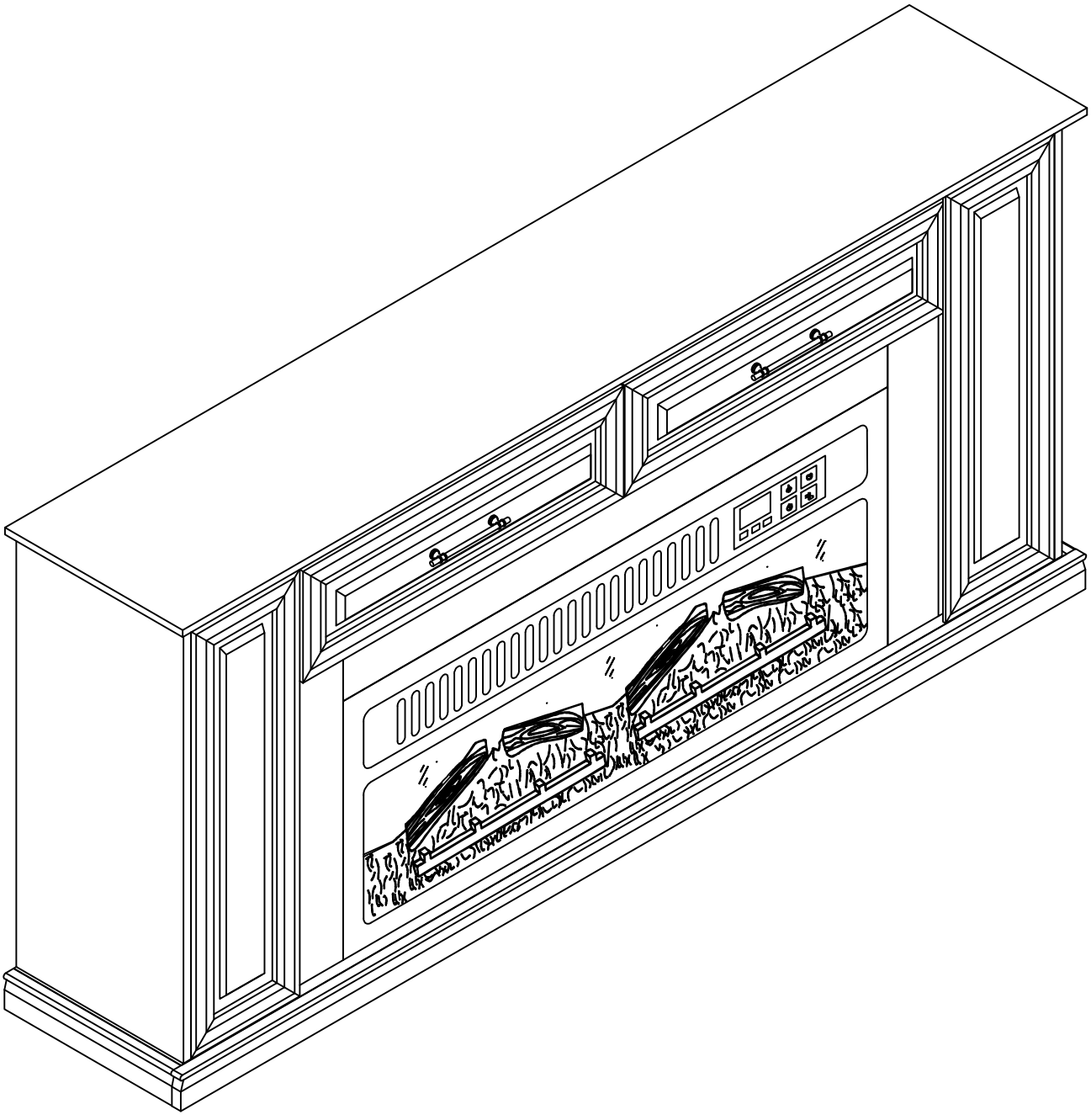

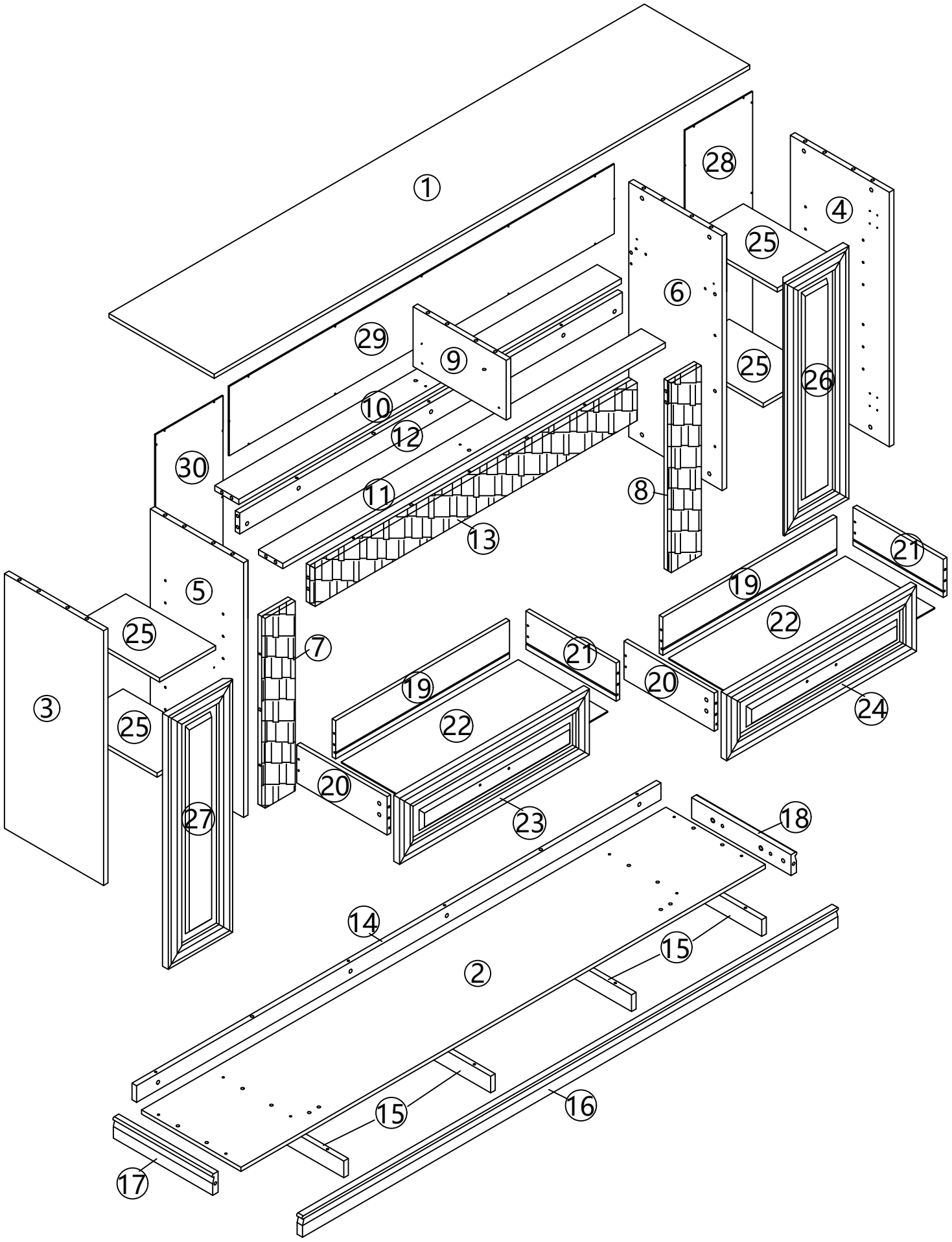
1
28
4
25
6
29
9
25
26
10
12
30
11
8
13
21
5
19
22
25
7
21
20
19
3
22
24
25
20
27
23
18
14
15
2
15
16
17

Hardware

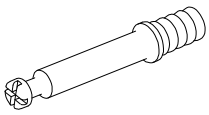 A x 58 +2PCS	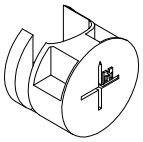 B x 58 +2PCS	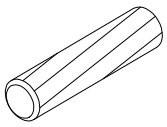 Ø8*30mm C x 24 +2PCS	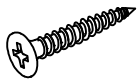 Ø3.5*35mm D x 8PCS
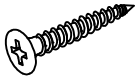 Ø4*40mm E x 2PCS	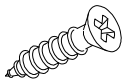 Ø3.5*15mm F x 28 +2PCS	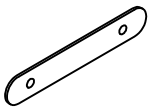 G x 2PCS	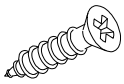 Ø3.5*12mm H x 16 +2PCS
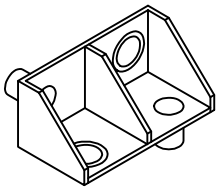 I x 9PCS	 J x 18 +2PCS	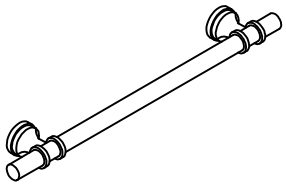 K x 2PCS	 L x 4PCS
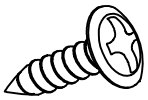 Ø3.5*10mm M x 34 +2PCS	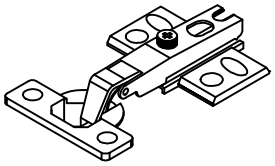 N x 4PCS	 O x 16 +1PC	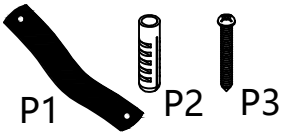 P1 P2 P3 P x 2PSC
 CL  CR Q X 2PCS	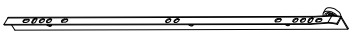 DL 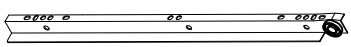 DR Q X 2PCS	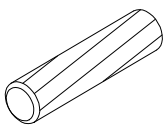 Ø6*30mm R x 20 +1PC	

ASSEMBLY MATERIAL

Item no.	Reference Image	Oty.
1	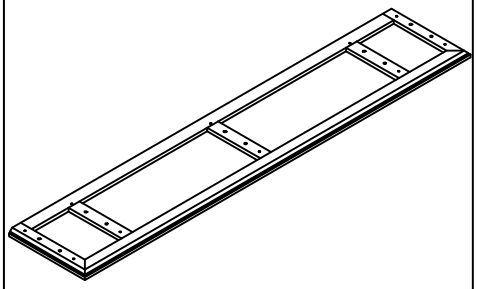	x 1
2	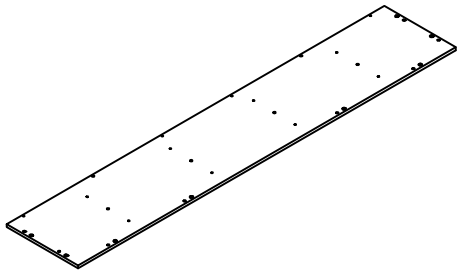	x 1
3	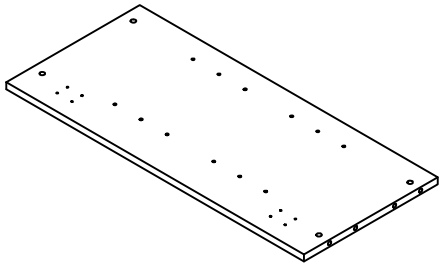	x 1
4	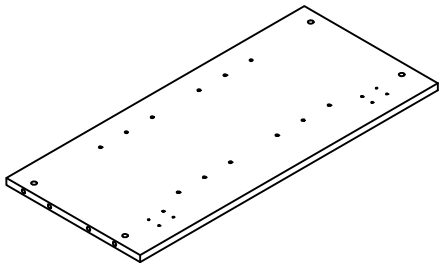	x 1
5	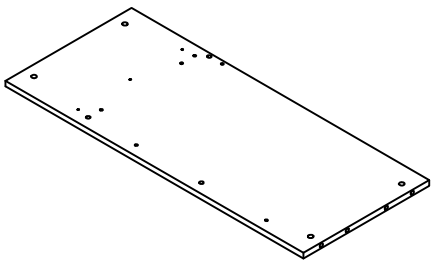	x 1
6	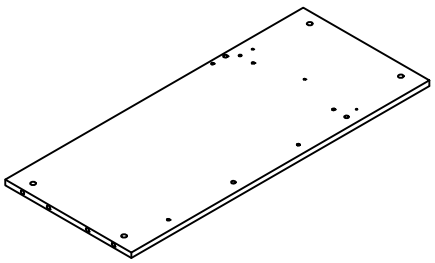	x 1

Item no.	Reference Image	Oty.
7	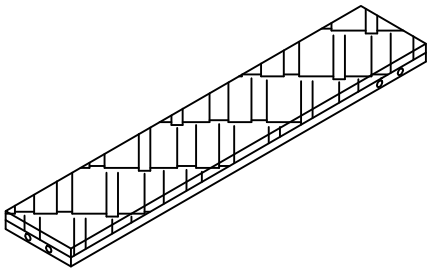	x 1
8	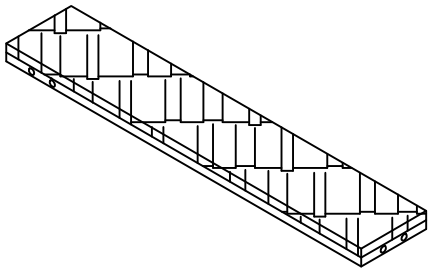	x 1
9	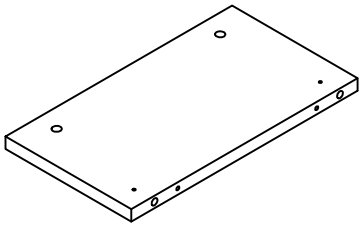	x 1
10	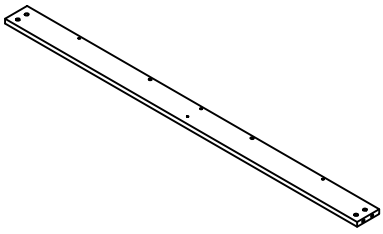	x 1
11	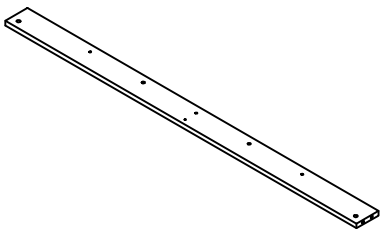	x 1
12	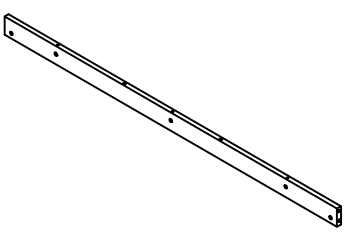	x 1

ASSEMBLY MATERIAL

Item no.	Reference Image	Oty.
13	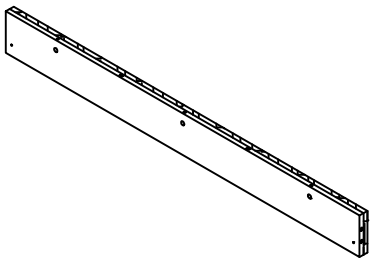	x 1
14	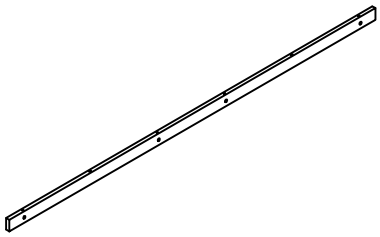	x 1
15	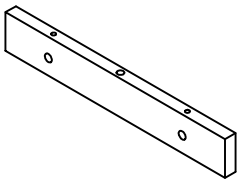	x 4
16	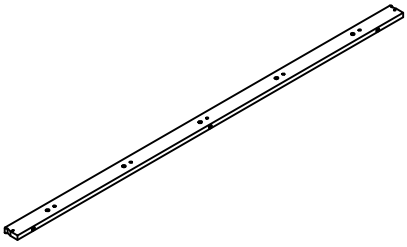	x 1
17	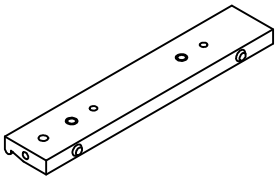	x 1
18	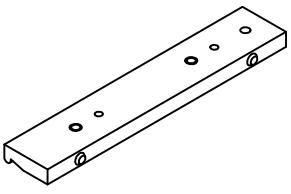	x 1

Item no.	Reference Image	Oty.
19	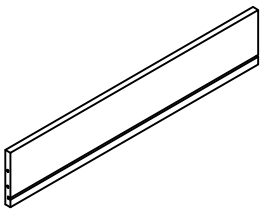	x 2
20	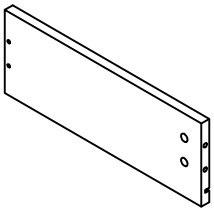	x 2
21	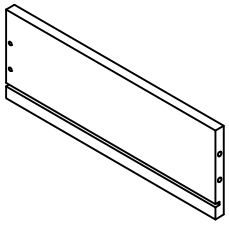	x 2
22	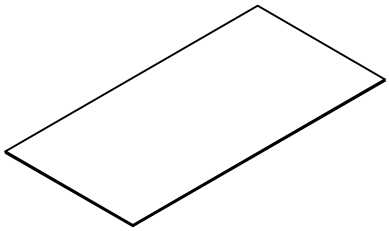	x 2
23	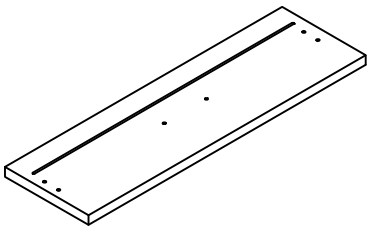	x 1
24	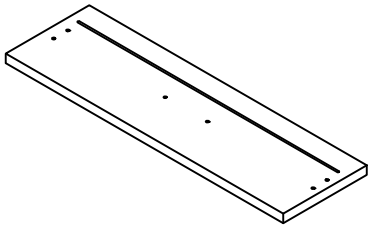	x 1

ASSEMBLY MATERIAL

Item no.	Reference Image	Oty.
25	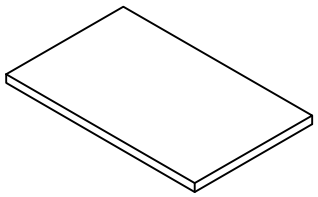	x 4
26	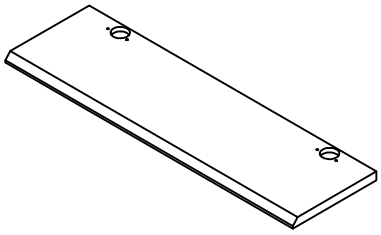	x 1
27	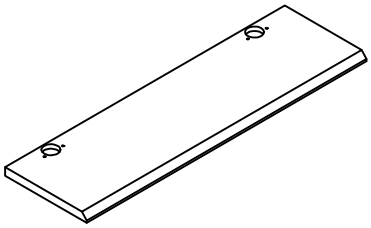	x 1

Item no.	Reference Image	Oty.
28	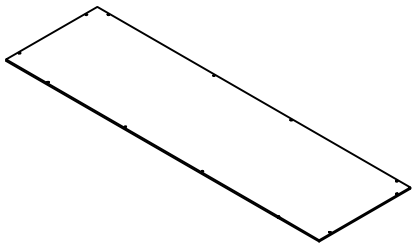	x 1
29	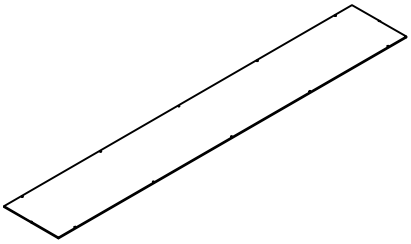	x 1
30	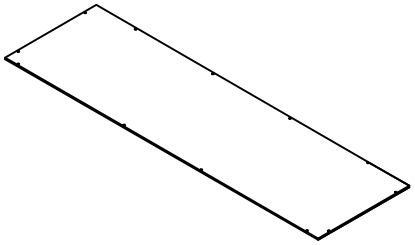	x 1

How to use the cam lock system

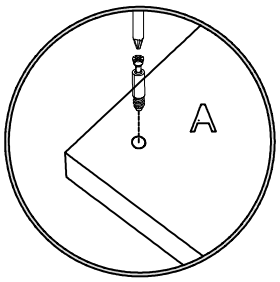

1.Screw cam bolt into panel

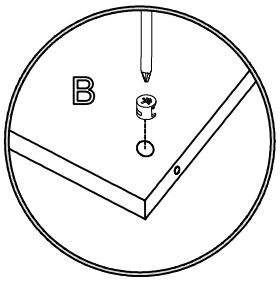

2.Push cam into panel - arrow feature on cam top points to panel edge

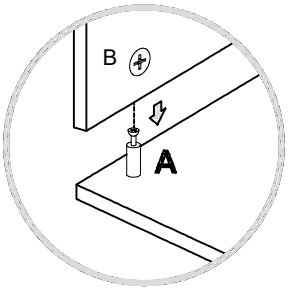

3.Aligu cam bolt(s) with cam(s) and insert all the way into cross-bored hole(s)

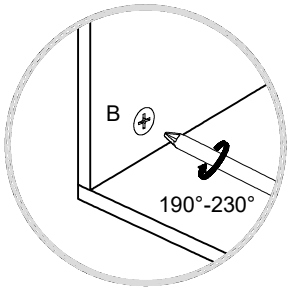

3.Rotate cam(s) clockwise 190°-230° to lock panels together

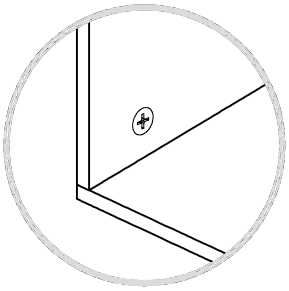

5.Panels should be tight against each other and connection should be rigid

Insert the wood dowel C at least half way by tapping lightly with a rubber mallet ,IF NECESSARY.

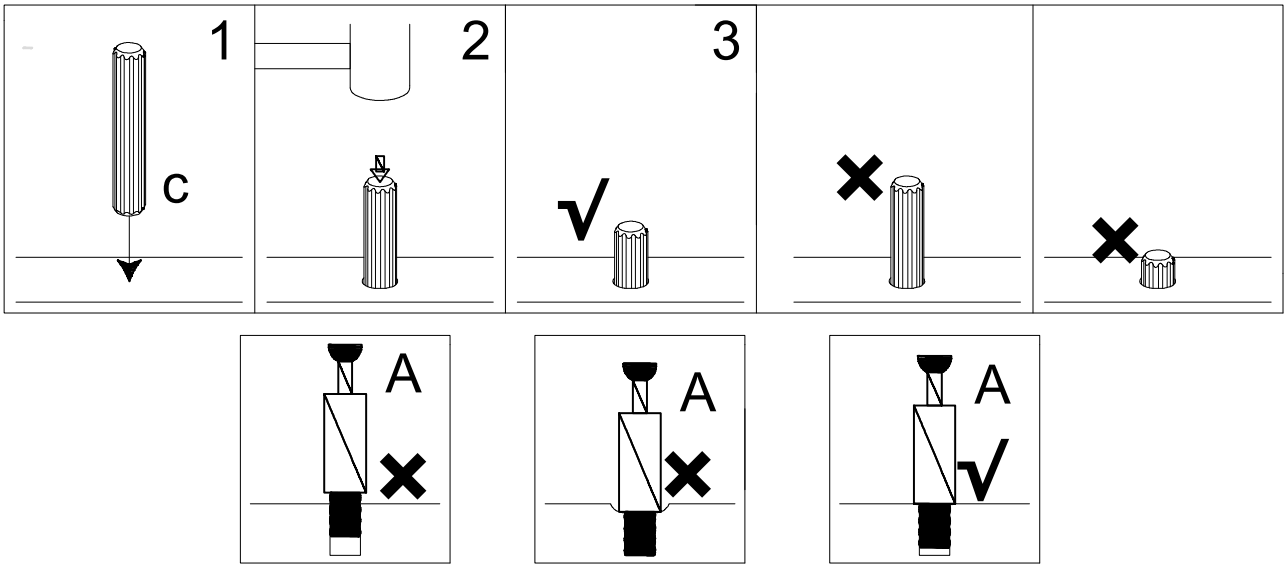

- Unit must be placed on a level surface or leveled with included hardware (when applicable).
- Do not sit or stand on or allow children to climb,sit or stand on the assembled product.
- For safety reasons,it is imperative that this unit be mounted to the wall.
- Do not use without installing the tip restraint.
- Unit can tip over causing severe injury or death.
- Do not exceed the recommended weight limits.
- Evenly distribute the weight on each level and always keep the heavier loads on the bottom.
- Before cutting,drilling or hammering into any wall or floor surface,verify the location of electrical, plumbing and gas lines.Cutting may cause serious injury.

Step 1

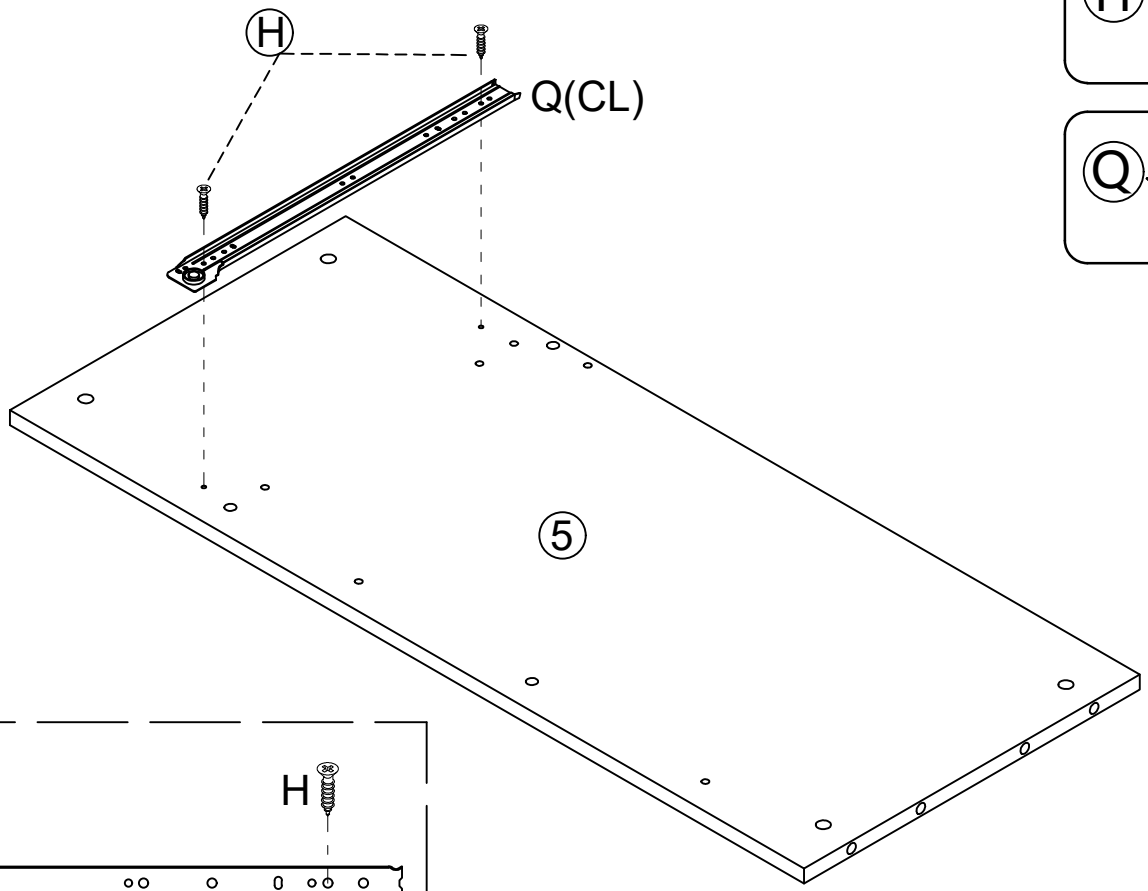
H
Q(CL)
5

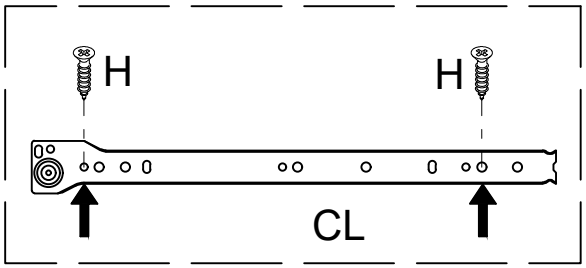
H
H
CL

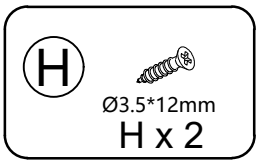
H
Ø3.5*12mm
H x 2

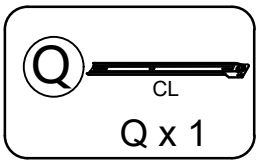
Q
CL
Q x 1

Step 2

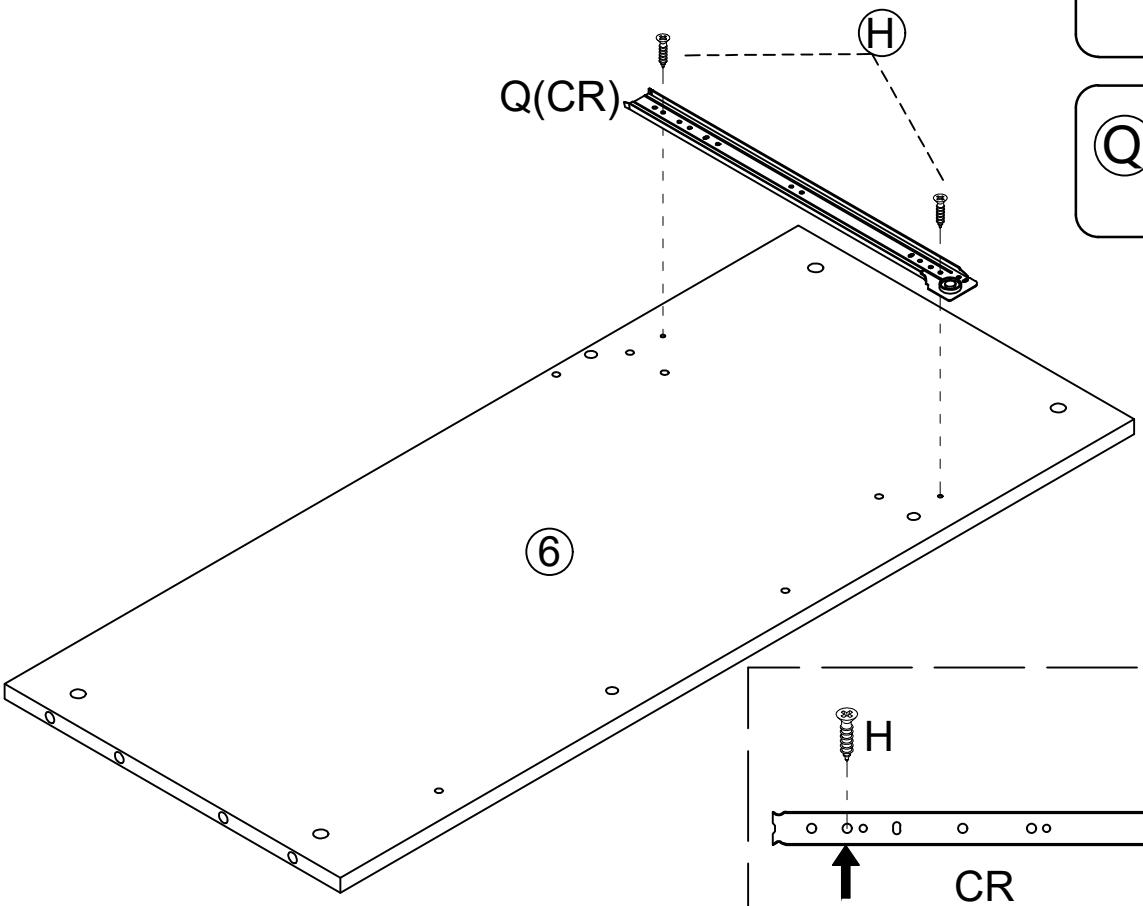
H
Q(CR)
6

H
H
CR

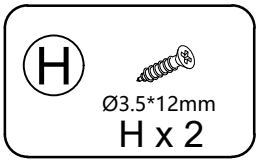
H
Ø3.5*12mm
H x 2

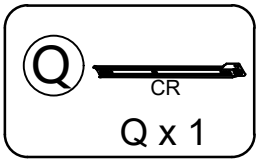
Q
CR
Q x 1

Step 3

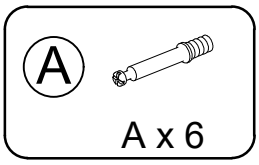

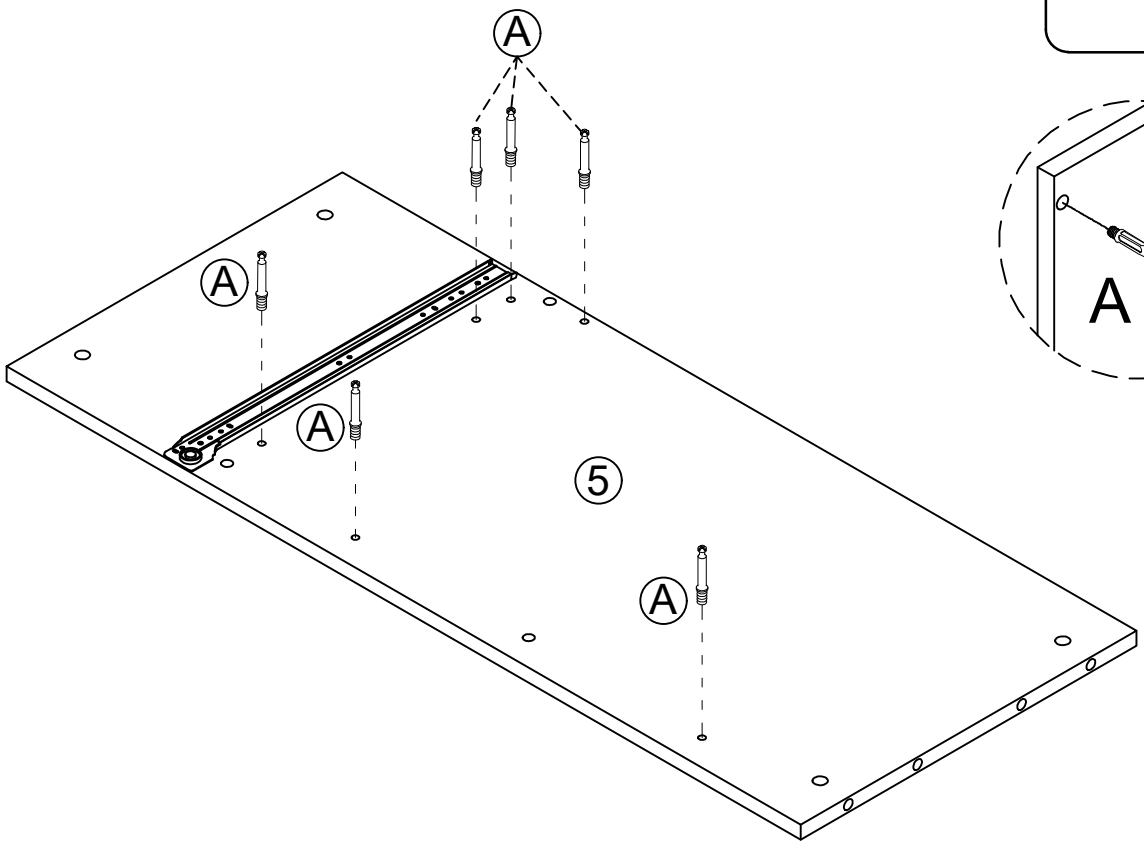

Step 4

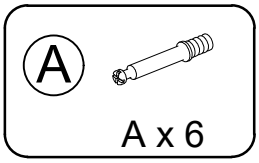

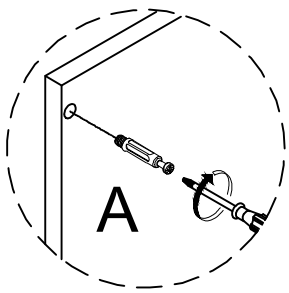

Step 5

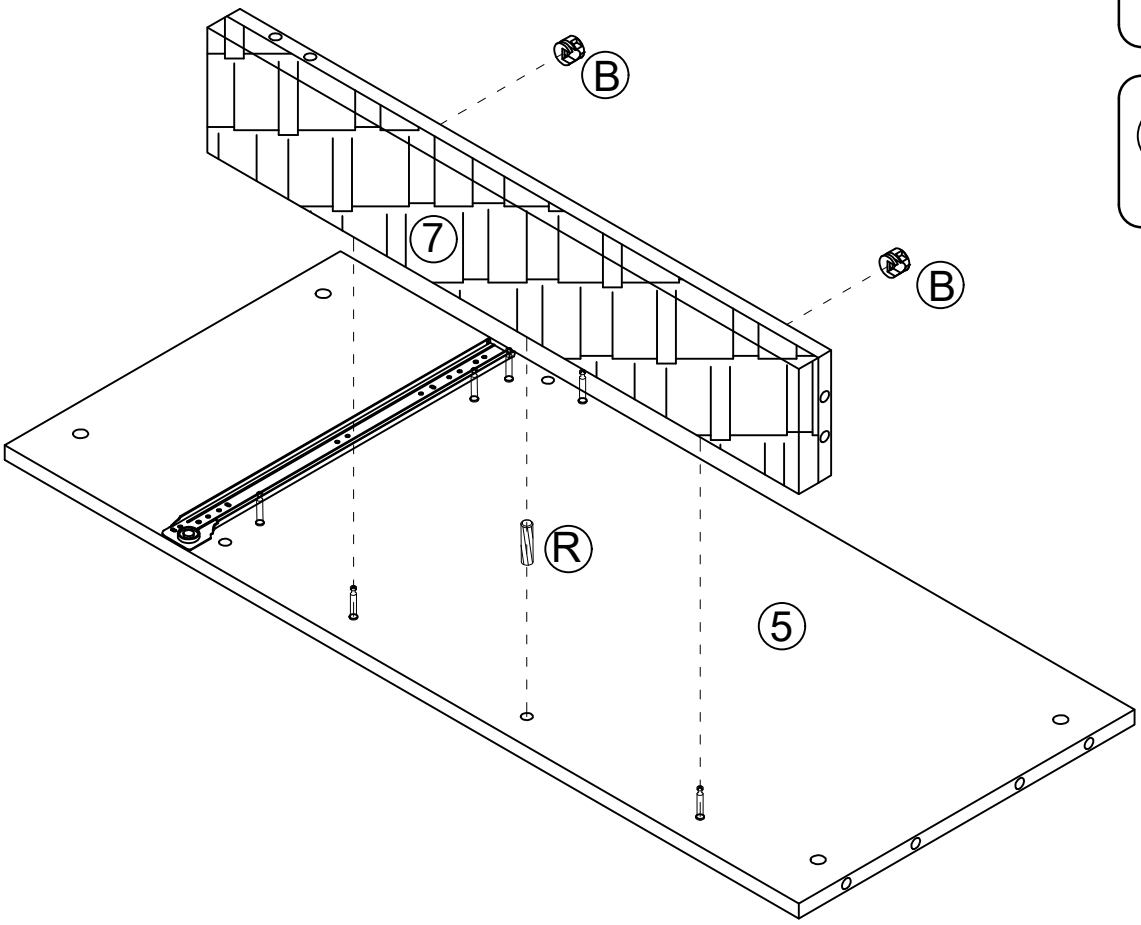

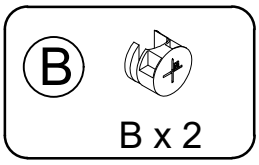

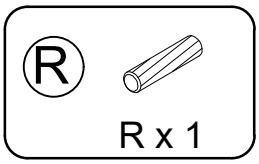

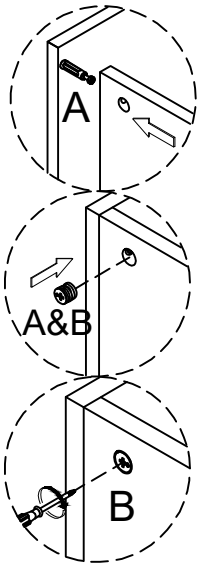

Step 6

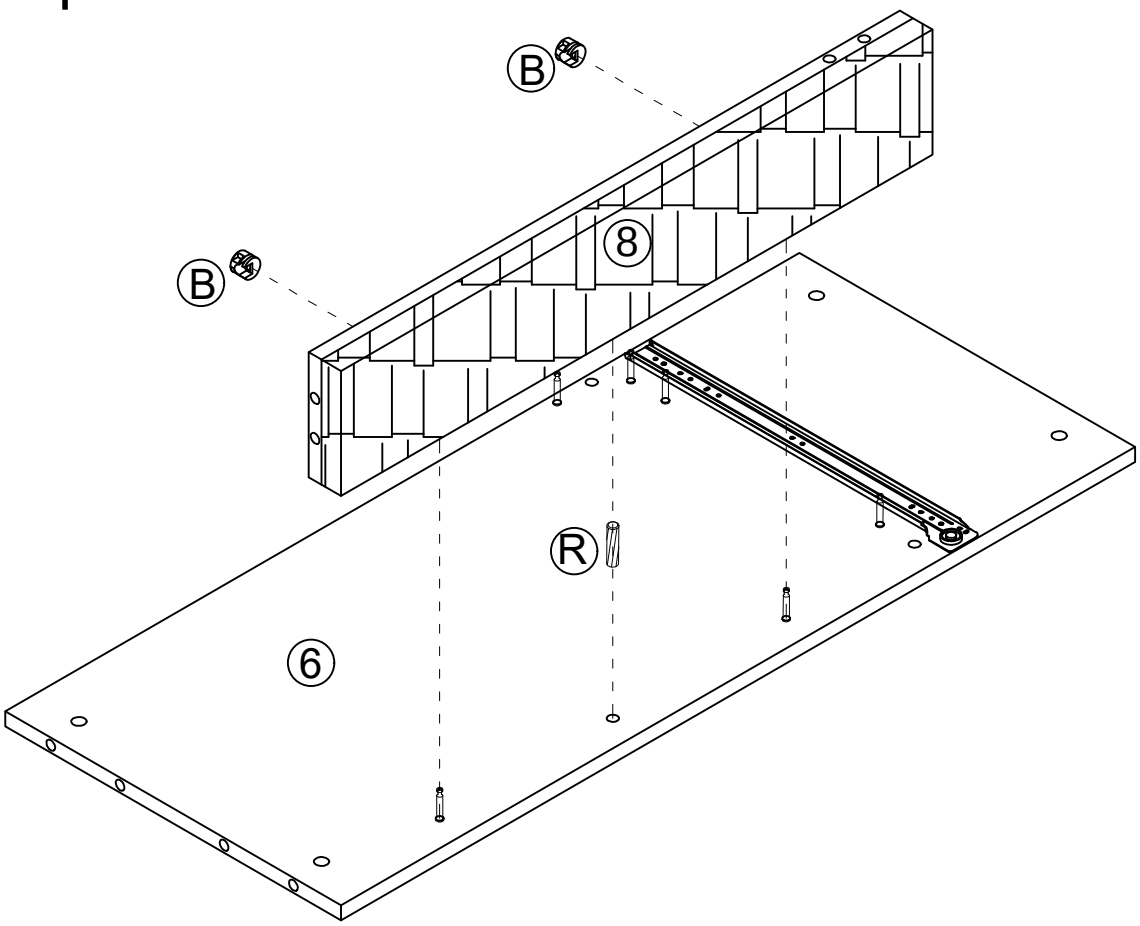

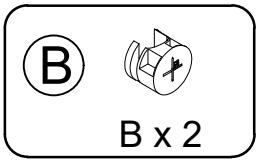

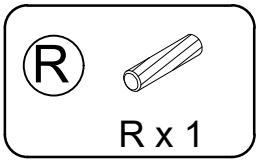

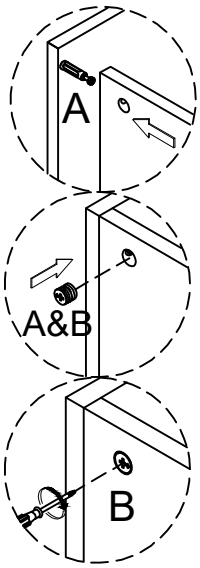

Step 7

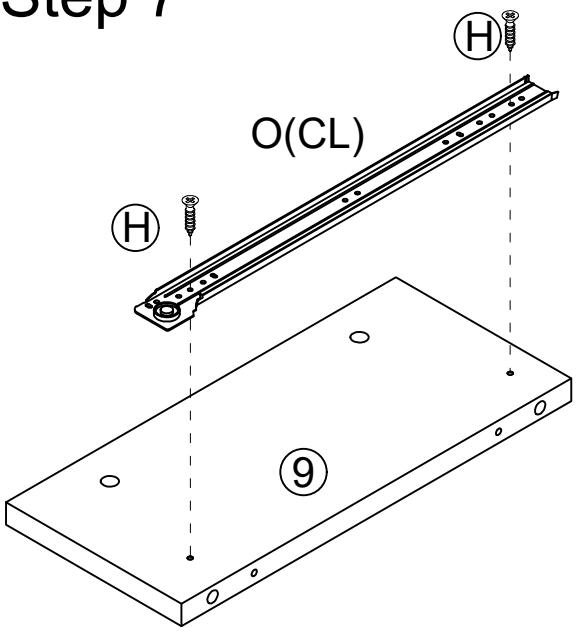

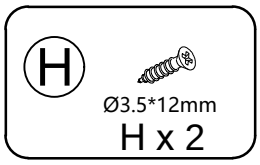

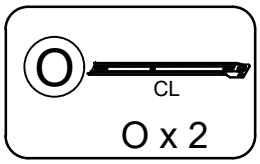

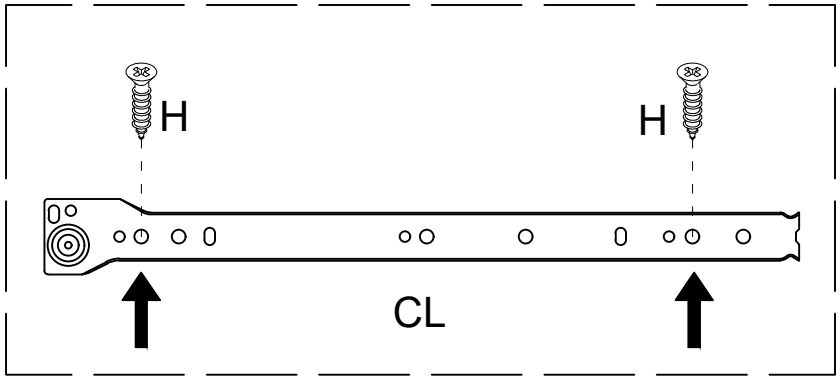

Install 1 slides on the right side of board 9.

Step 8

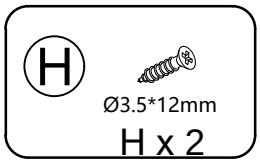

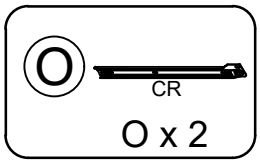

Install 1 slides on the left side of board 9.

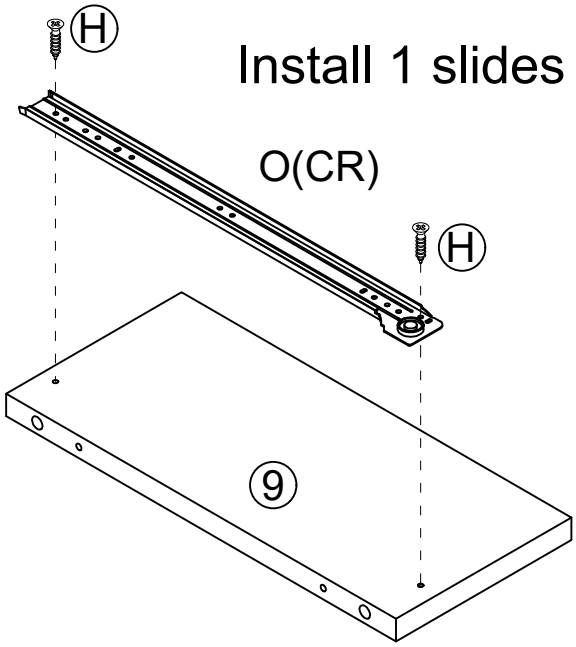

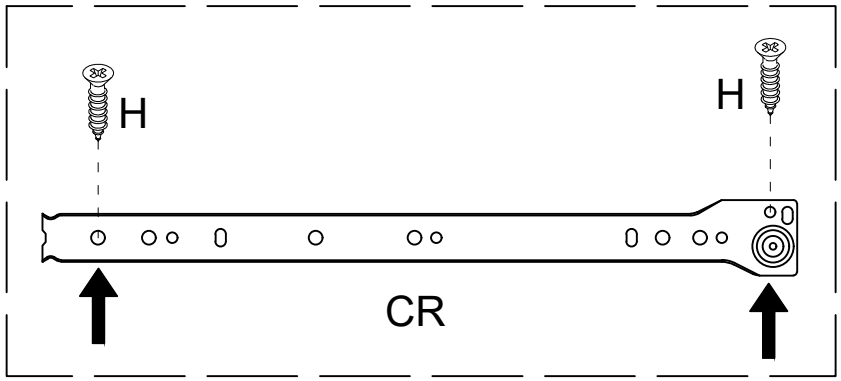

NOTICE: To ensure the stability of the structure, please pay attention to the hole position when locking screws. CL slide should lock on the second hole position near the pulley, CR slide should lock on the second hole position above the pulley.

Step 9

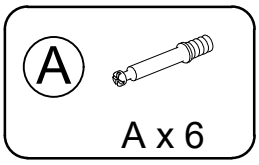

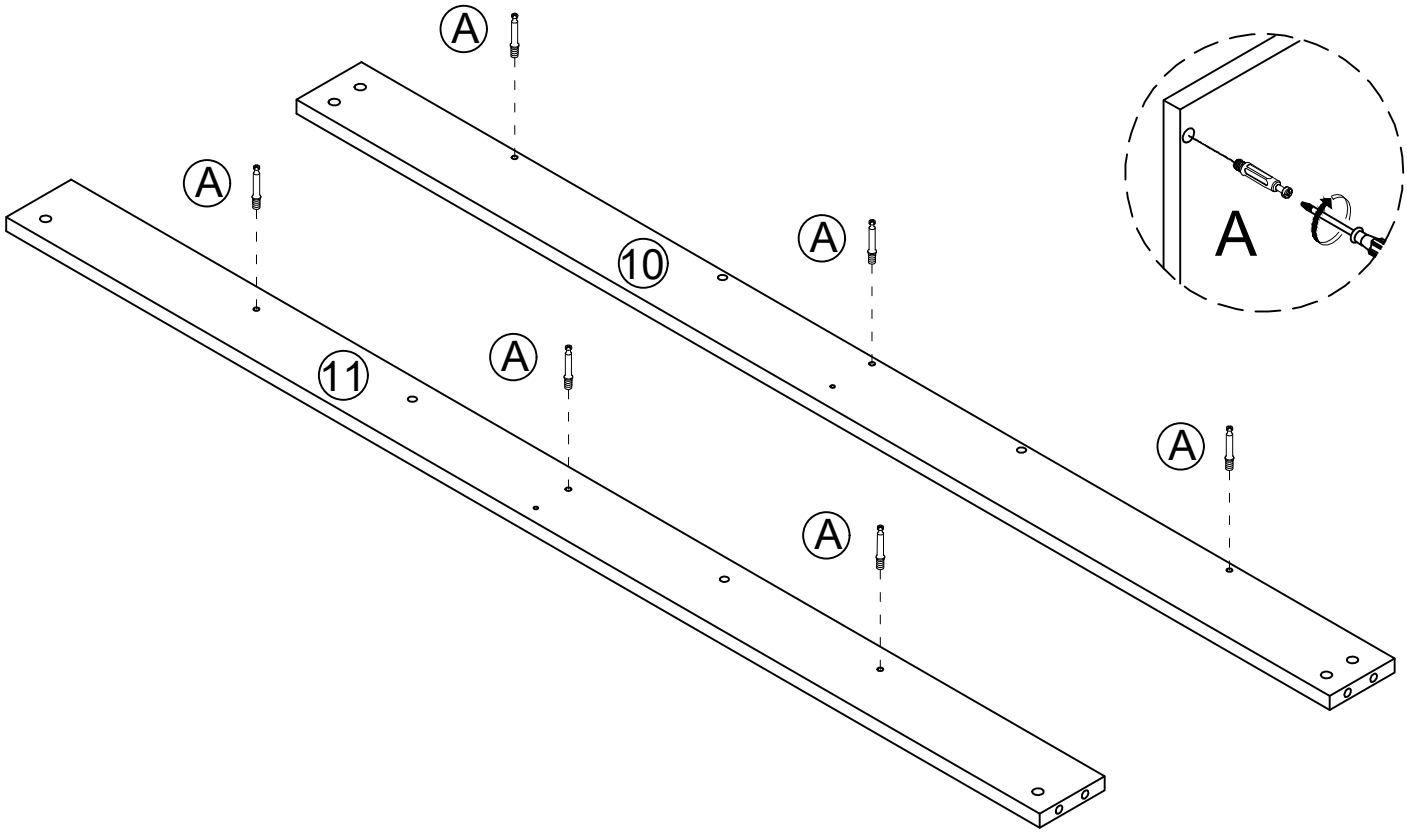

Step 10

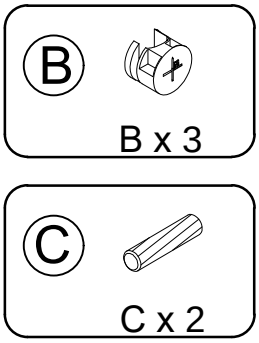

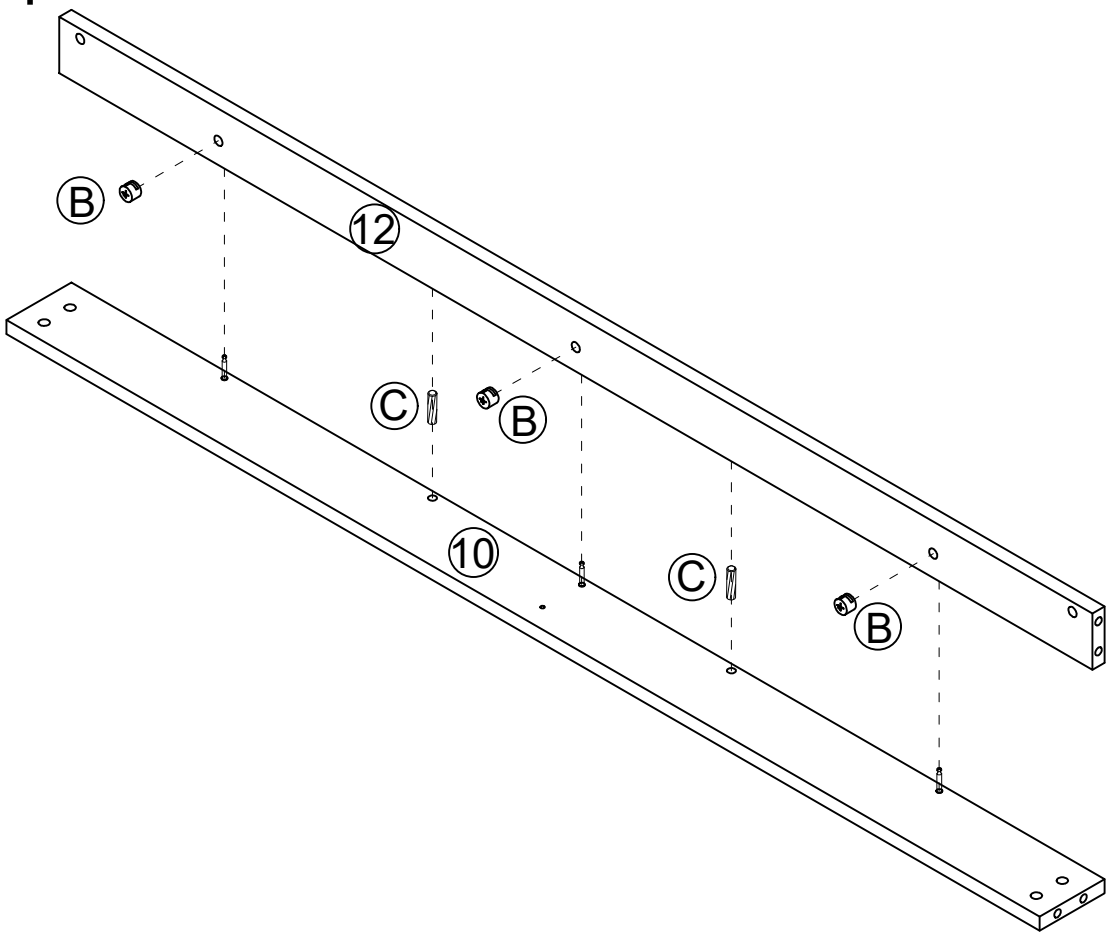

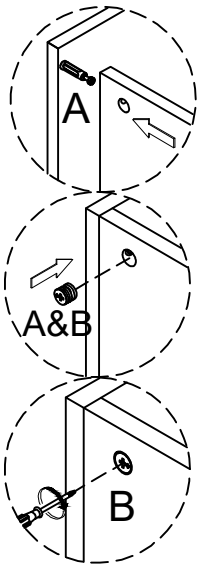

Step 11

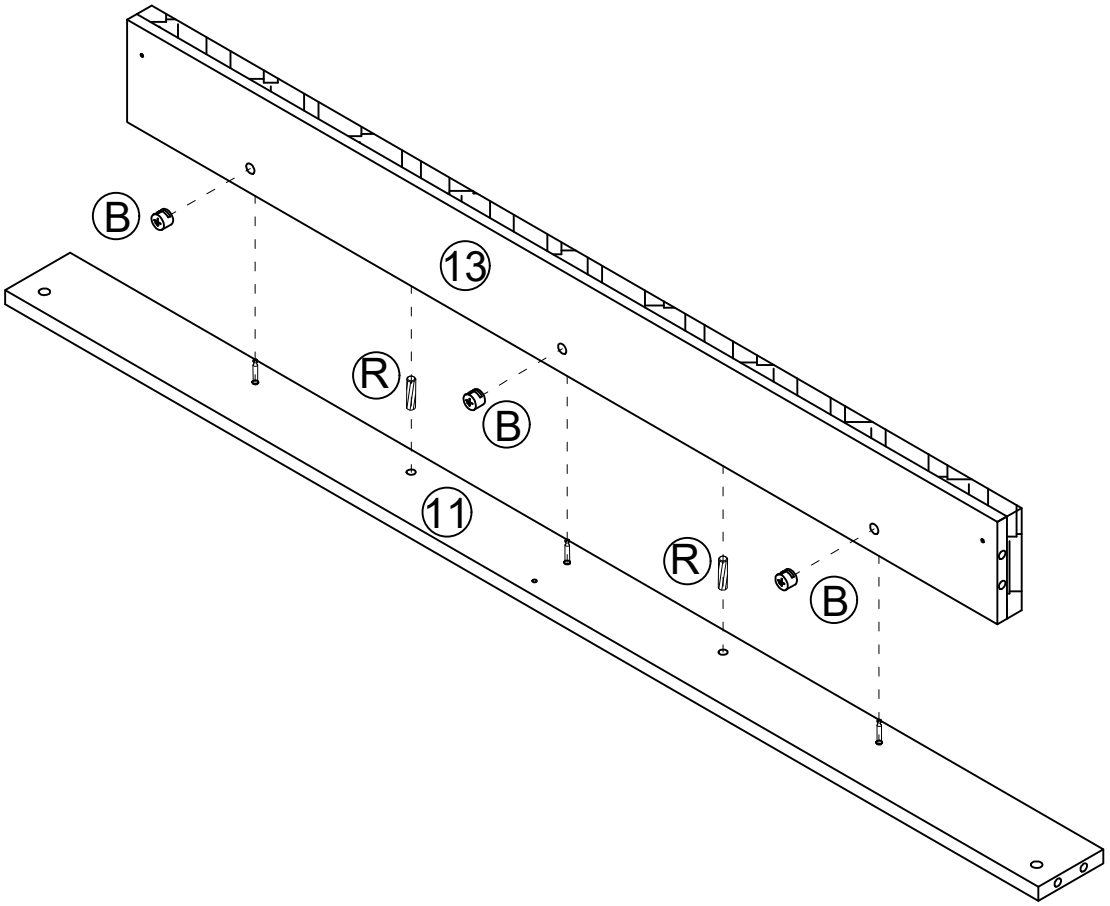

B

B x 3

R

R x 2

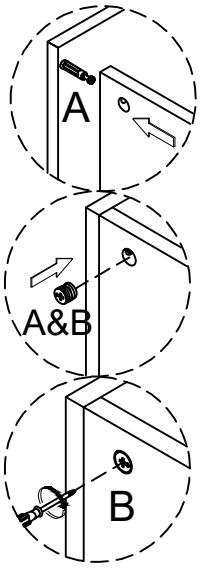

Step 12

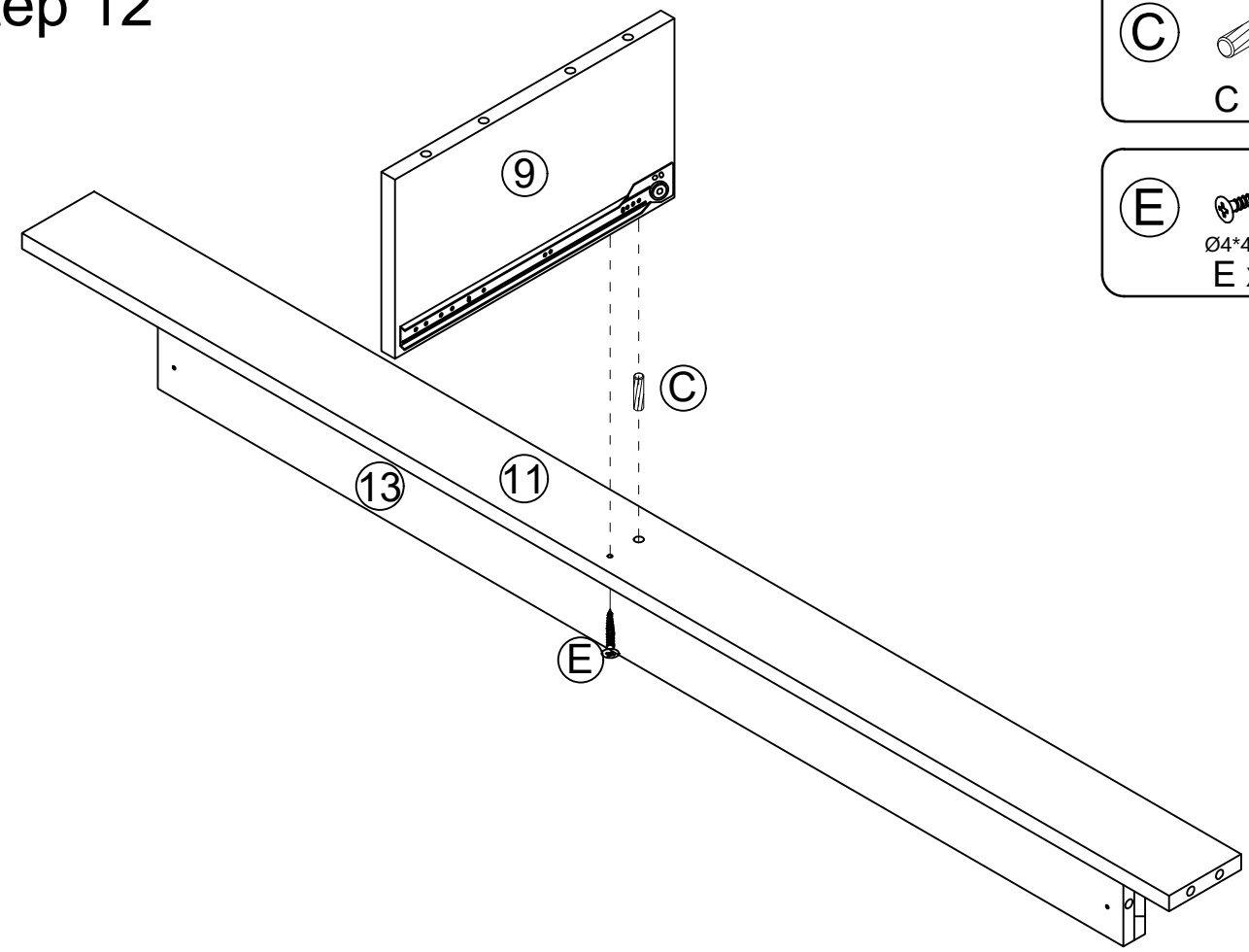

C

C x 1

E

Ø4*40mm

E x 1

Step 13

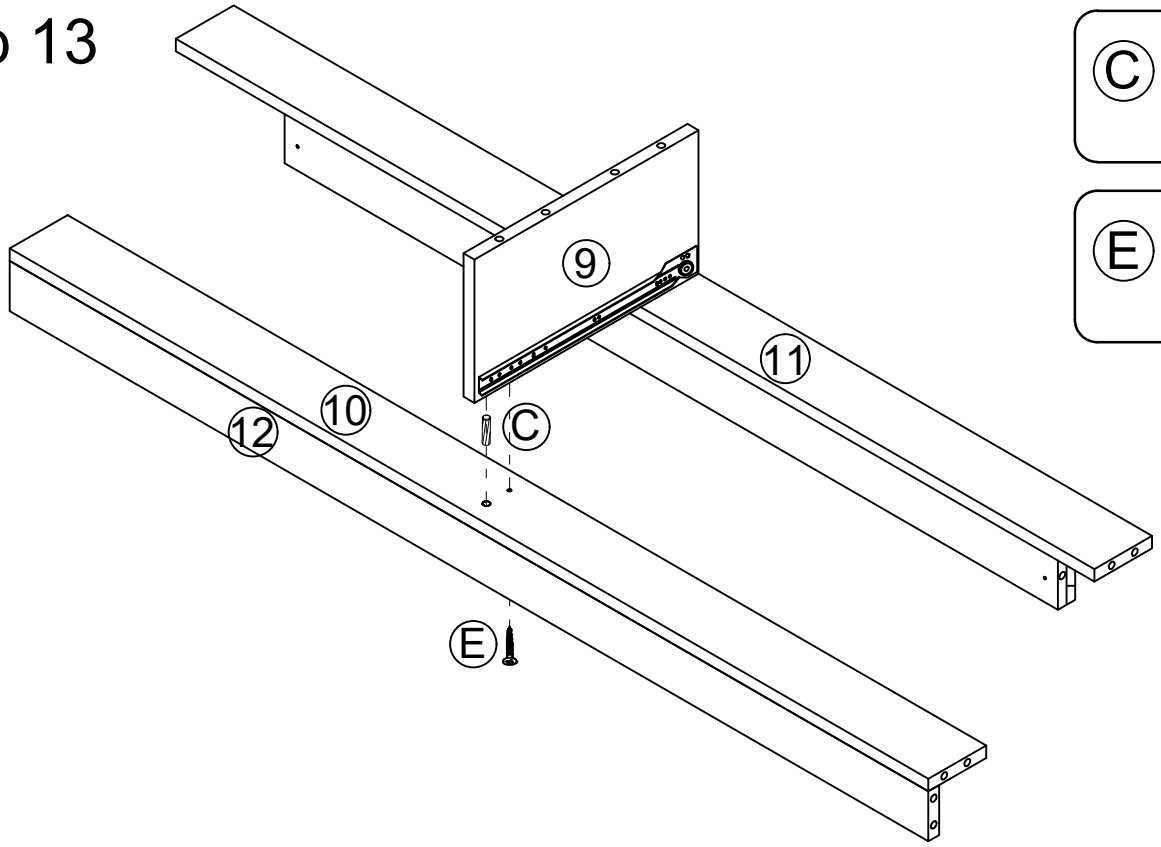

C
C x 1

E
Ø4*40mm
E x 1

Step 14

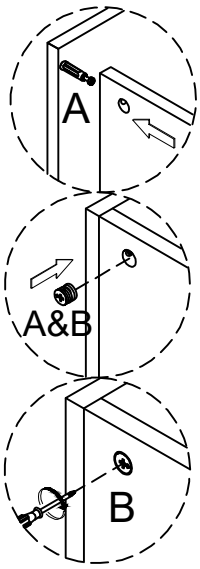

B
B x 4

C
C x 2

R
R x 2

Step 15

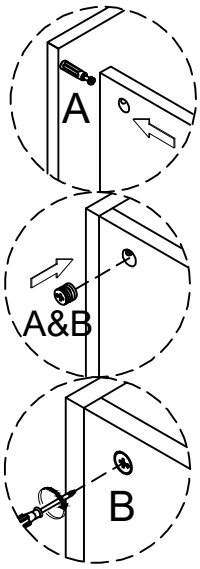

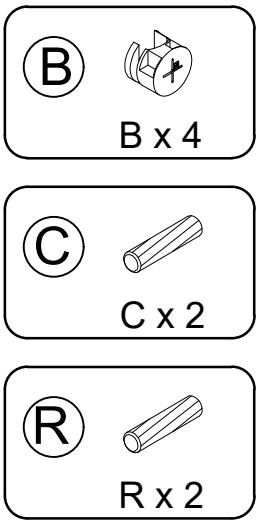

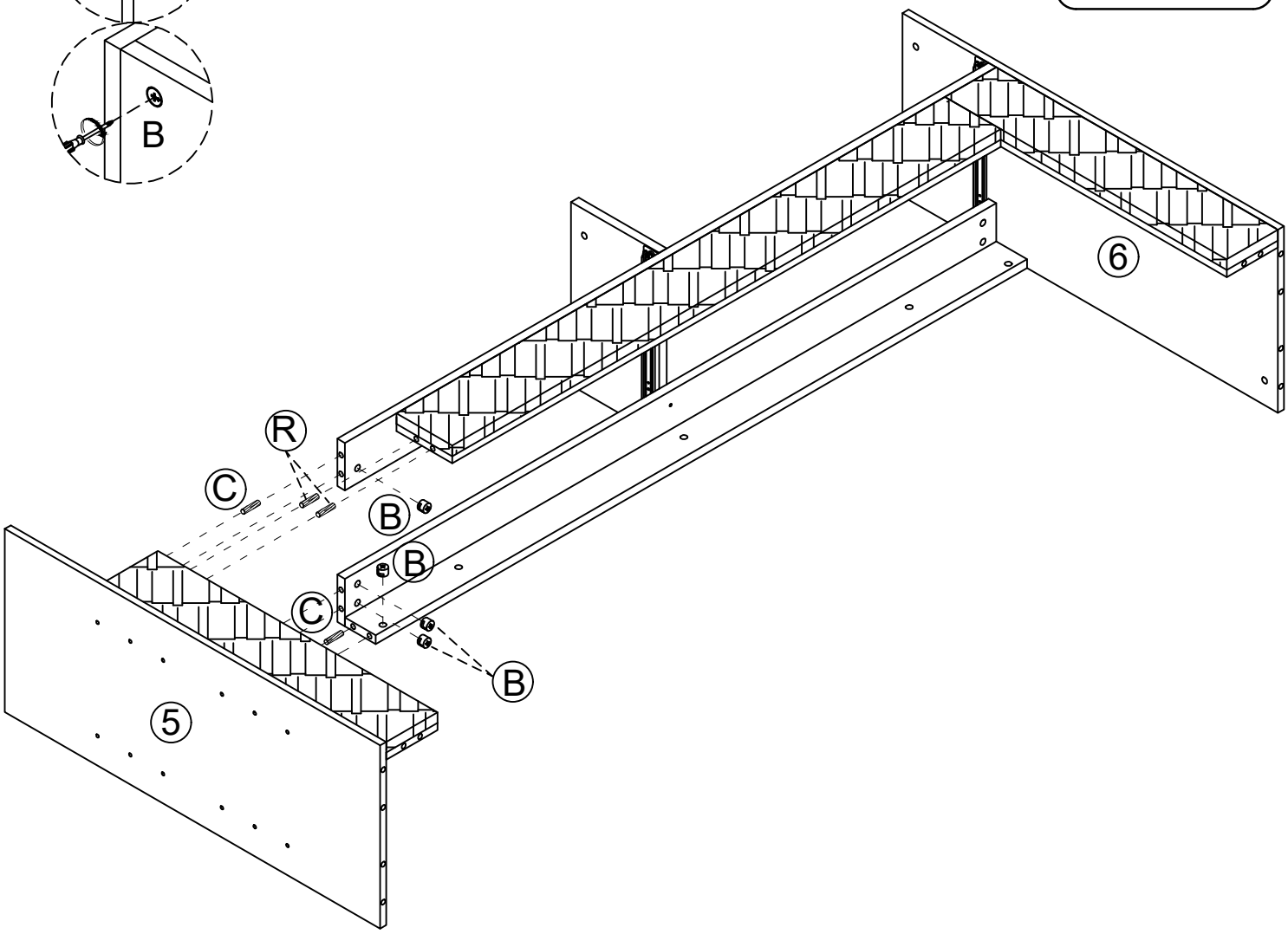

Step 16

Ⓕ Ø3.5*12mm
F x 4

Ⓖ G x 2

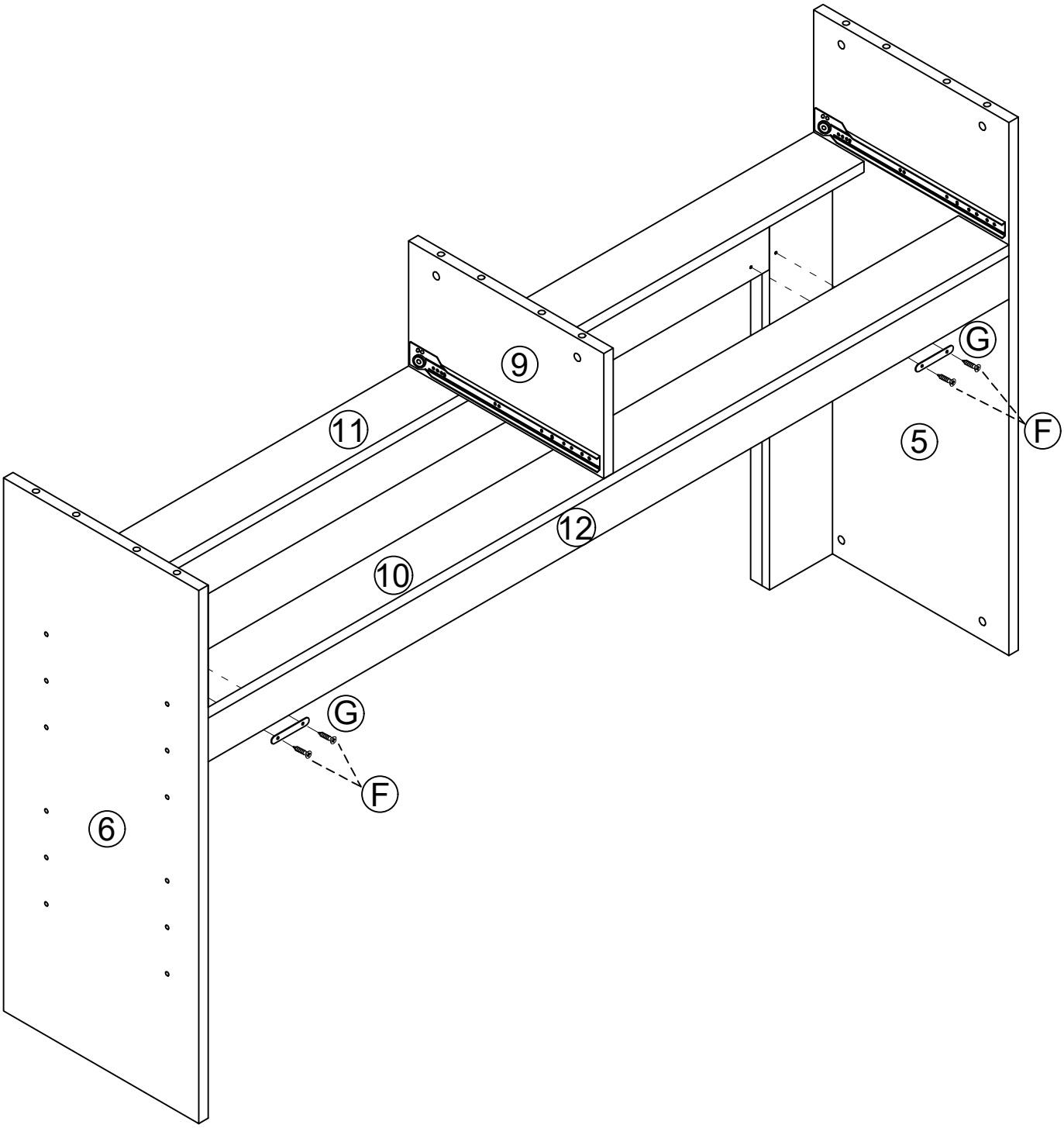

Step 17

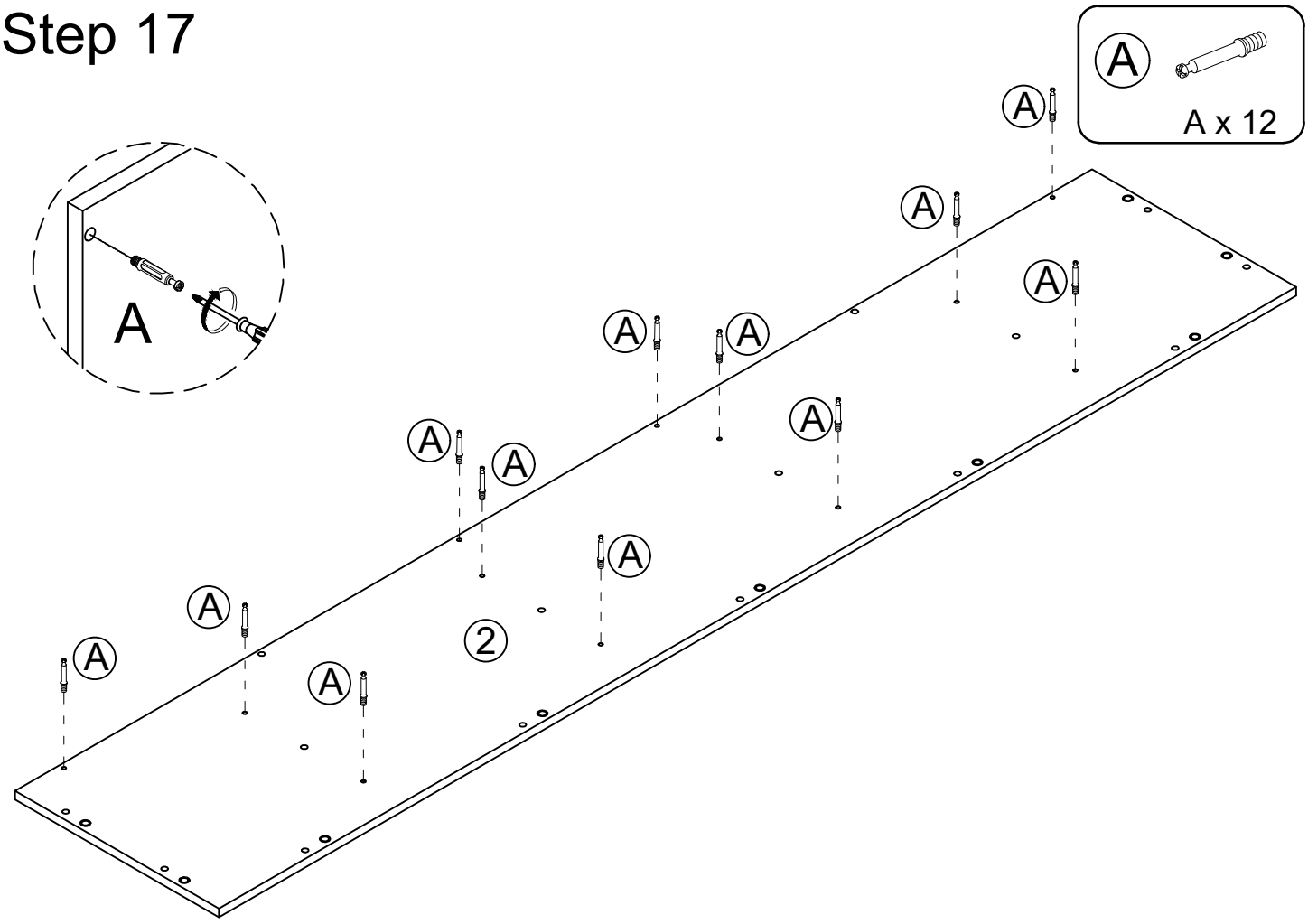

Step 18

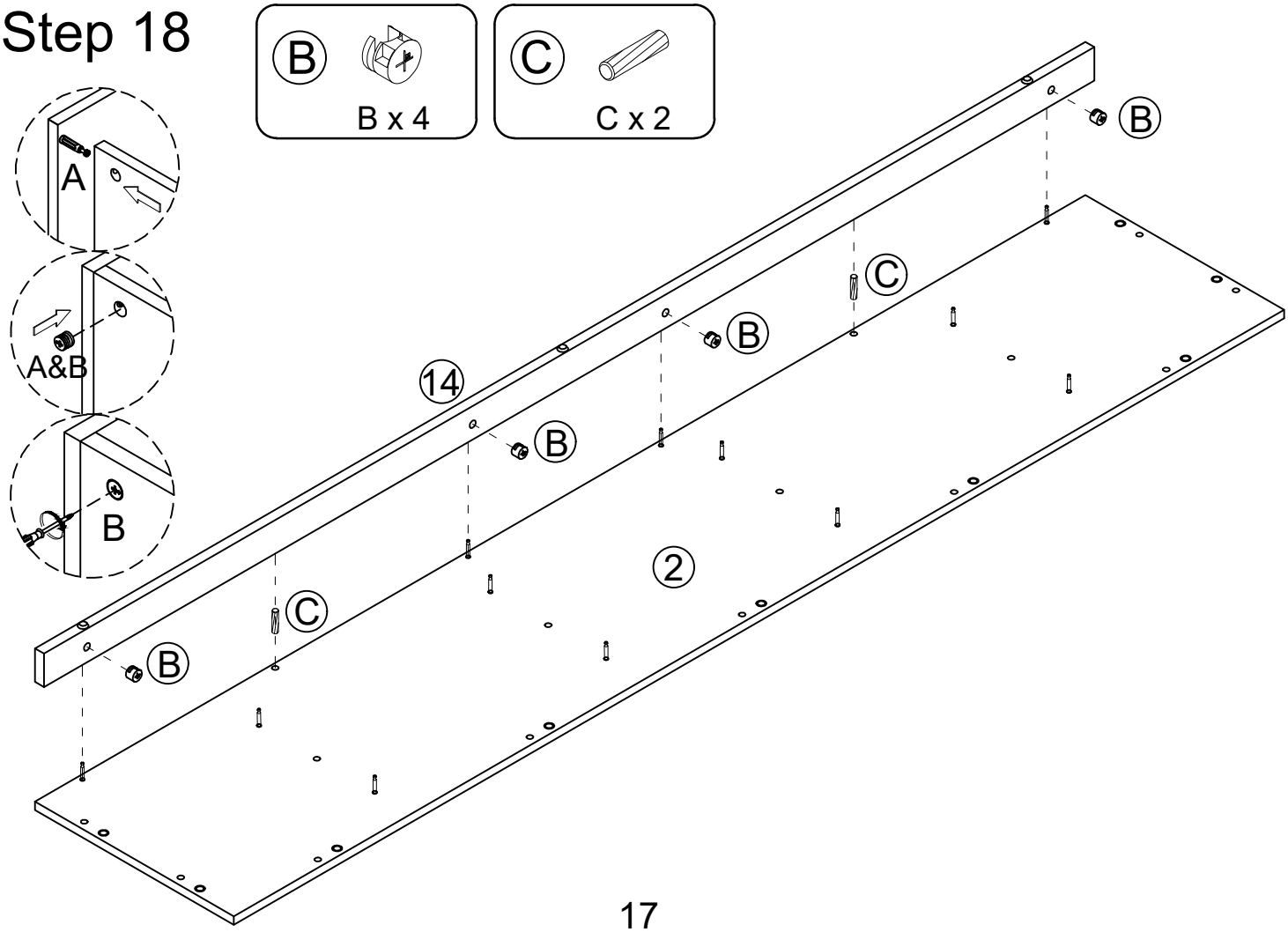

Step 19

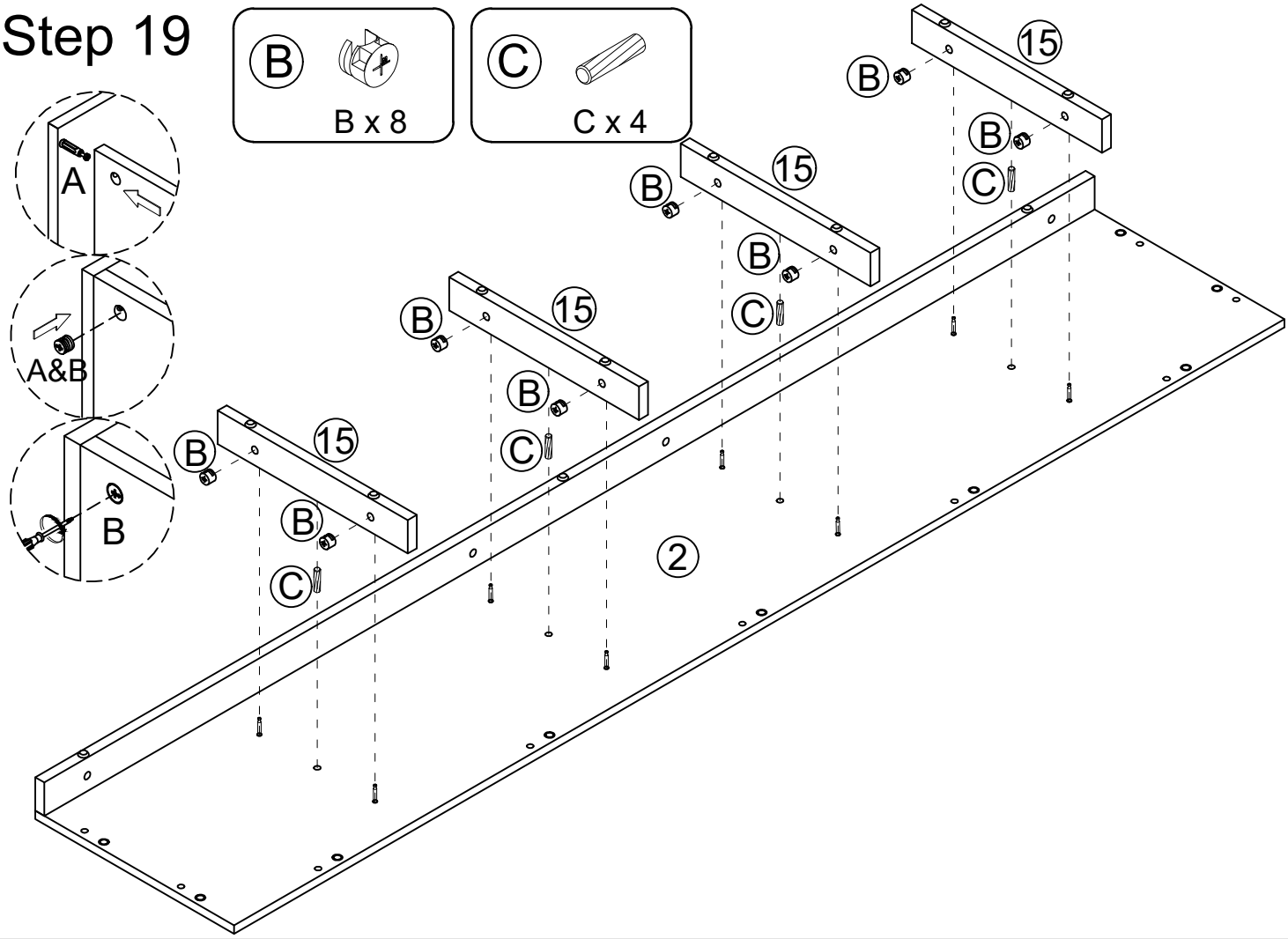

Step 20

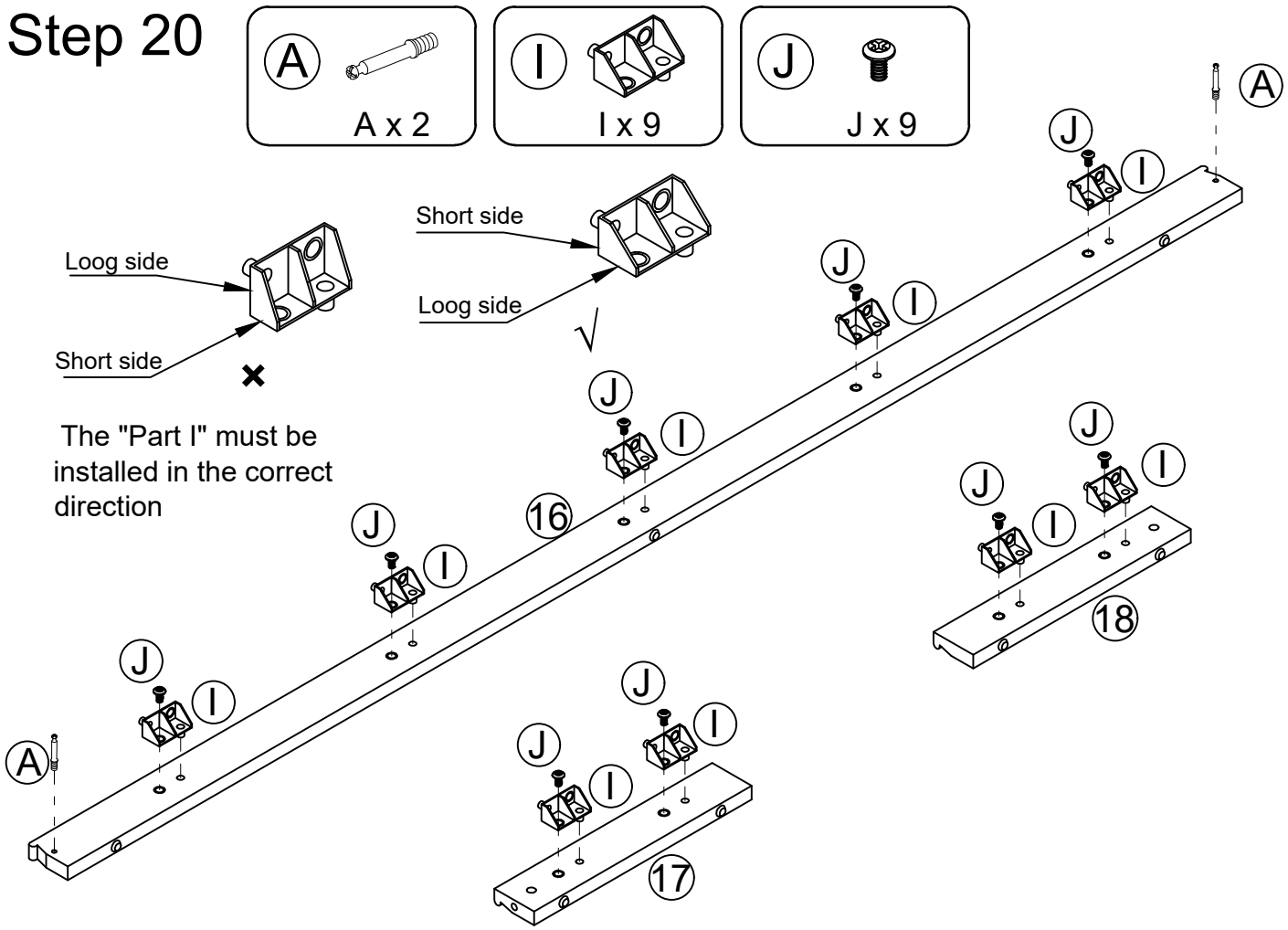

Step 21



Step 22

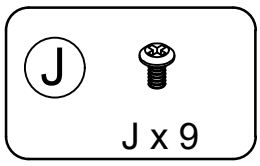

Step 23

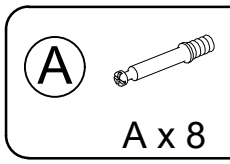

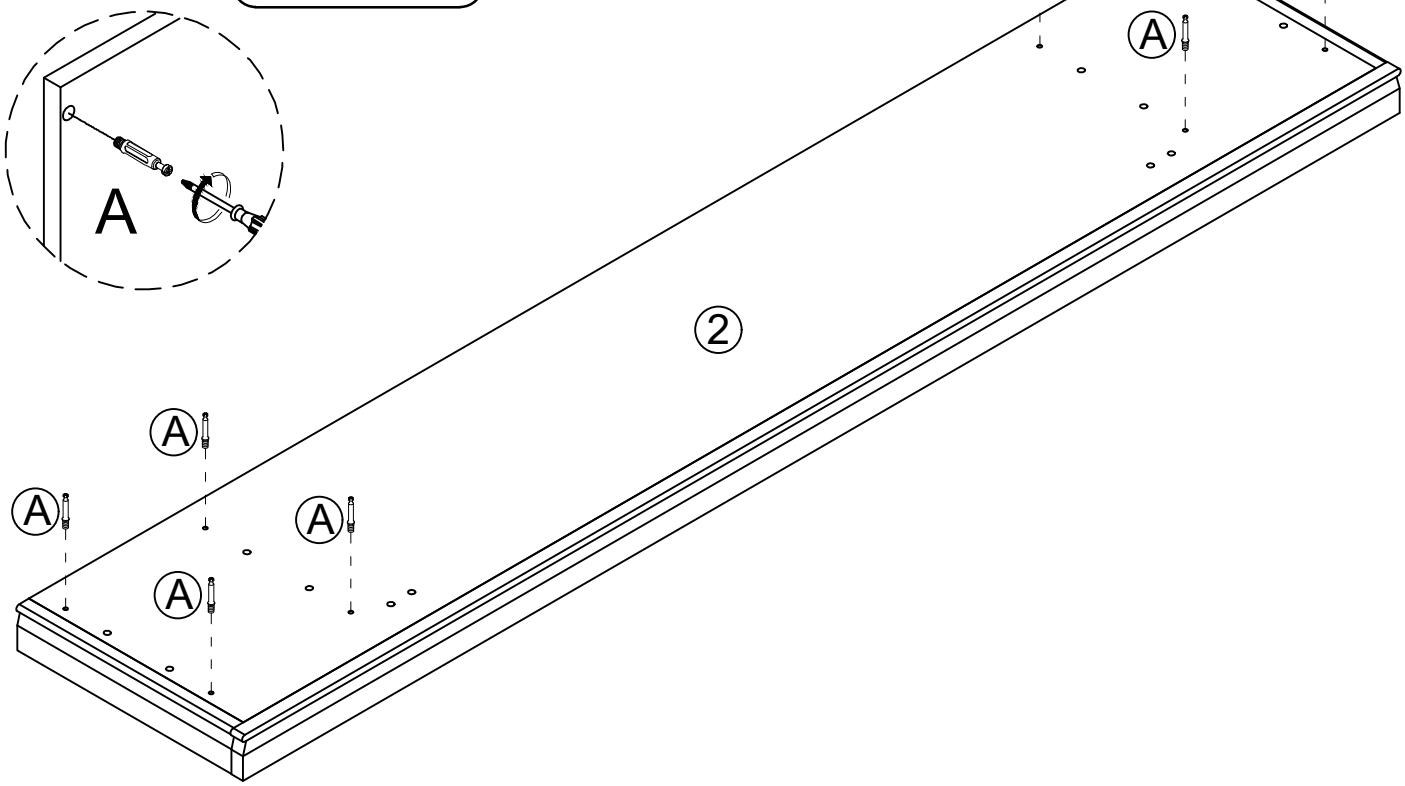

Step 24

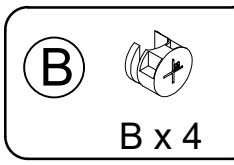

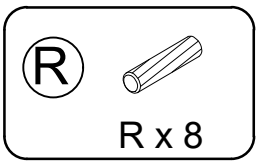

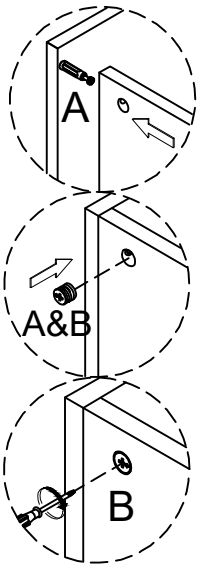

Step 25

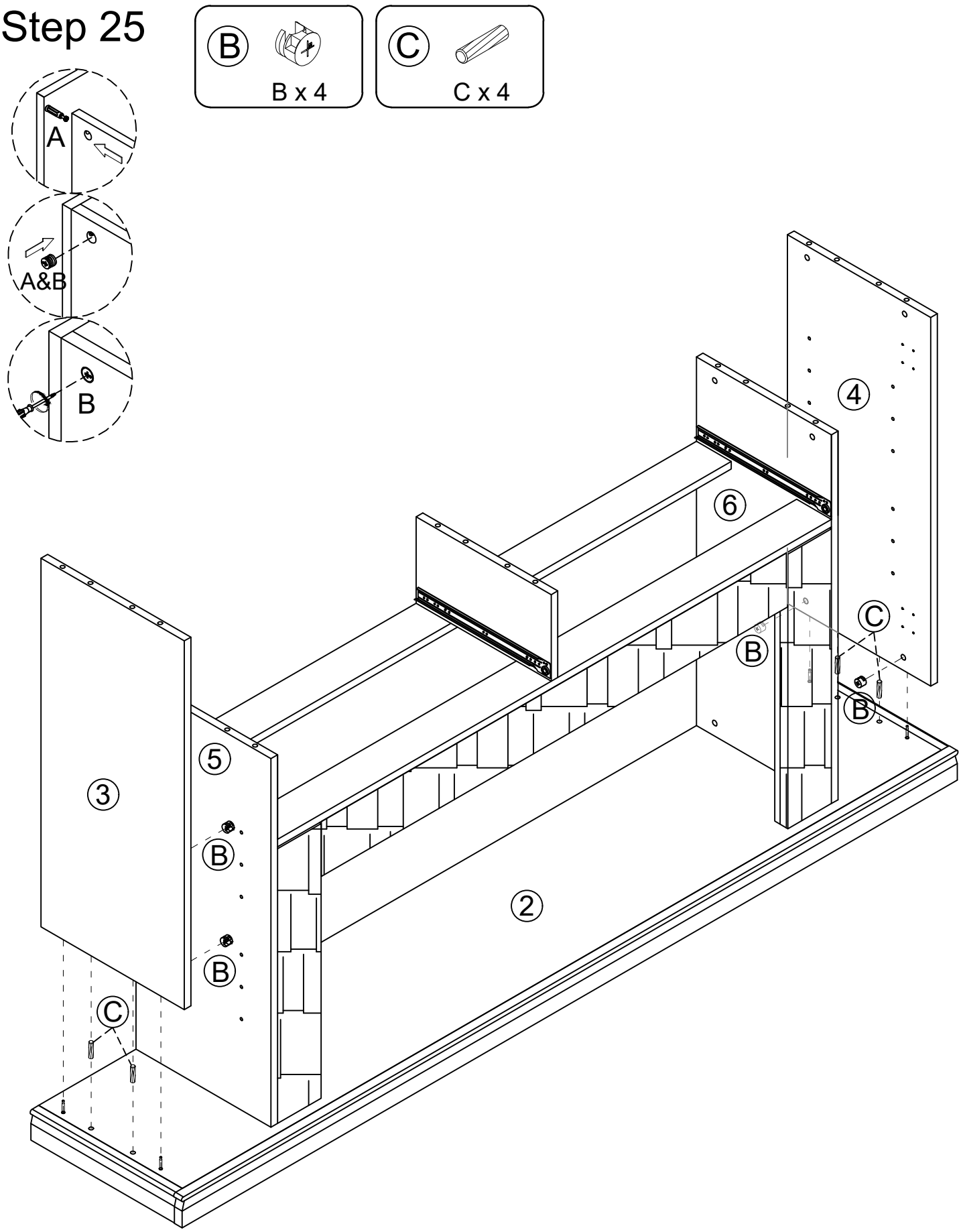

Step 26

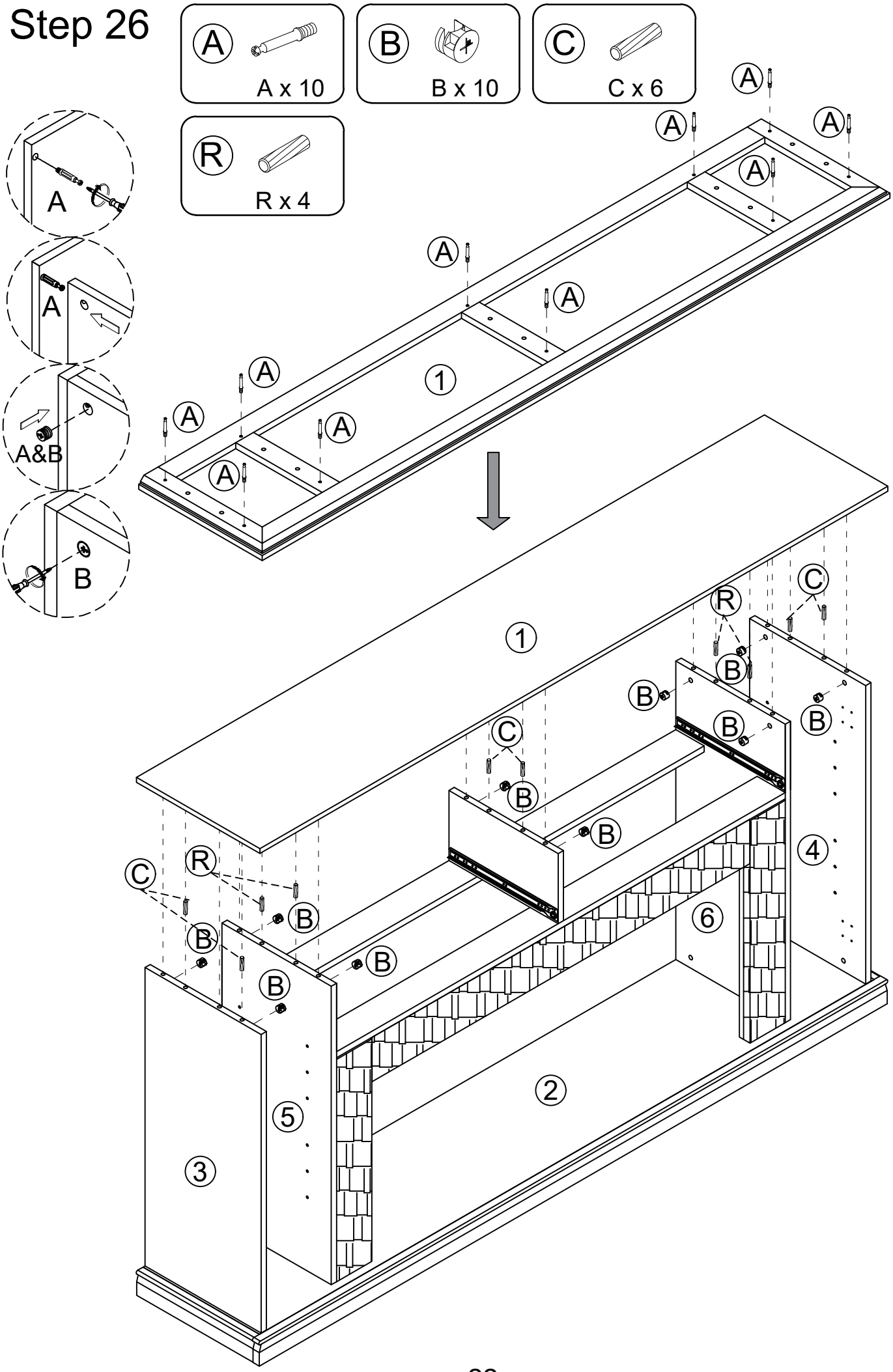

Step 27

Ⓜ Ø3.5*10mm
M x 34

P1
P1 x 2

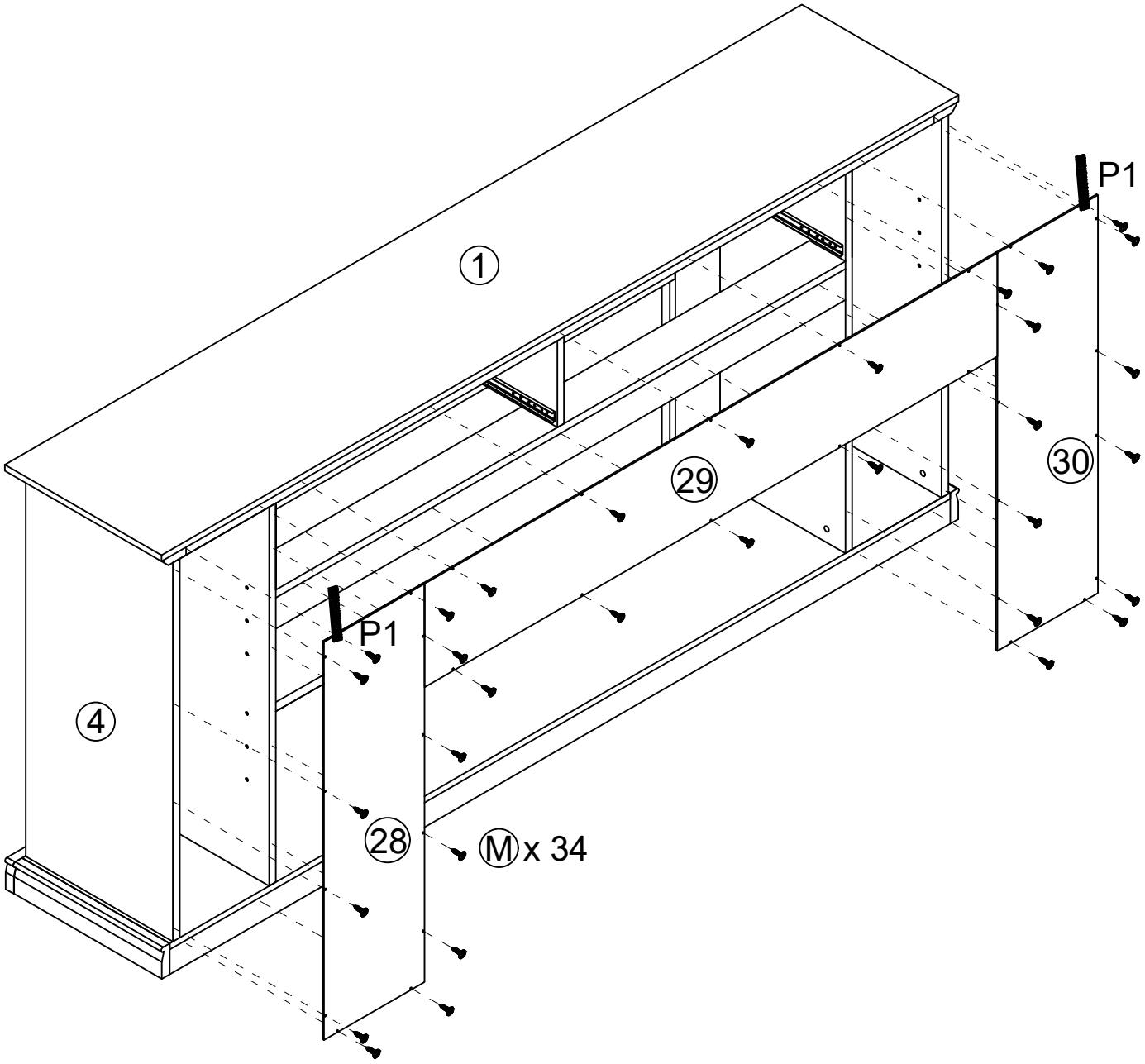

Step 28

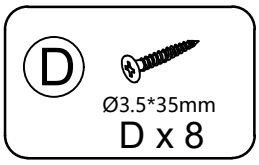

Step 29

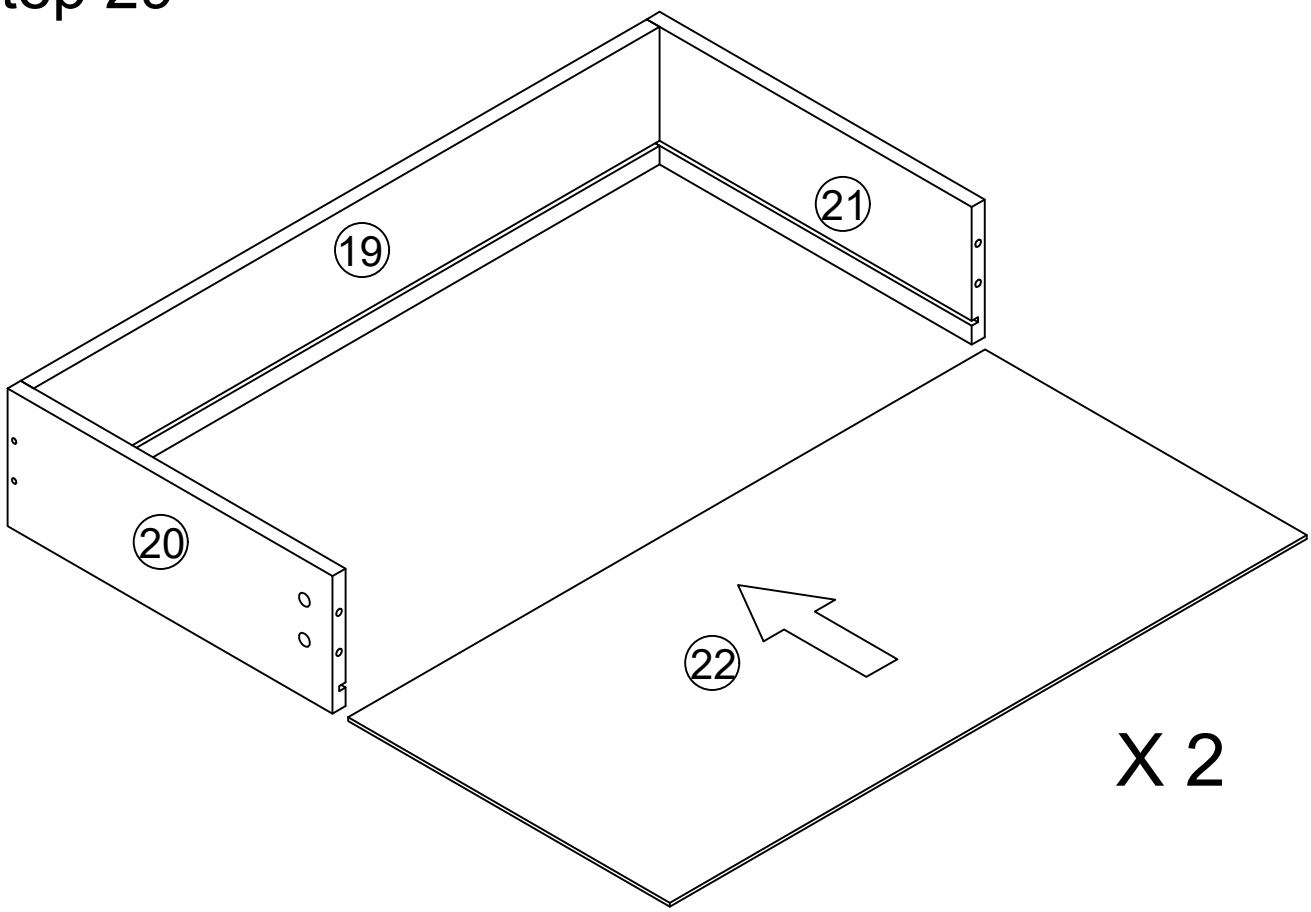

Step 30

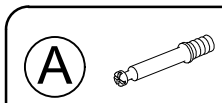

A x 4

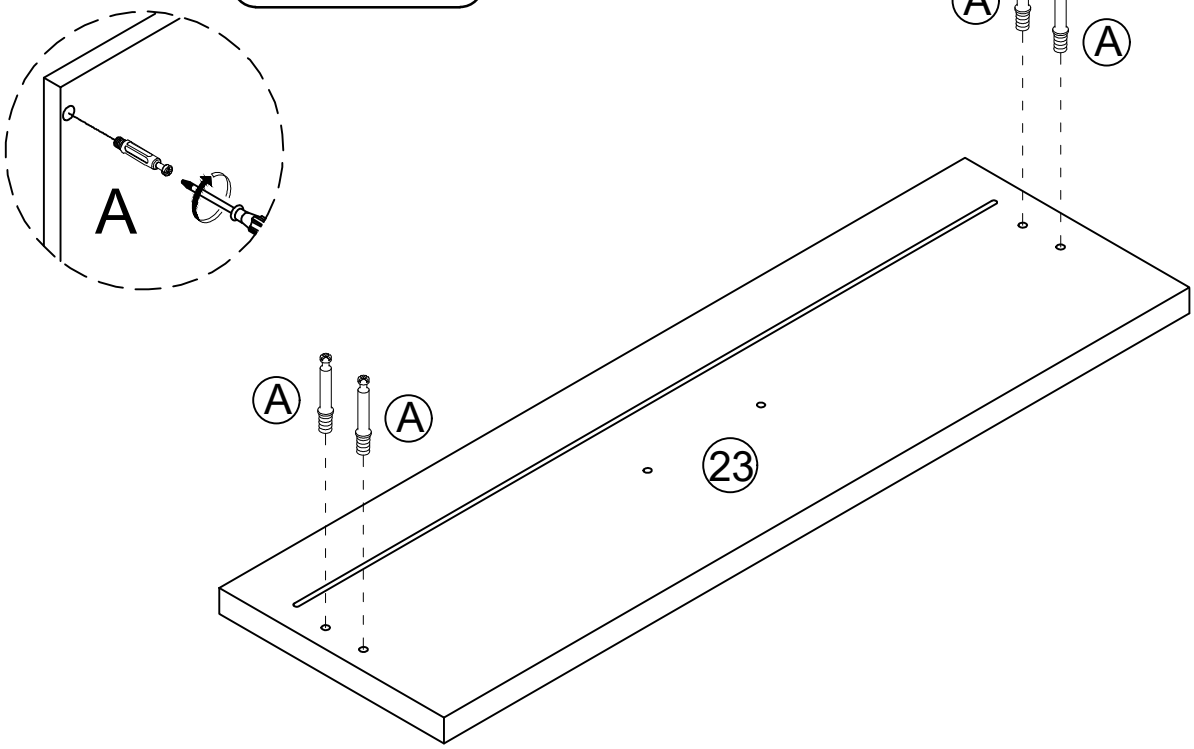

Step 31

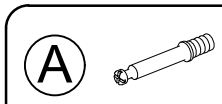

A x 4

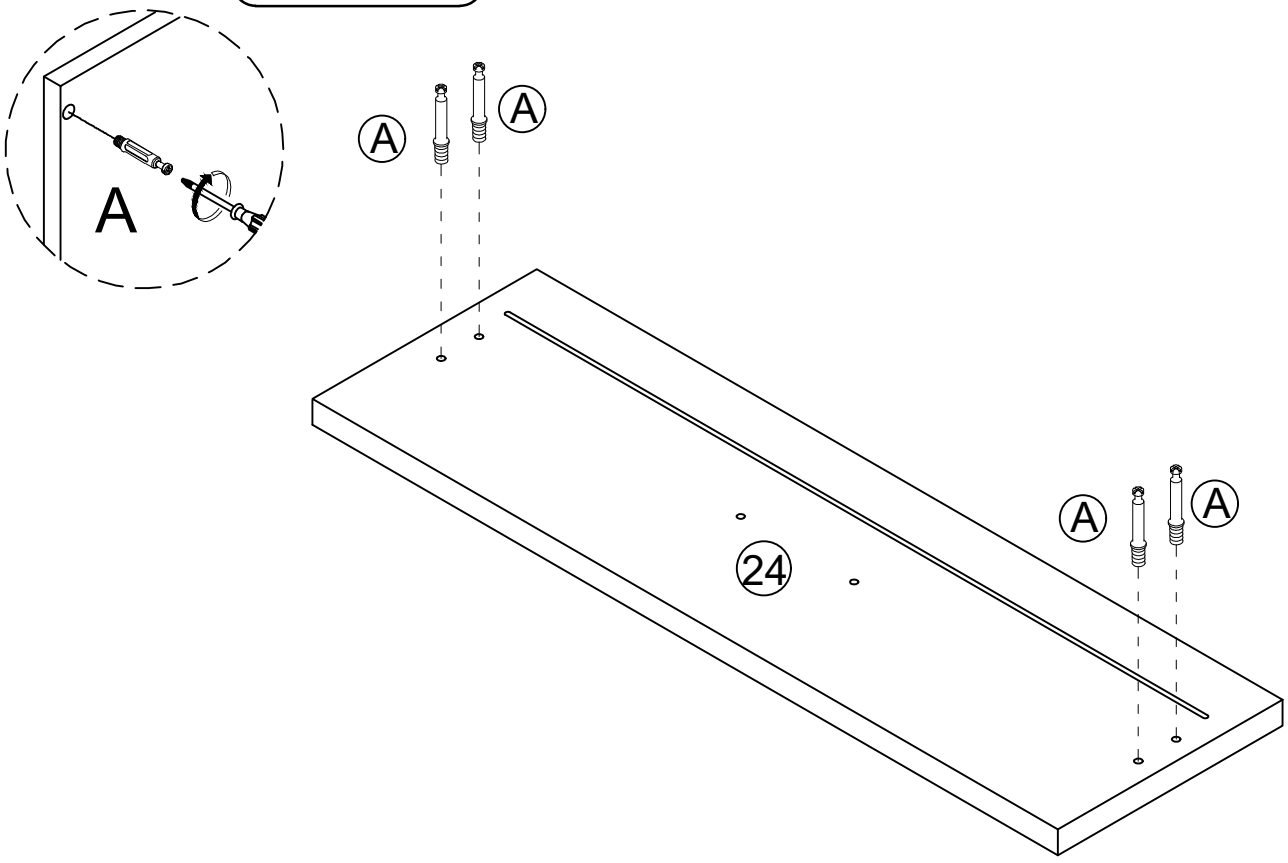

Step 32

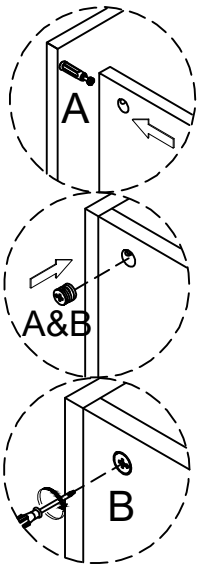

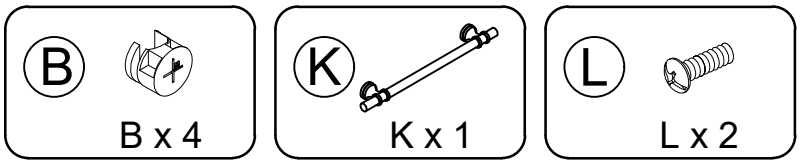

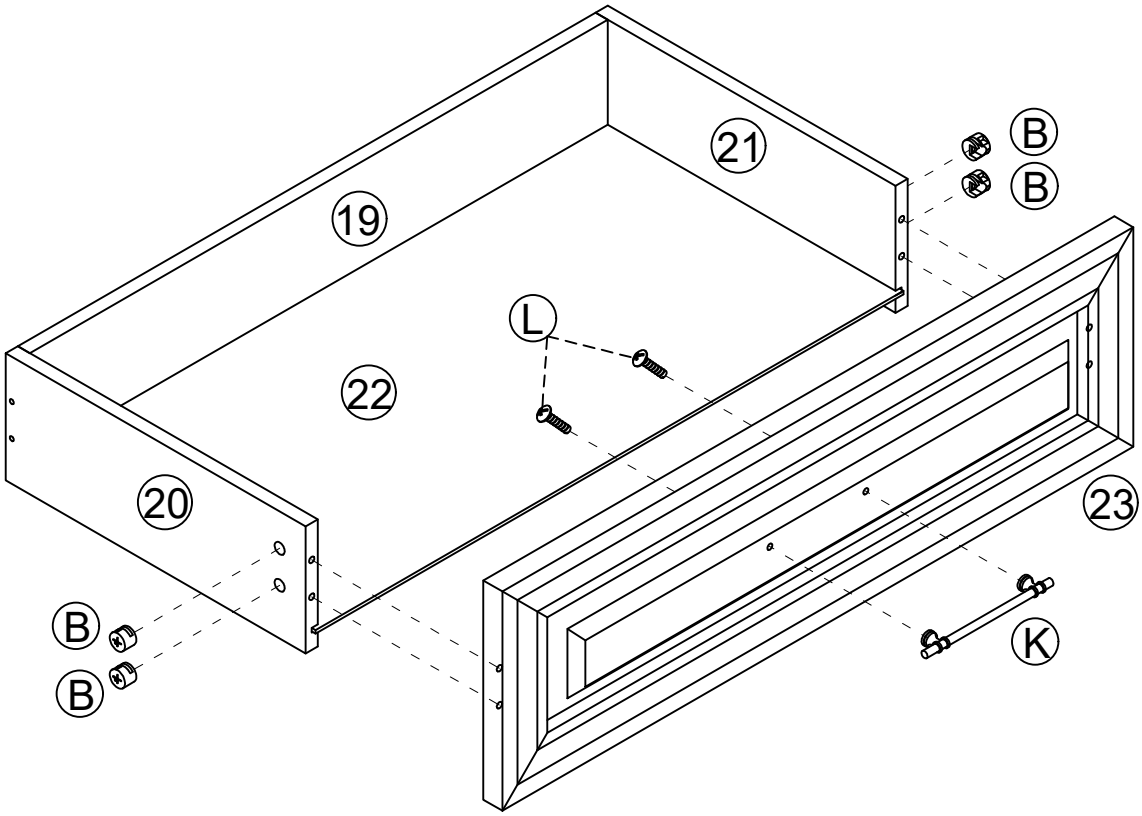

Step 33

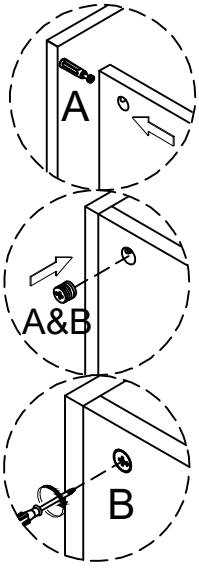

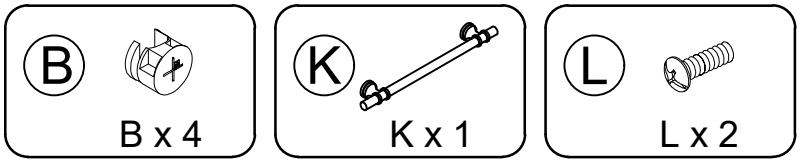

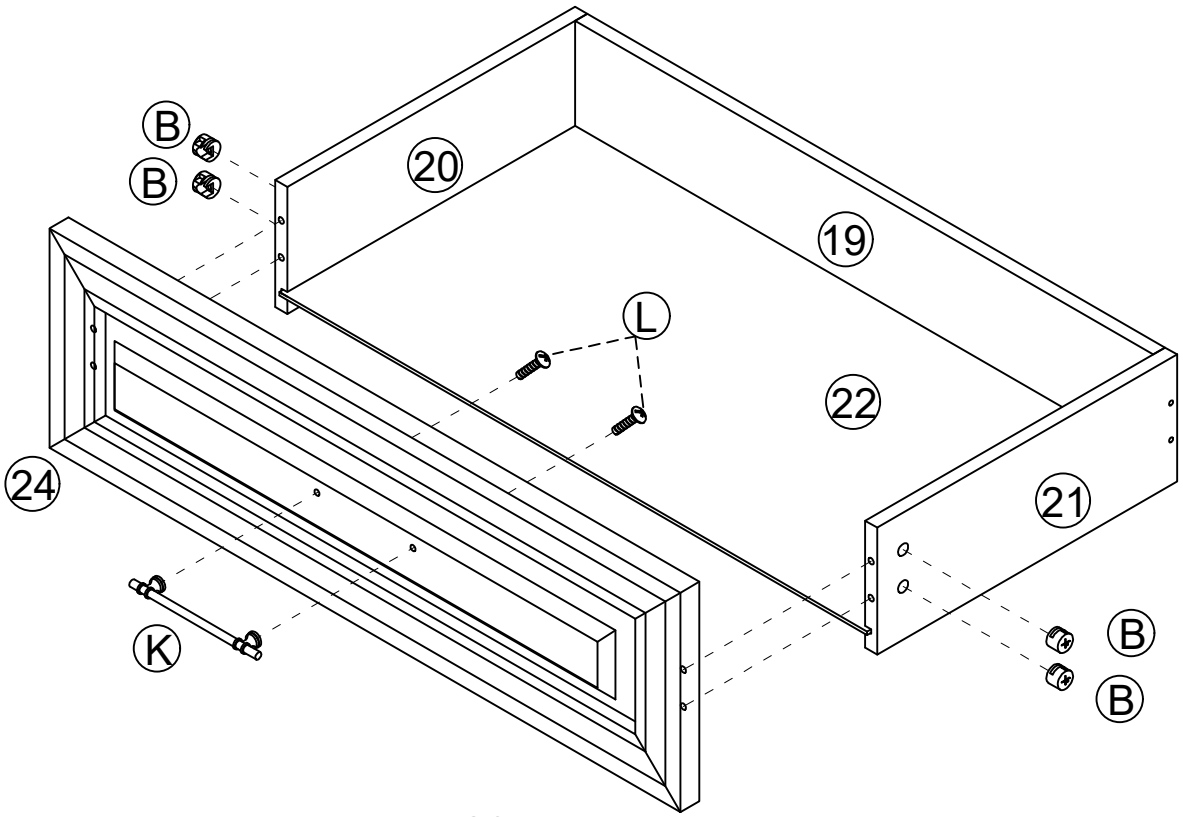

Step 34

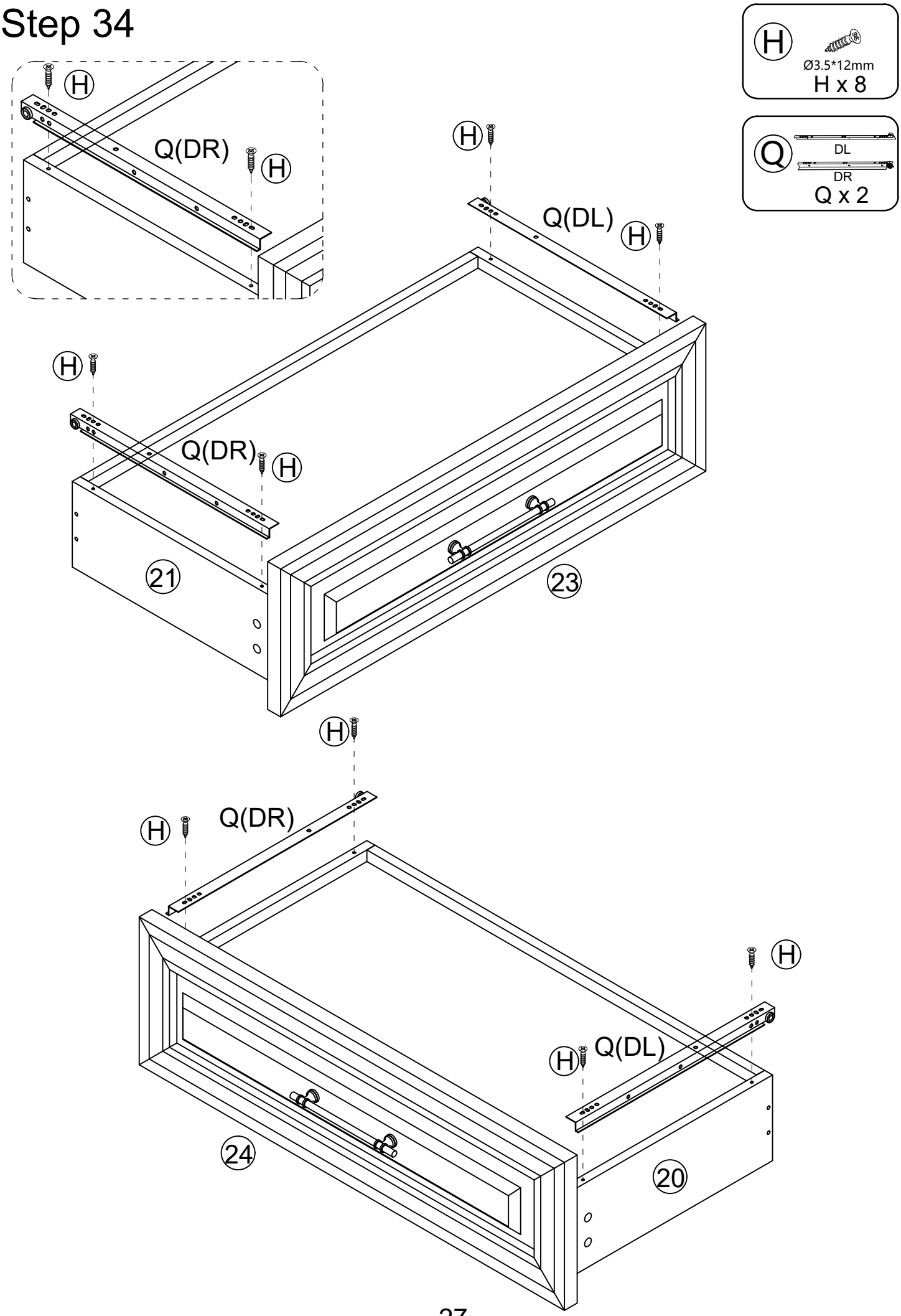
H
Ø3.5*12mm
H x 8
Q
DL
DR
Q x 2
H
Q(DR)
H
H
Q(DL)
H
H
Q(DR)
H
21
23
H
H
Q(DR)
H
Q(DL)
24
20

Step 35

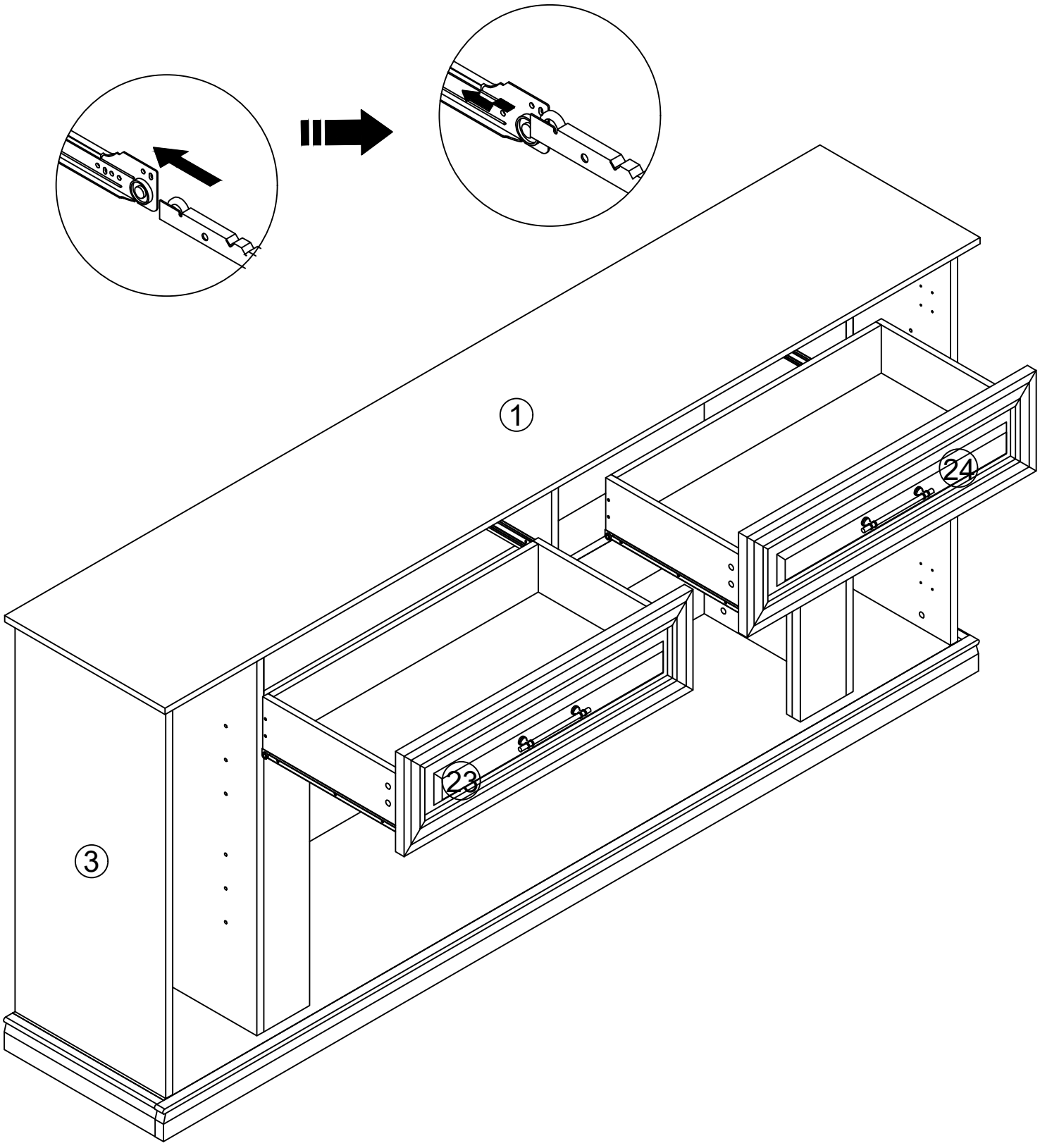

Step 36

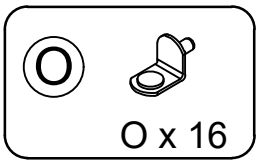

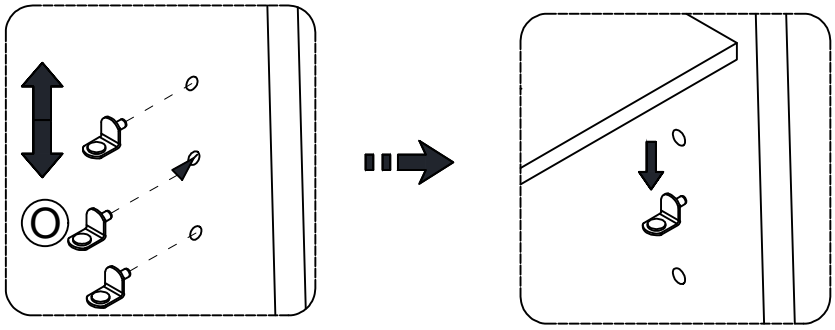

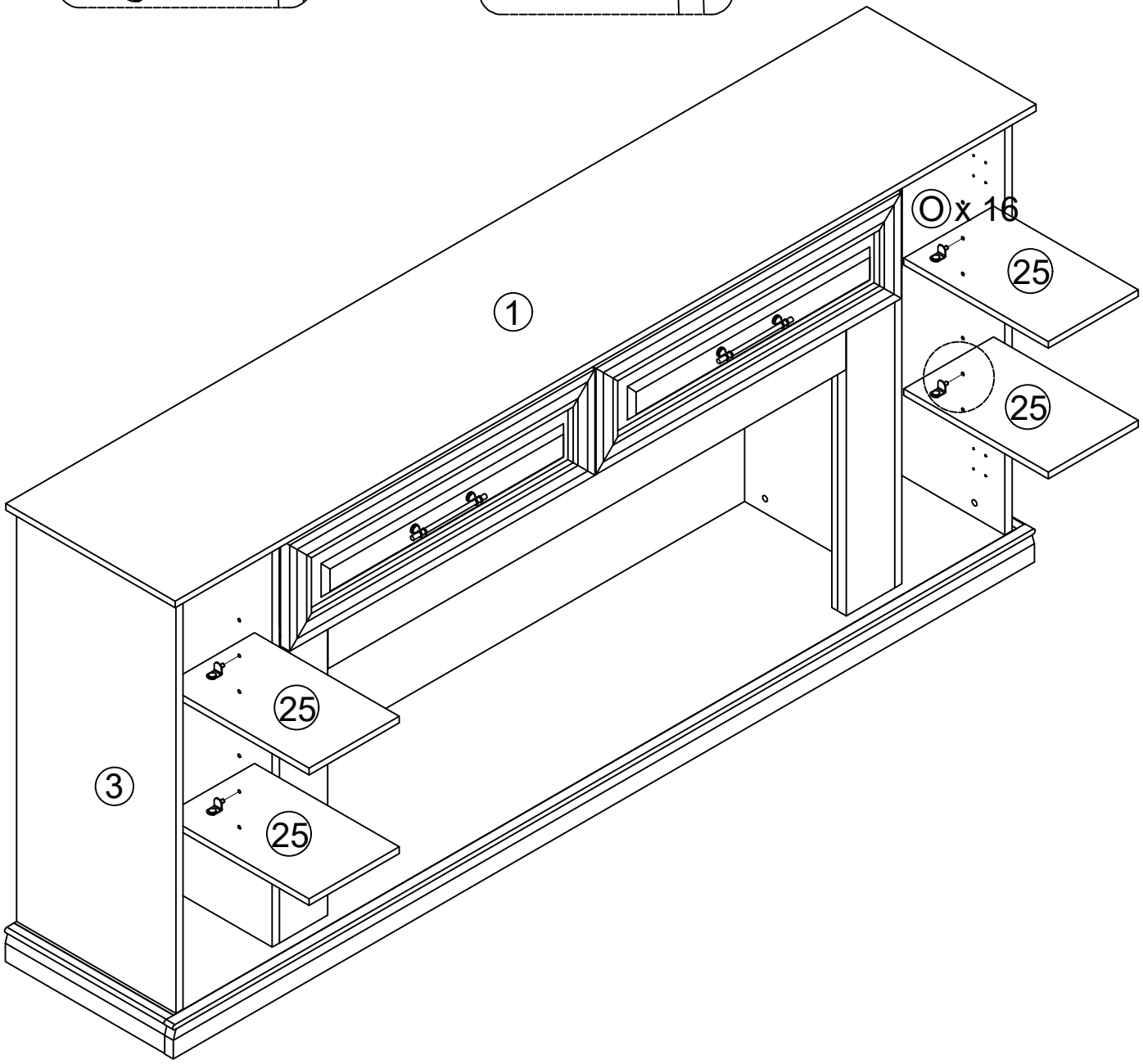

Step 37

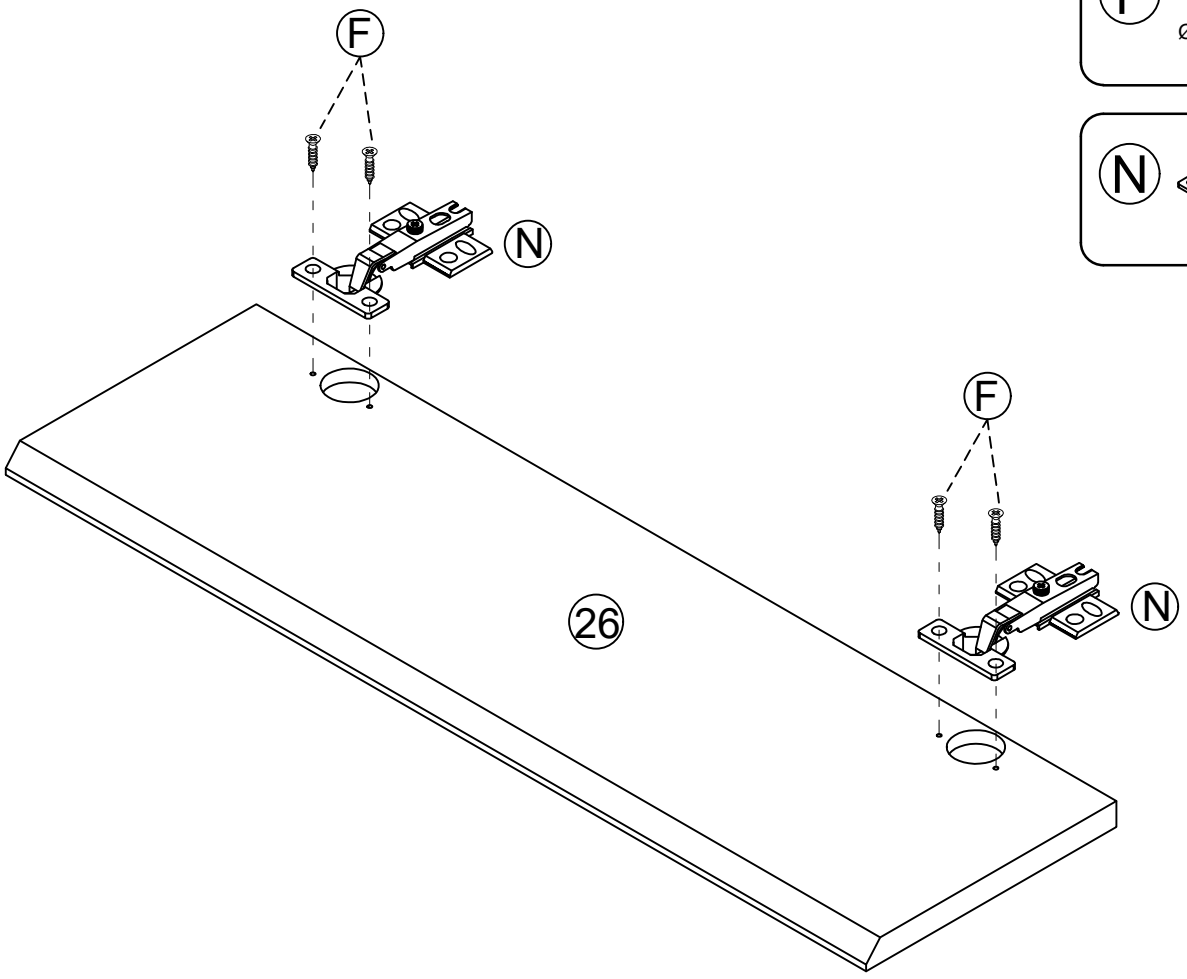

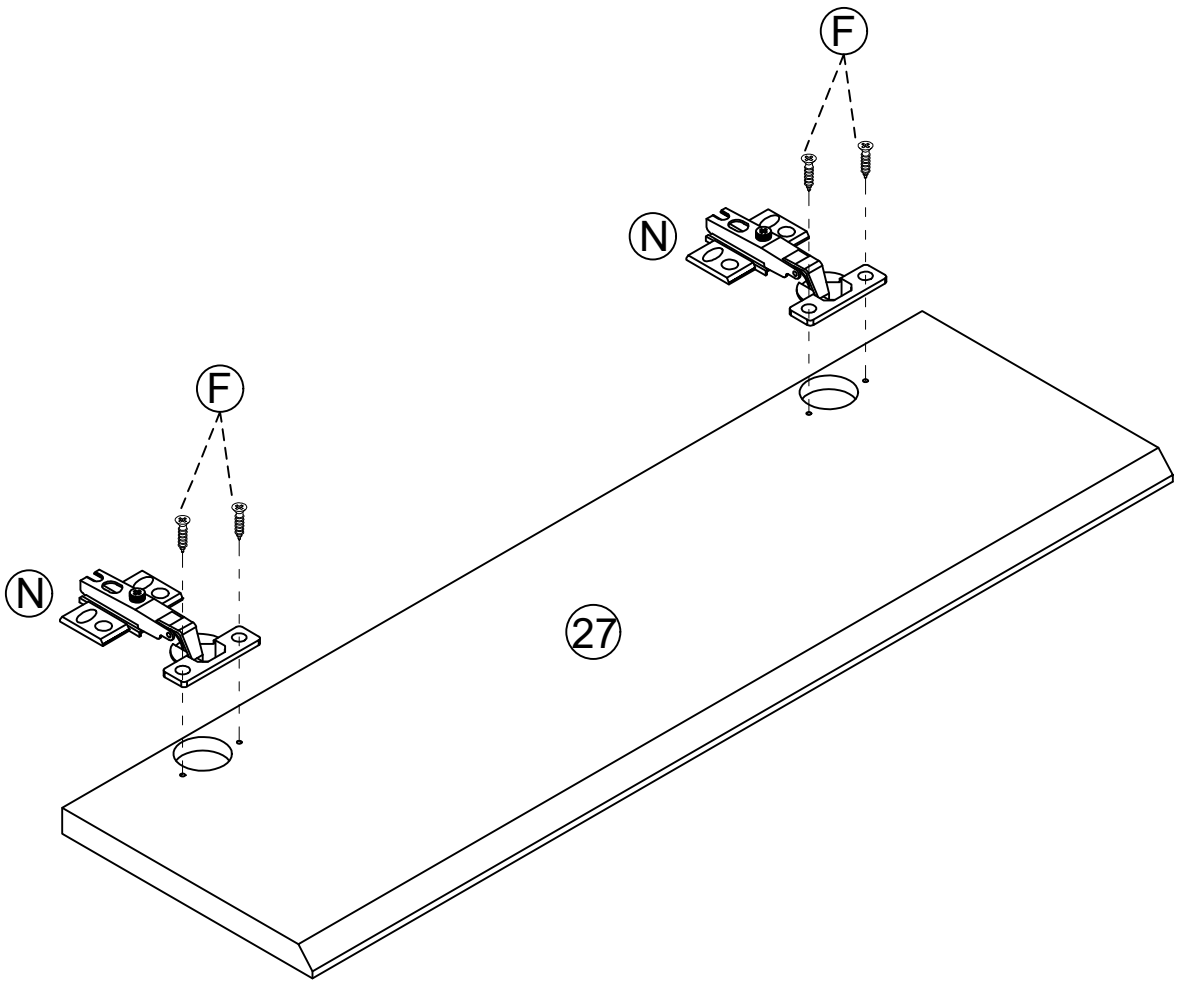

F Ø3.5*12mm F x 8

N N x 4

Step 38

F



Ø3.5*12mm

F x 8

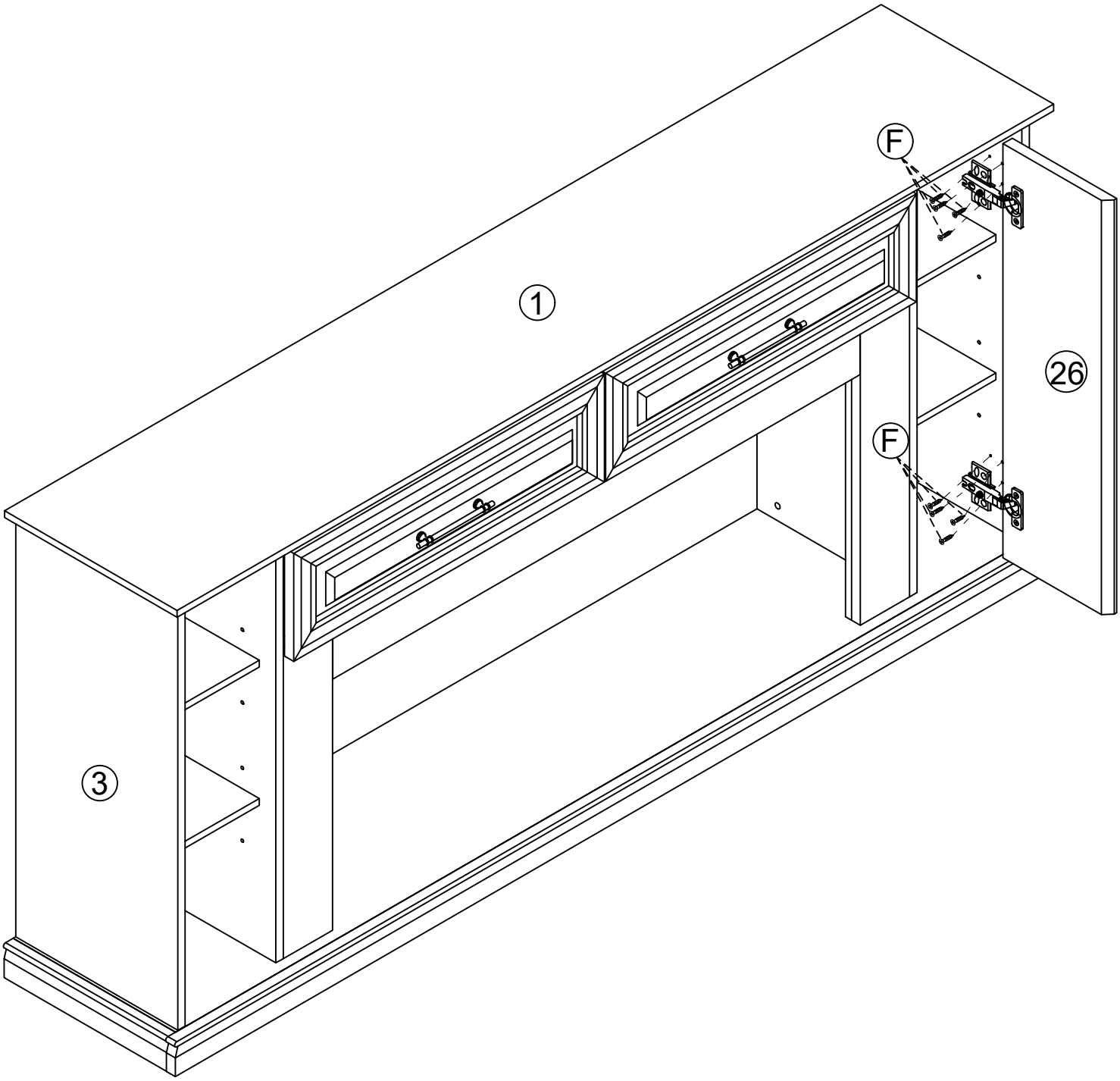

Step 39

Ⓕ Ø3.5*12mm
F x 8

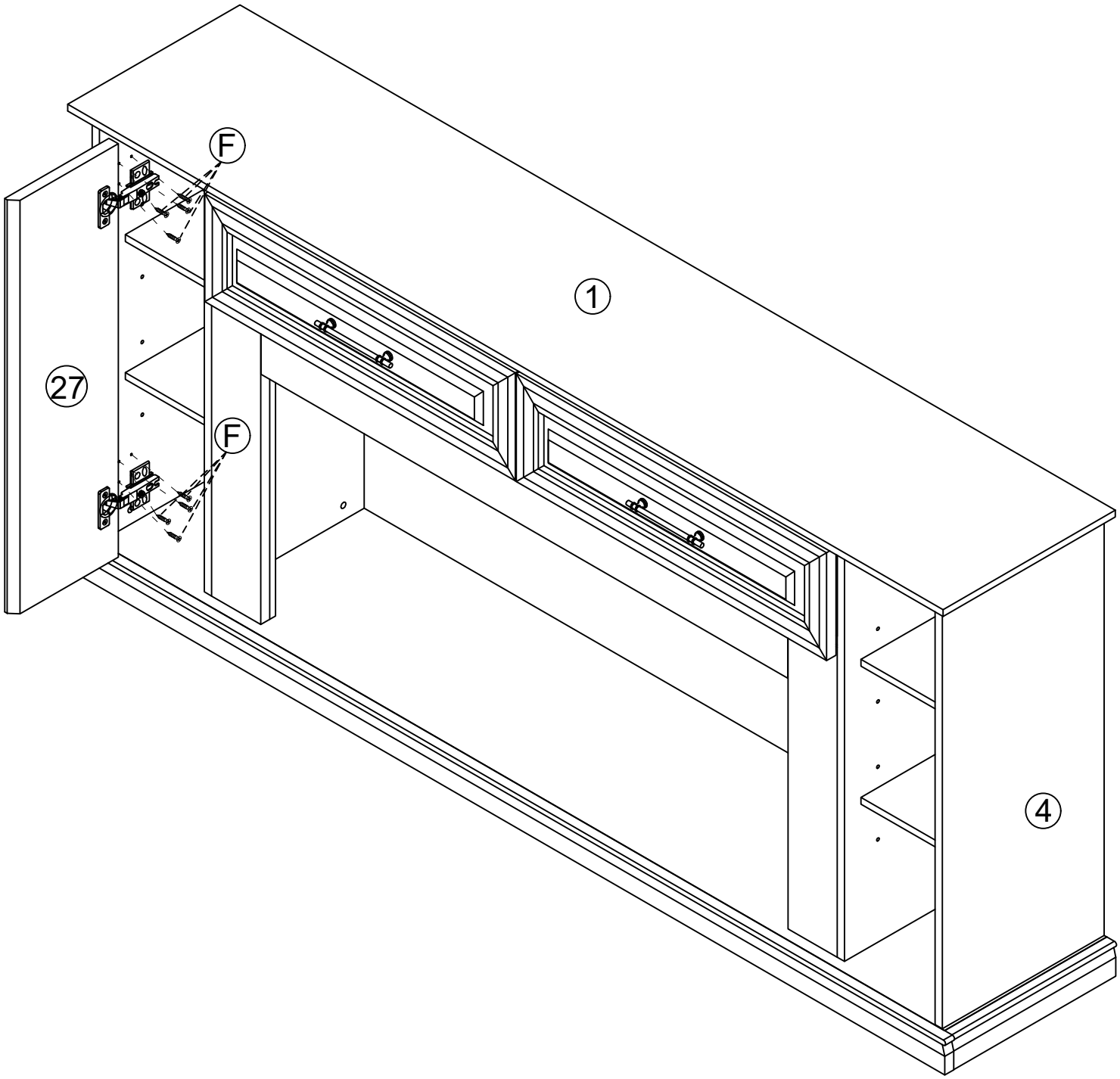

Step 40

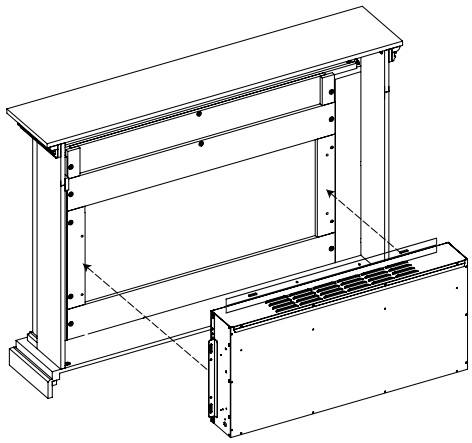

Figure 1

Step One

Figure 1

From the rear of the mantel insert the firebox into the opening.
Note: Your mantel may vary slightly from the one depicted in this illustration.

Step Two

Figure 2

Attach the firebox to the back of the mantel with the 6 supplied screws.

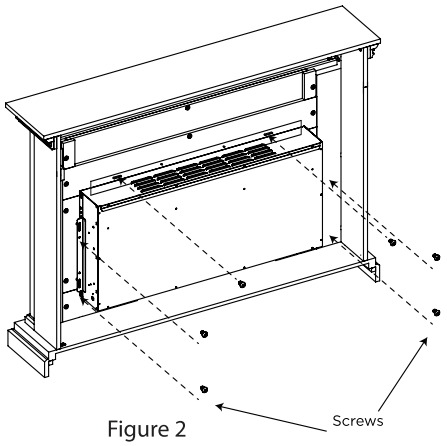

Figure 2

Step 41

P2

P2 x 2

P3

P3 x 2

