Loft Bed

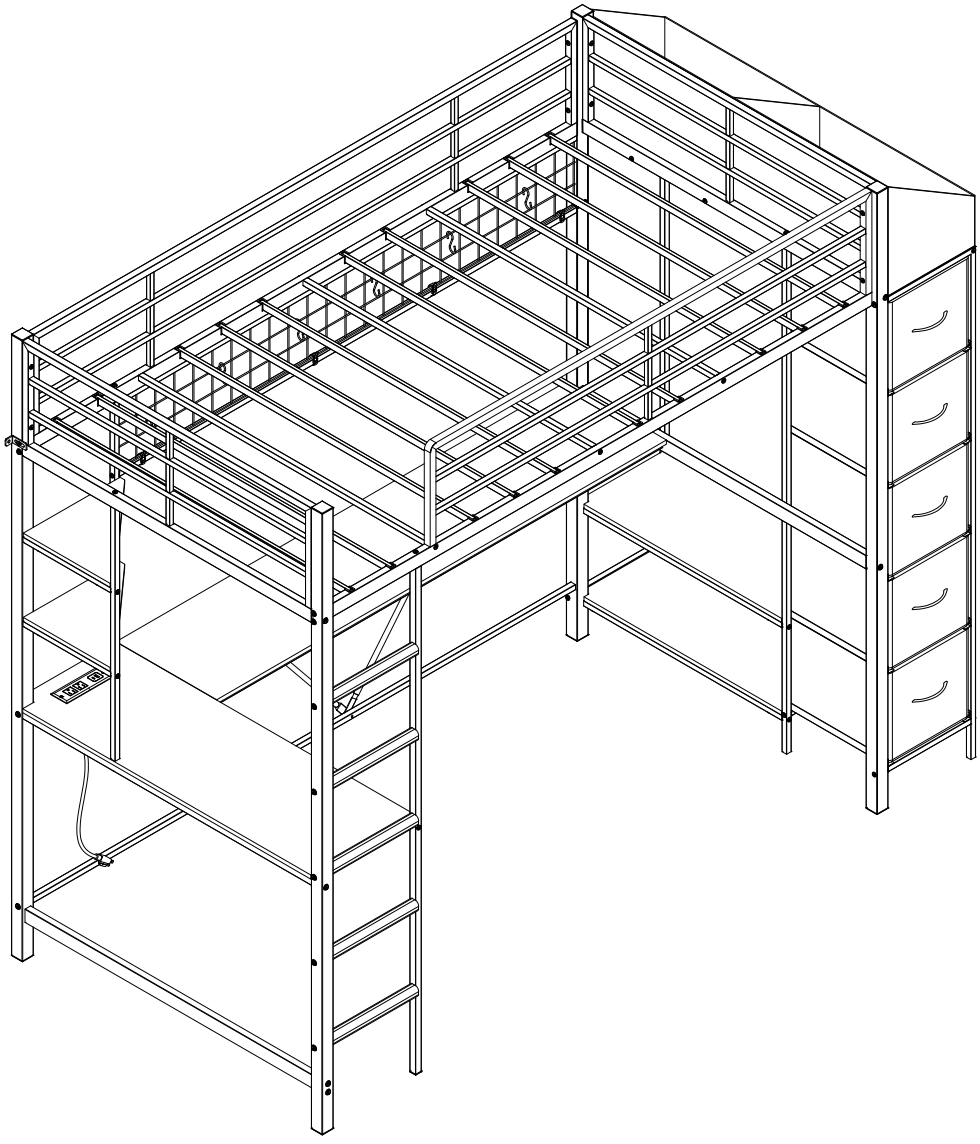

AJ-DJ505234

Version 1.1

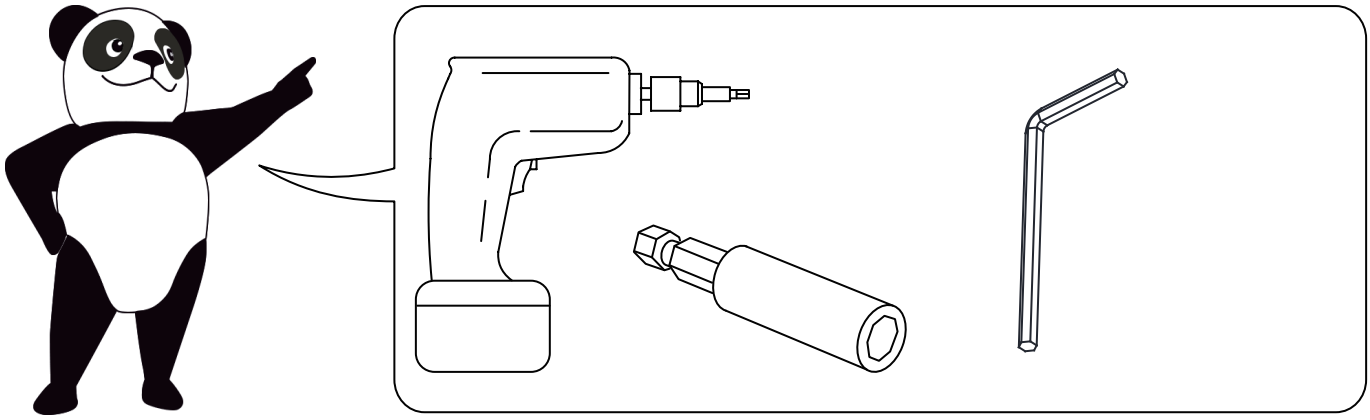

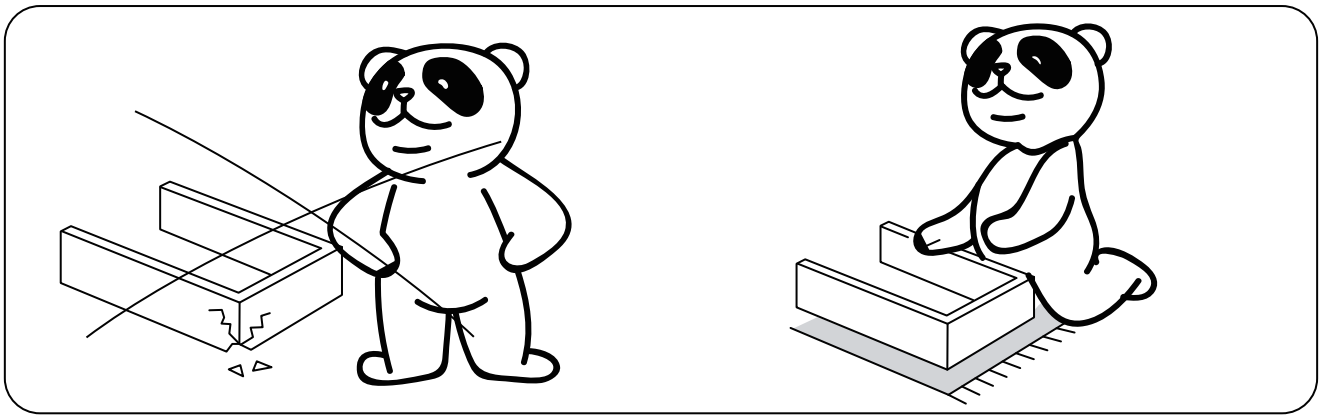

Violent installation is prohibited

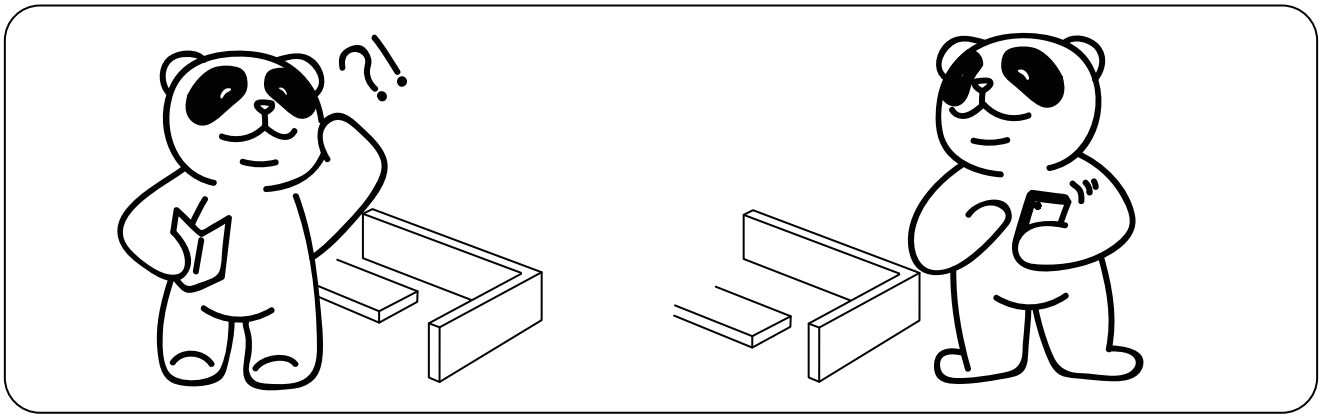

Please call if you need help

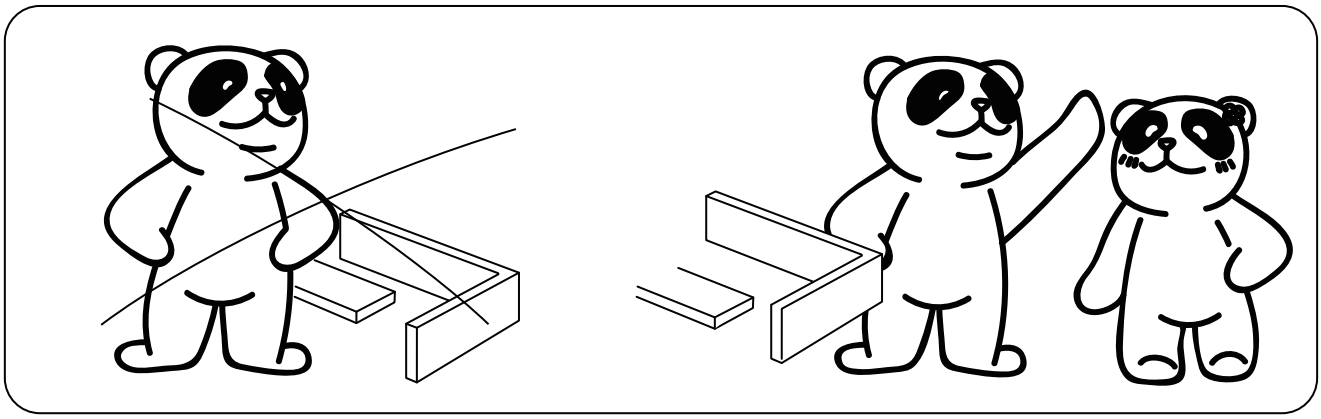

Multi-person cooperation is recommended

⚠Pls make sure all the accessories are complete!

BOX : A

PACKING DETALS:TOTAL 2 BOXES

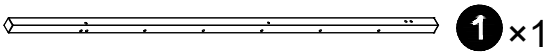
1 ×1

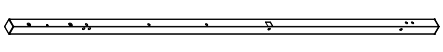
2 ×1

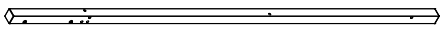
3 ×1

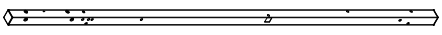
4 ×1

5 ×1

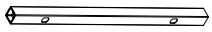
7 ×2

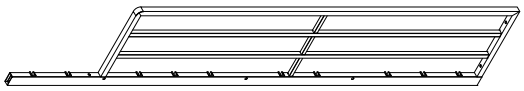
8 ×1

10 ×1


13 ×5


14 ×1

12 ×1

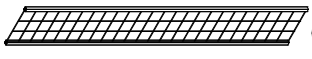
17 ×1

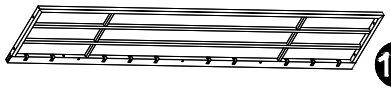
18 ×1

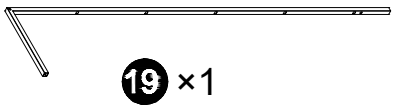
19 ×1


20 ×1

21 ×1

22 ×2


23 ×1

24 ×1


28 ×1

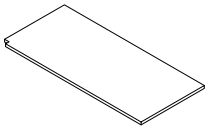
32 ×2

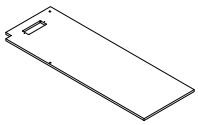
35 ×1

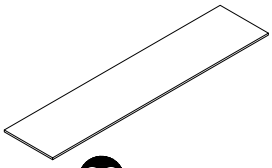
36 ×1


39 ×5

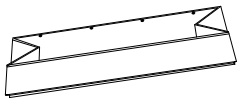
41 ×1

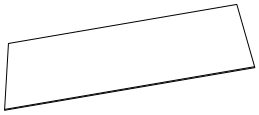
42 ×1


43 ×1


45 ×10+1


47 ×5

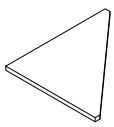
48 ×2


49 ×5

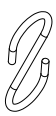
50 ×6


51 ×2

⚠Pls make sure all the accessories are complete!

BOX : B

PACKING DETALS:TOTAL 2 BOXES



6 ×1

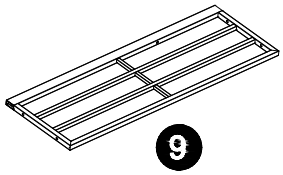

9 ×1

11 ×1

15 ×1



16 ×2

25 ×2 long

26 ×2 short

27 ×1

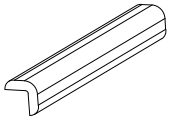

29 ×5

30 ×1

31 ×1



33 ×5



34 ×5

37 ×10

38 ×3

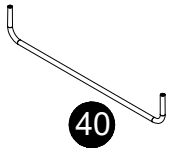

40 ×1

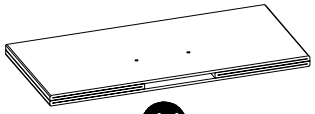

44 ×5

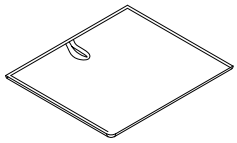

46 ×5

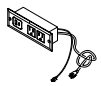

52 ×1

HARDWARE LIST



A
M4*10
x2+1



B
M5*25
x2+1



C
M6*20
x16+1



D
M6*24
x12+1

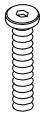

E
M6*28
x14+1

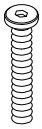

F
M6*35
x54+5

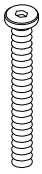

G
M6*60
x35+3



H
M6 washer
x30+3

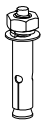

I
M6*75
x2

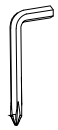

J
4#
x1



K
4#
x2

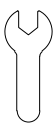

L
M6
x1



M
Ø9
x1

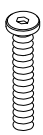

N
M6*45
x2+1



O
3#
x1

Note:

1,Should be assembled on flat ground to keep balance.

2.Before completing the installation,do not tighten the screws.

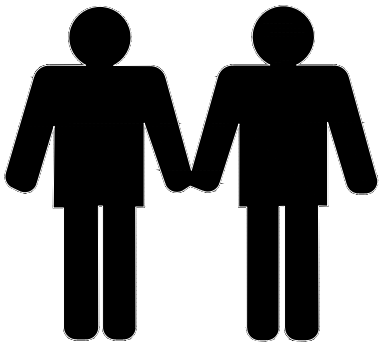

It needs at least
two people to install

Before starting the assembly , you must read the whole manual and follow the instructions .

This set comes in 2 boxes. If you do not receive a full set of 2 boxes,please contactour customerservice.

box A : 1-5, 7,8,10,12,13,14,17-22,23,24,28,32,35,36, 39,41-43,45,47,48,49,50,51,instructions;

box B : 6,9,11,15,16,25-27,29-31,33,34, 37,38,40,44,46,52, screw pack,instructions.

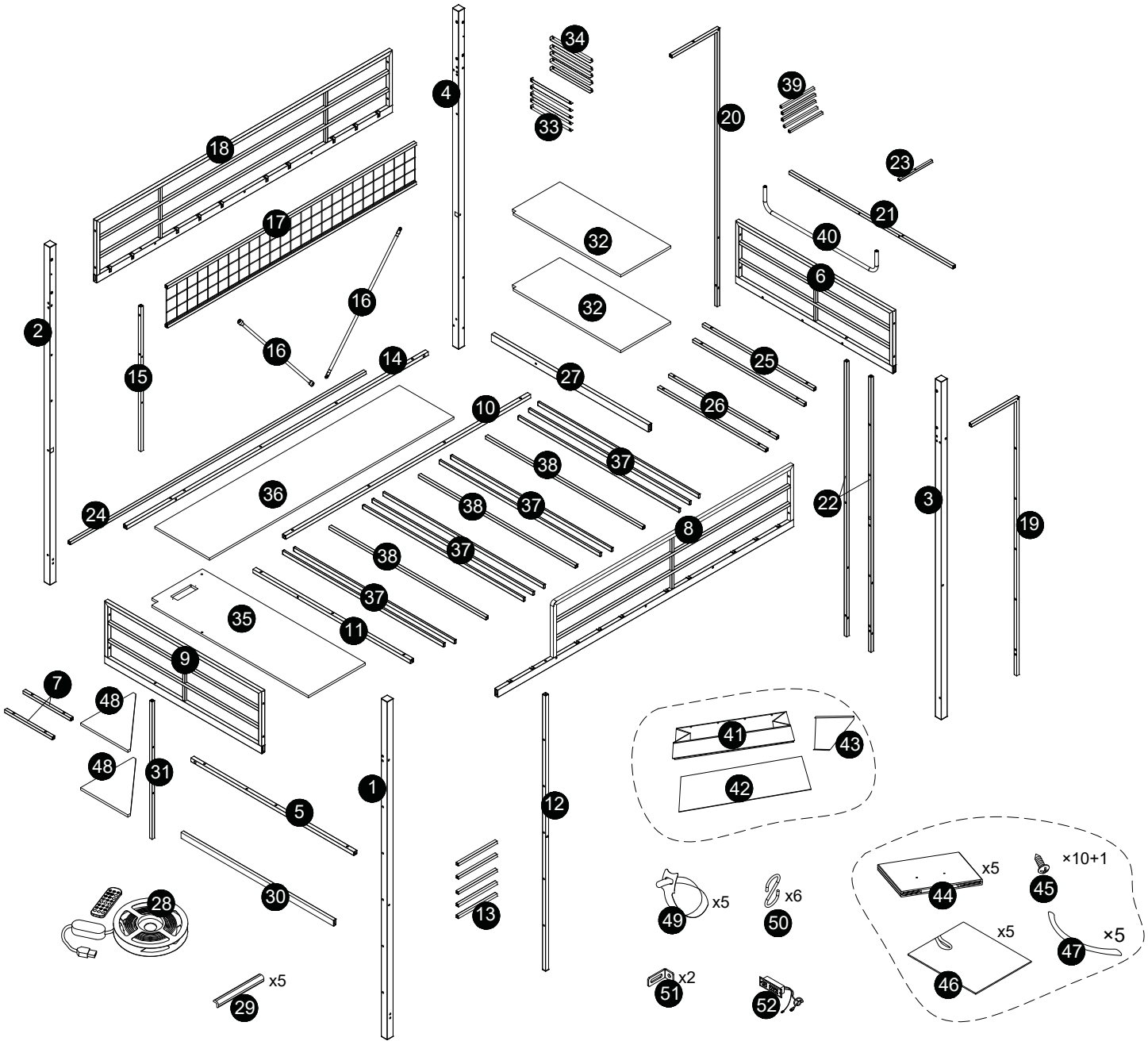

1

Please pay attention to the direction of the hole position.

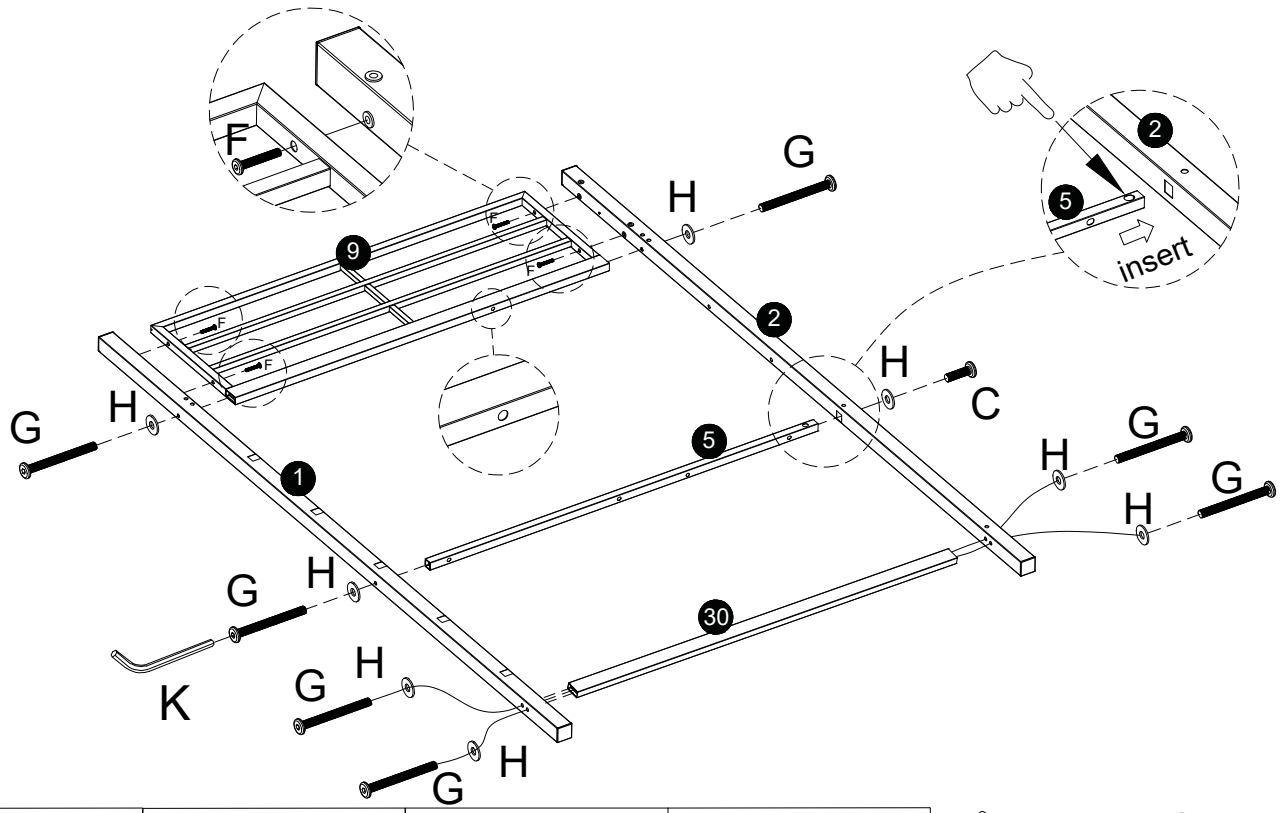

G M6*60 x7	F M6*35 x4	H M6 washer x8	C M6*20 x1

⚠ Be careful not to overtighten the screws.

2

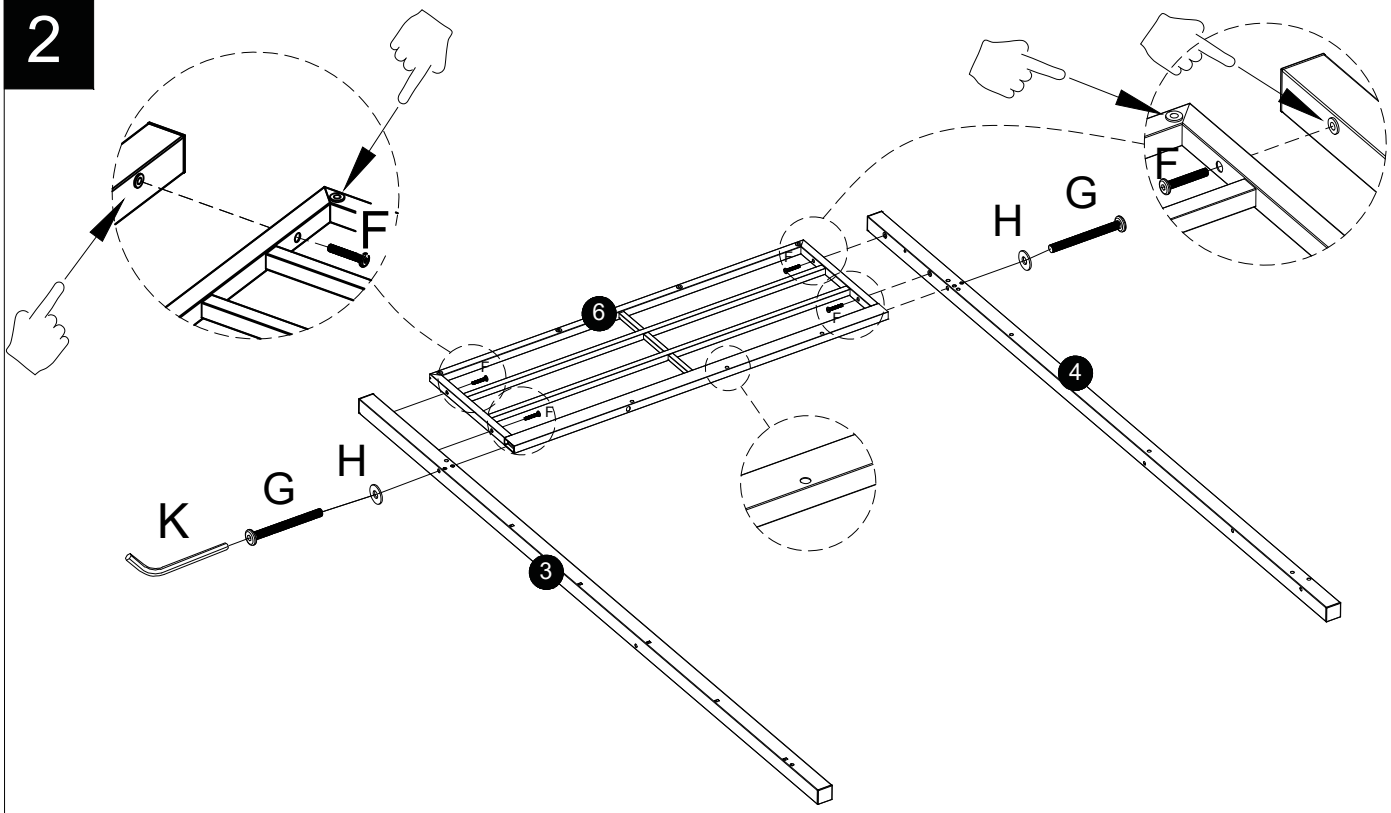

G M6*60 x2	H M6 washer x2	F M6*35 x4

⚠ Be careful not to overtighten the screws.

3

Be careful not to overtighten the screws.

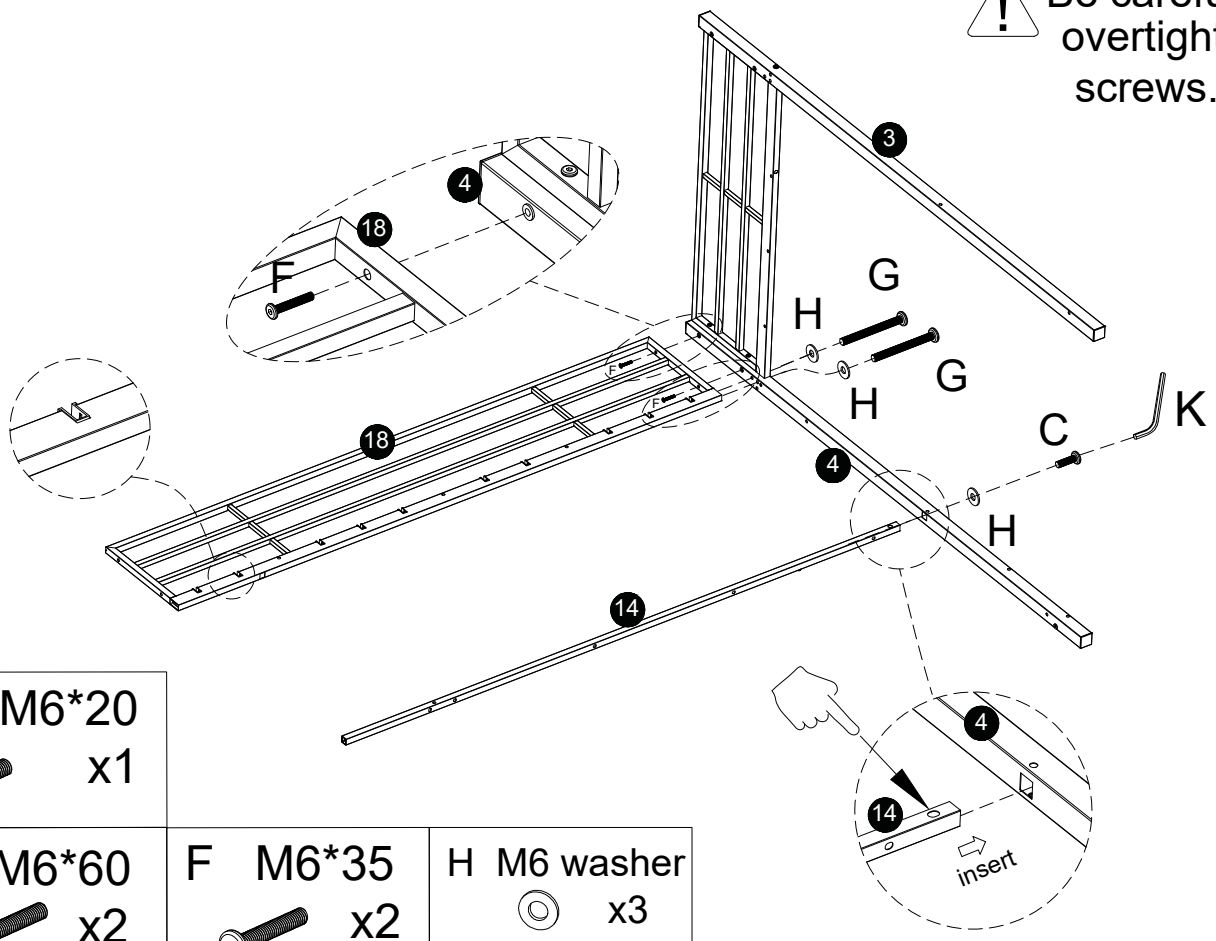

C M6*20 x1		
G M6*60 x2	F M6*35 x2	H M6 washer x3

4

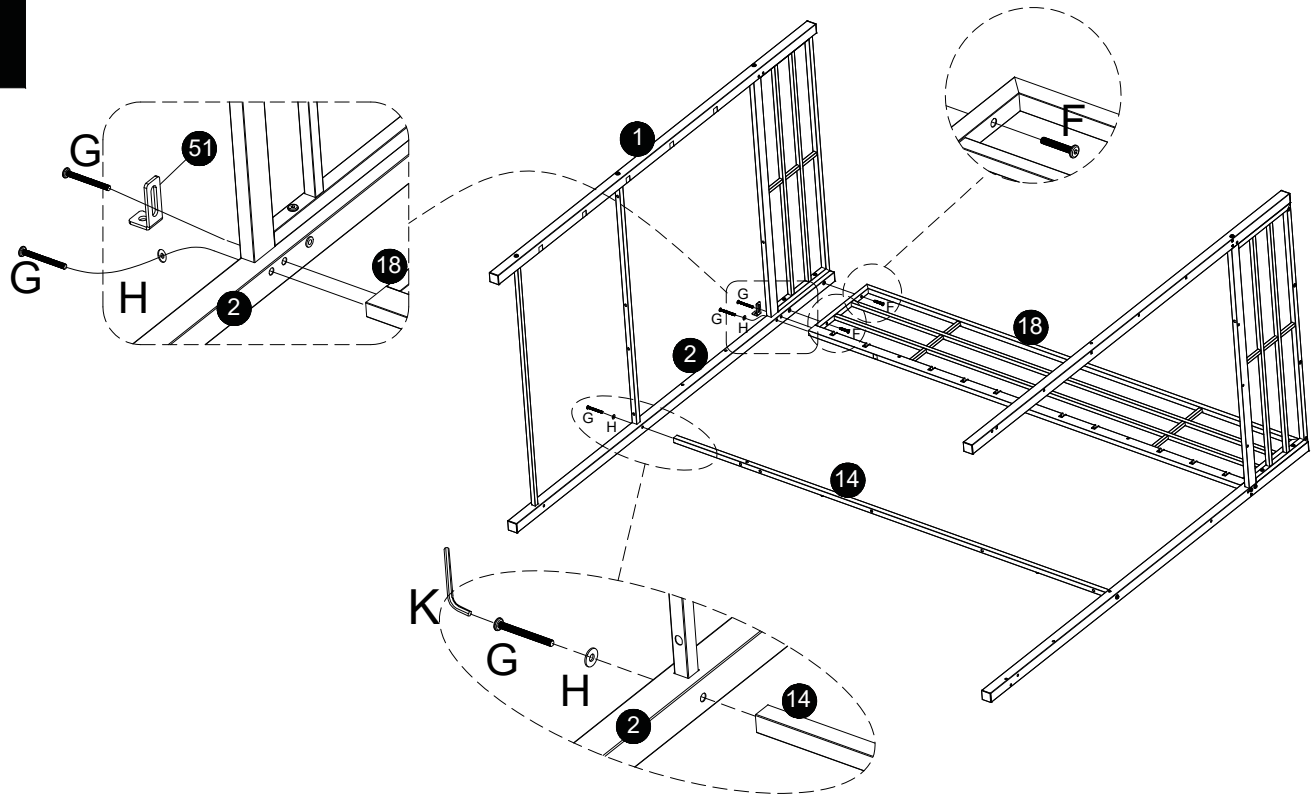

G M6*60 x3	F M6*35 x2	H M6 washer x2

5

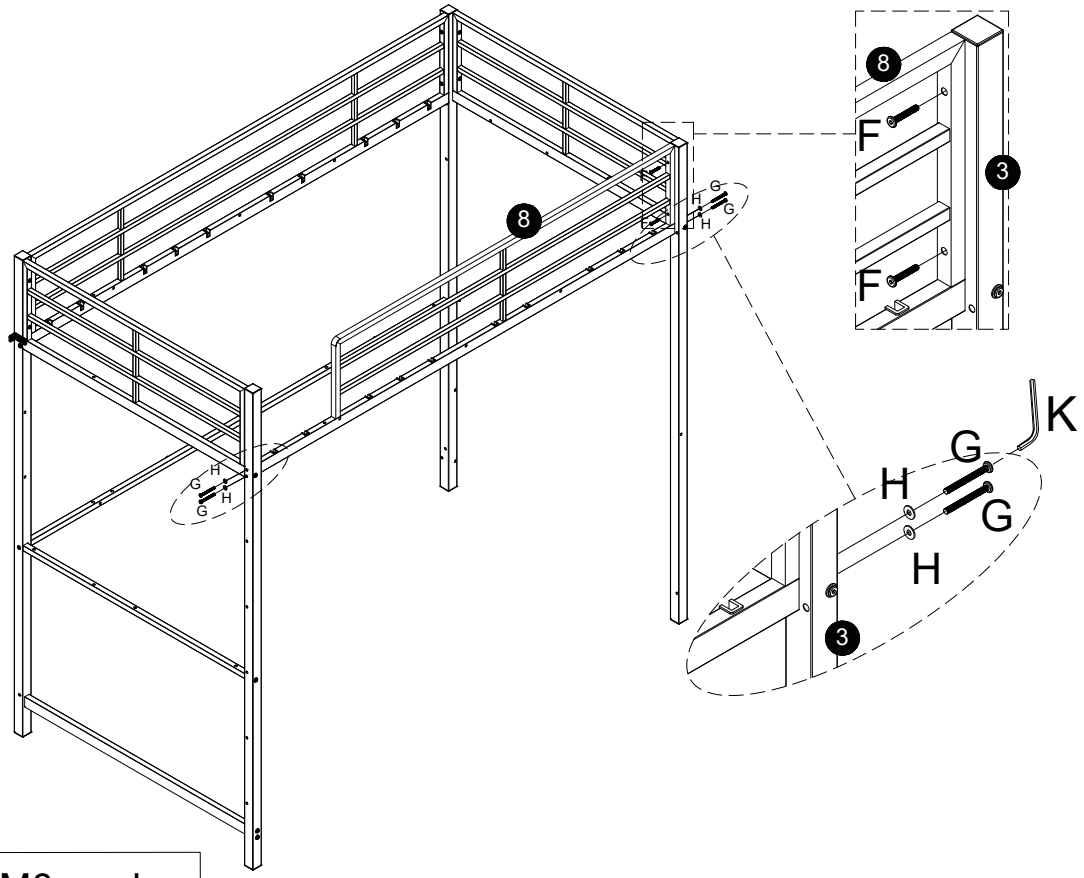

F M6*35 x2	
G M6*60 x4	H M6 washer x4

6

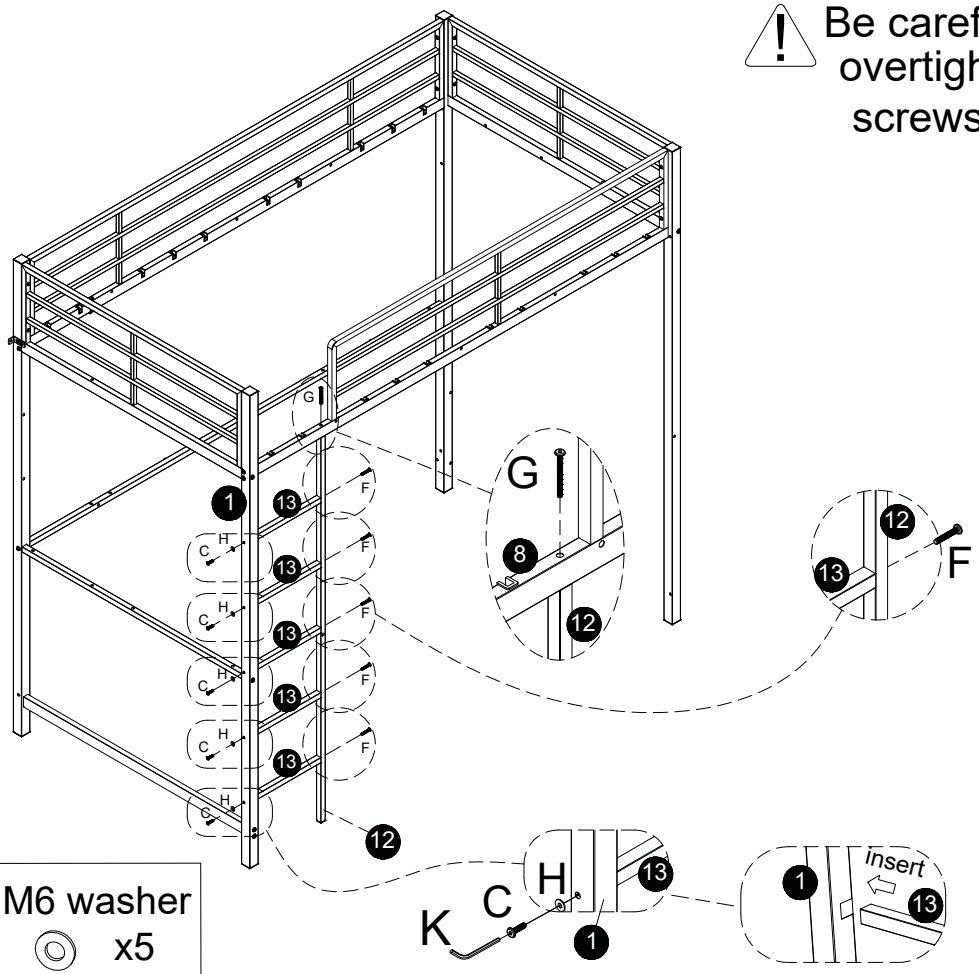

Be careful not to overtighten the screws.

G M6*60 x1	
F M6*35 x5	
C M6*20 x5	H M6 washer x5

7

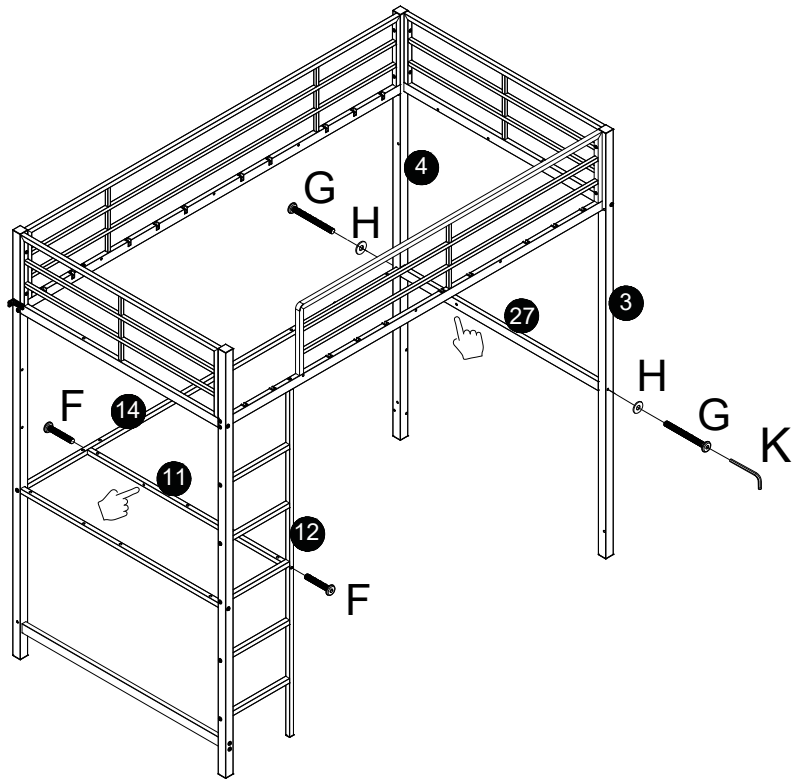

G M6*60 x2	H M6 washer x2	F M6*35 x2

8

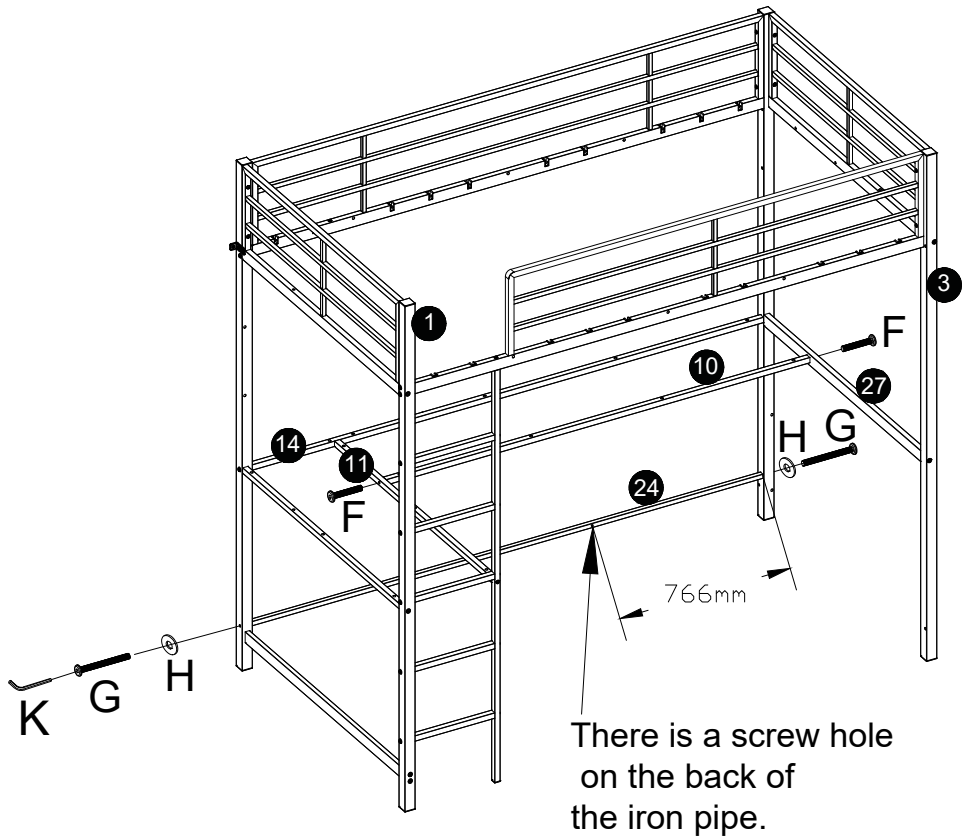

G M6*60 x2	F M6*35 x2	H M6 washer x2

9

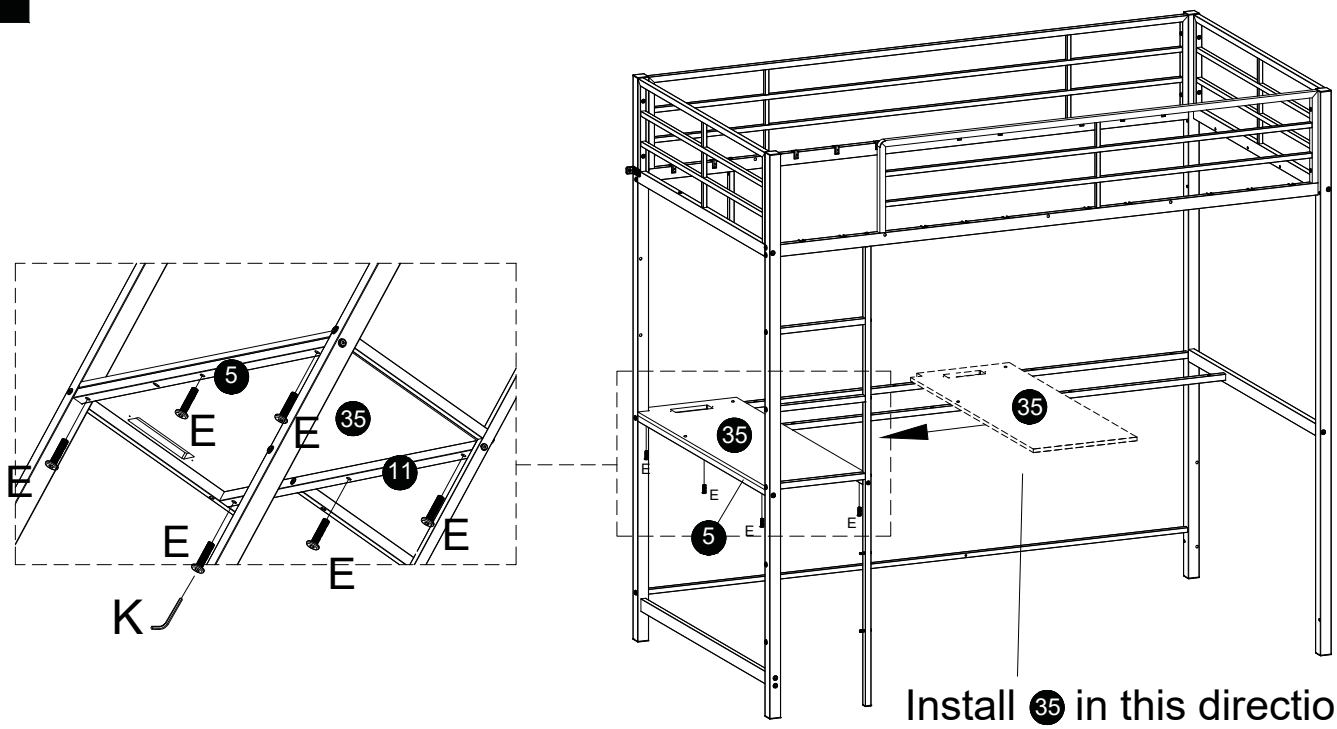

E M6*28 x6

10

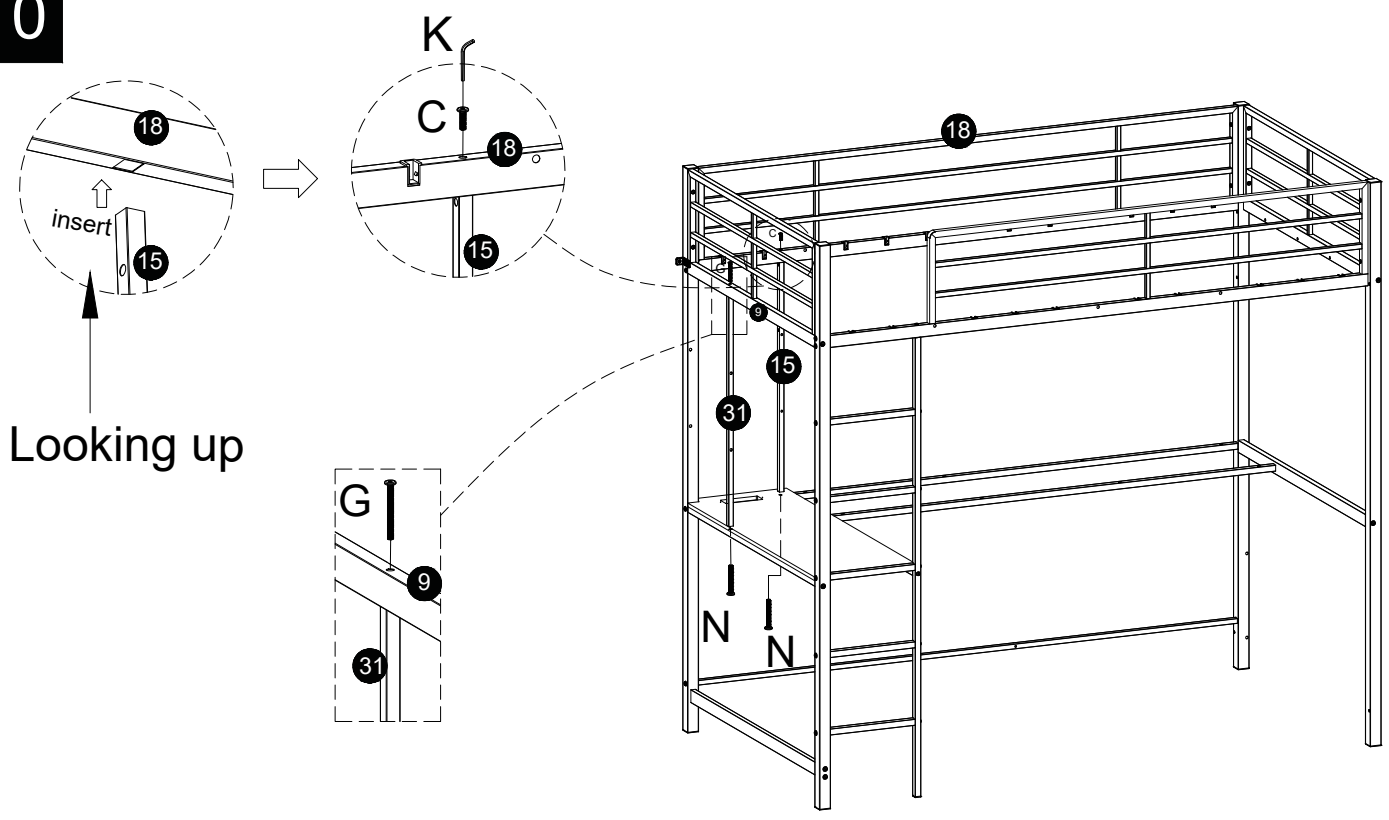

G M6*60 x1	C M6*20 x1	N M6*45 x2

11

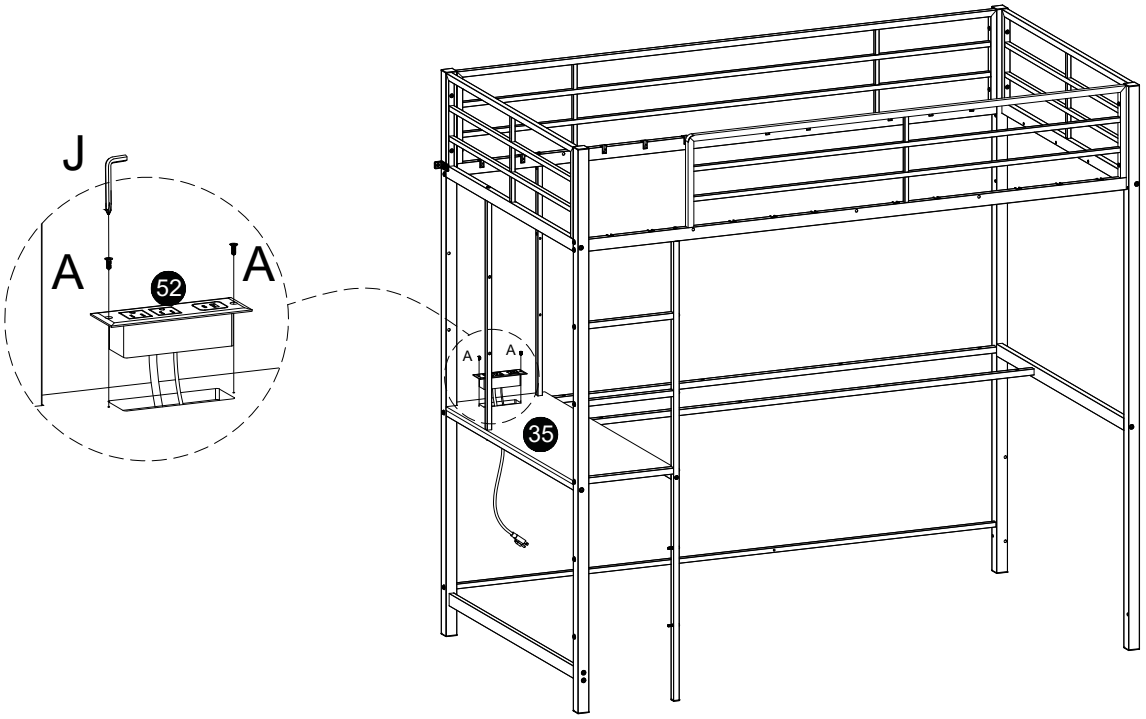

A M4*10 x2

12

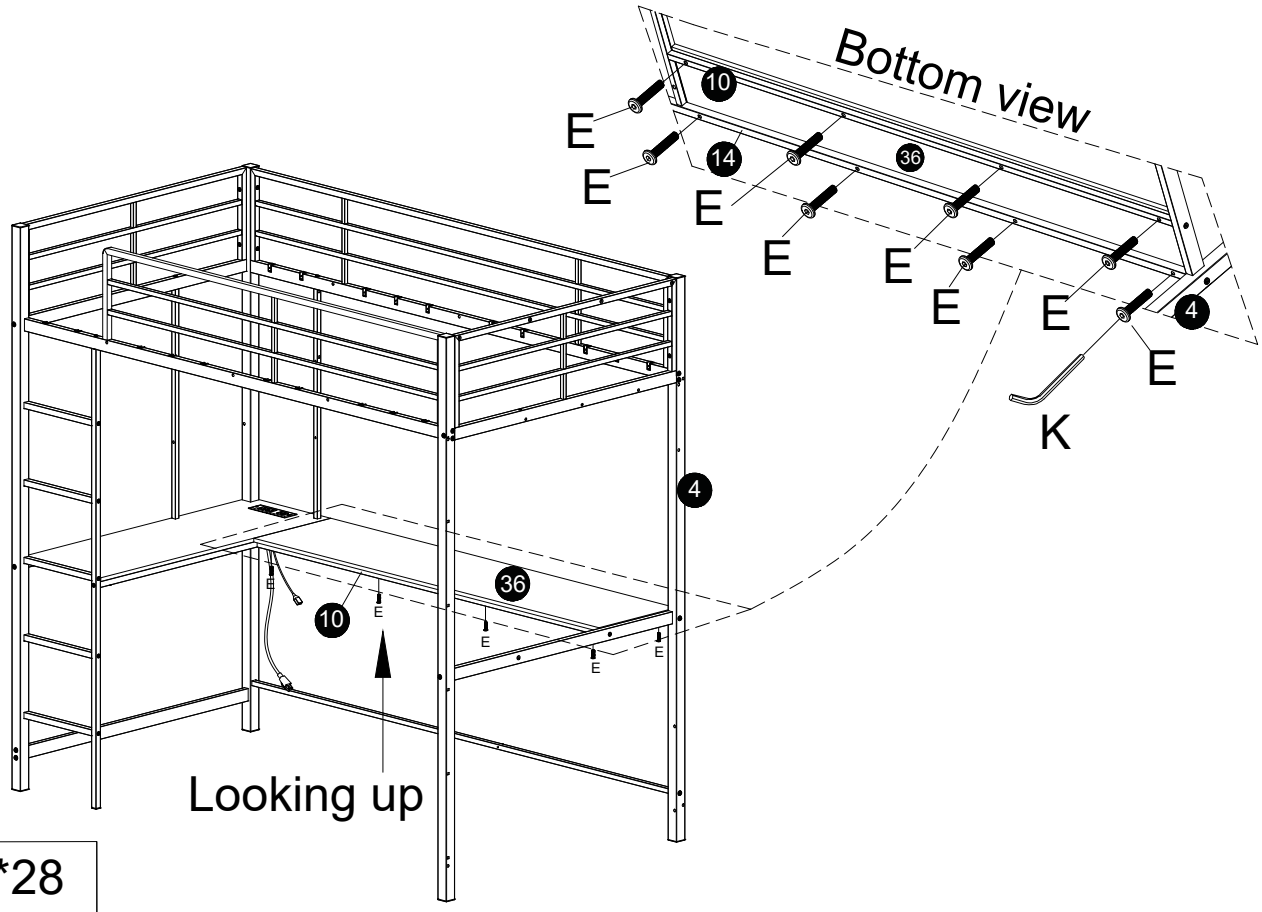

E M6*28 x8

13

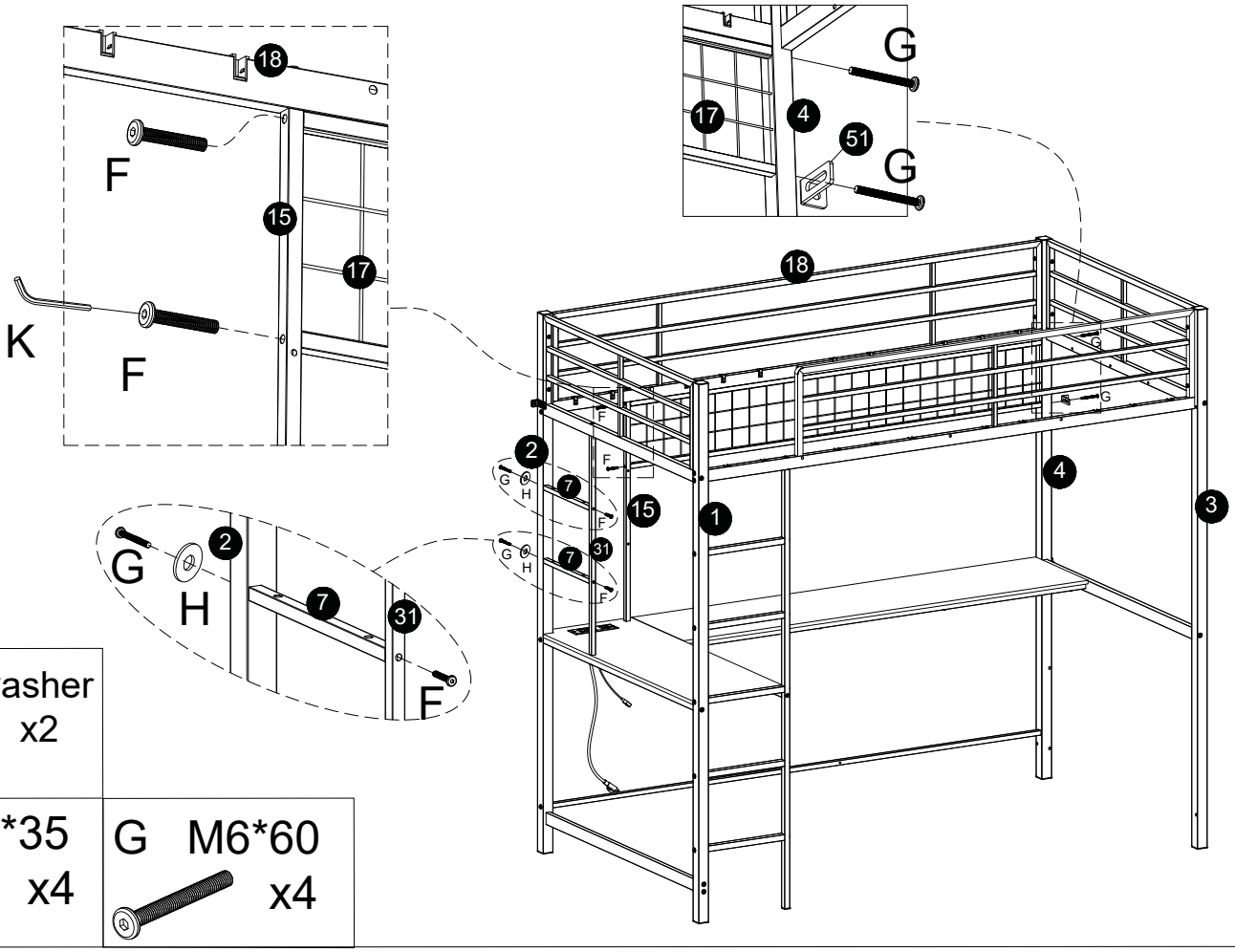

H M6 washer x2

F M6*35 x4

G M6*60 x4

14

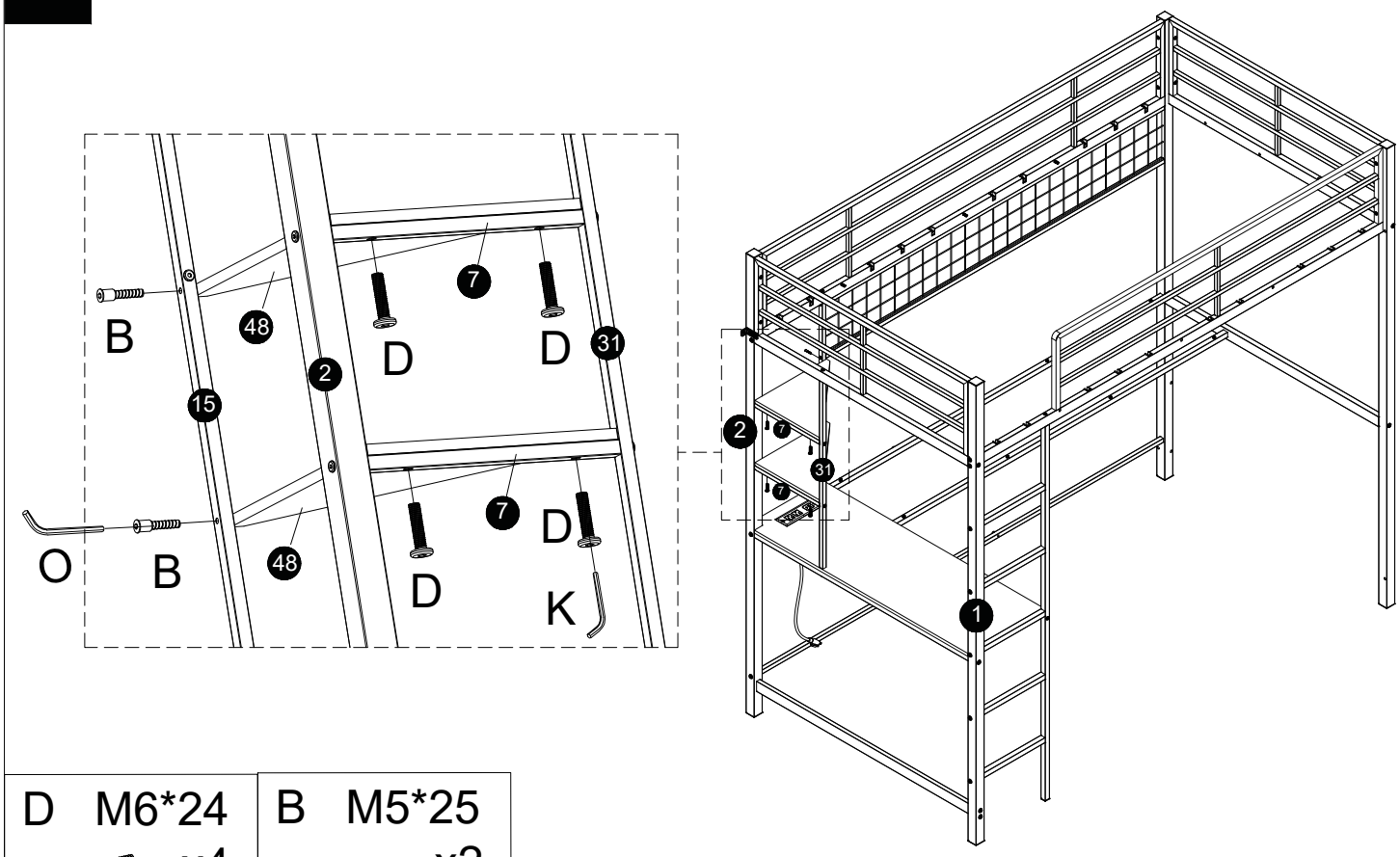

D M6*24 x4

B M5*25 x2

15

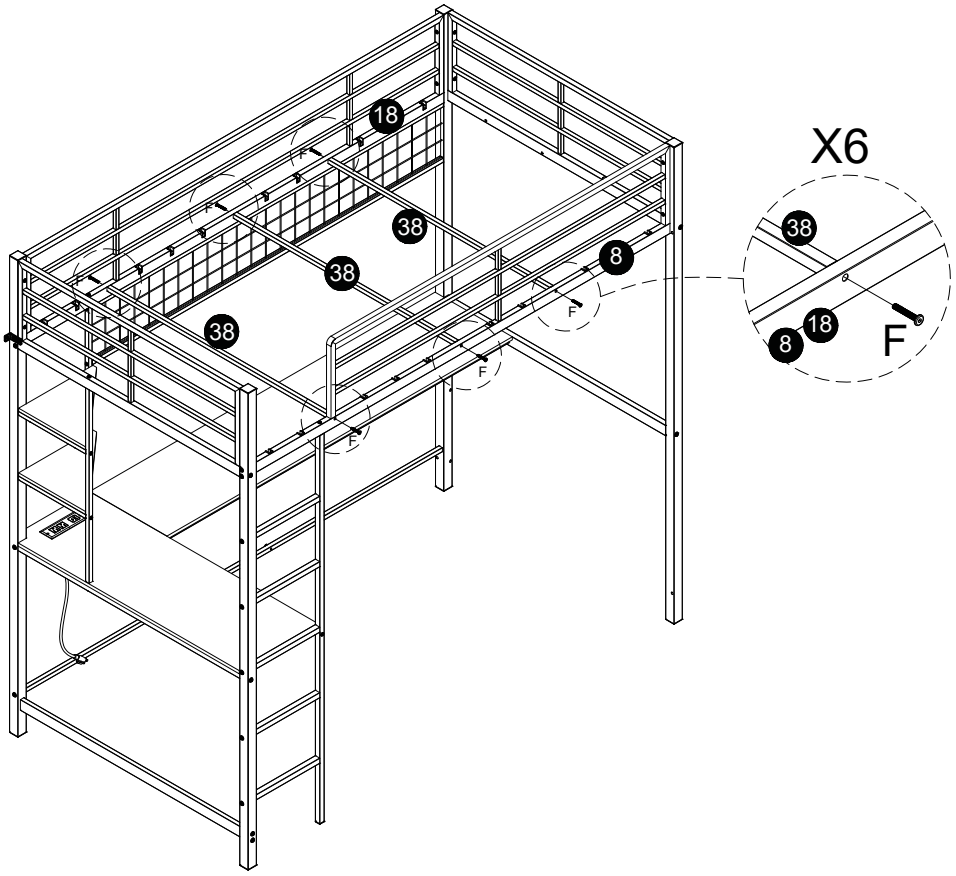

F M6*35 x6

16

Back view angle

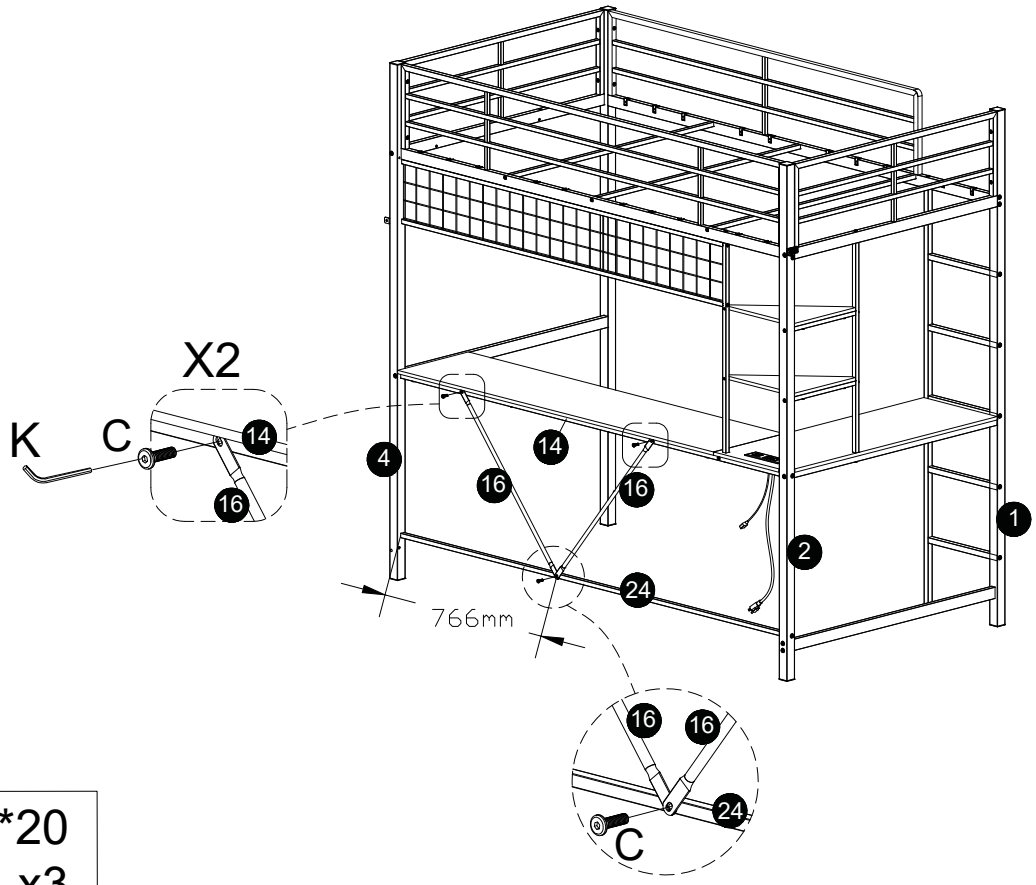

C M6*20 x3

17

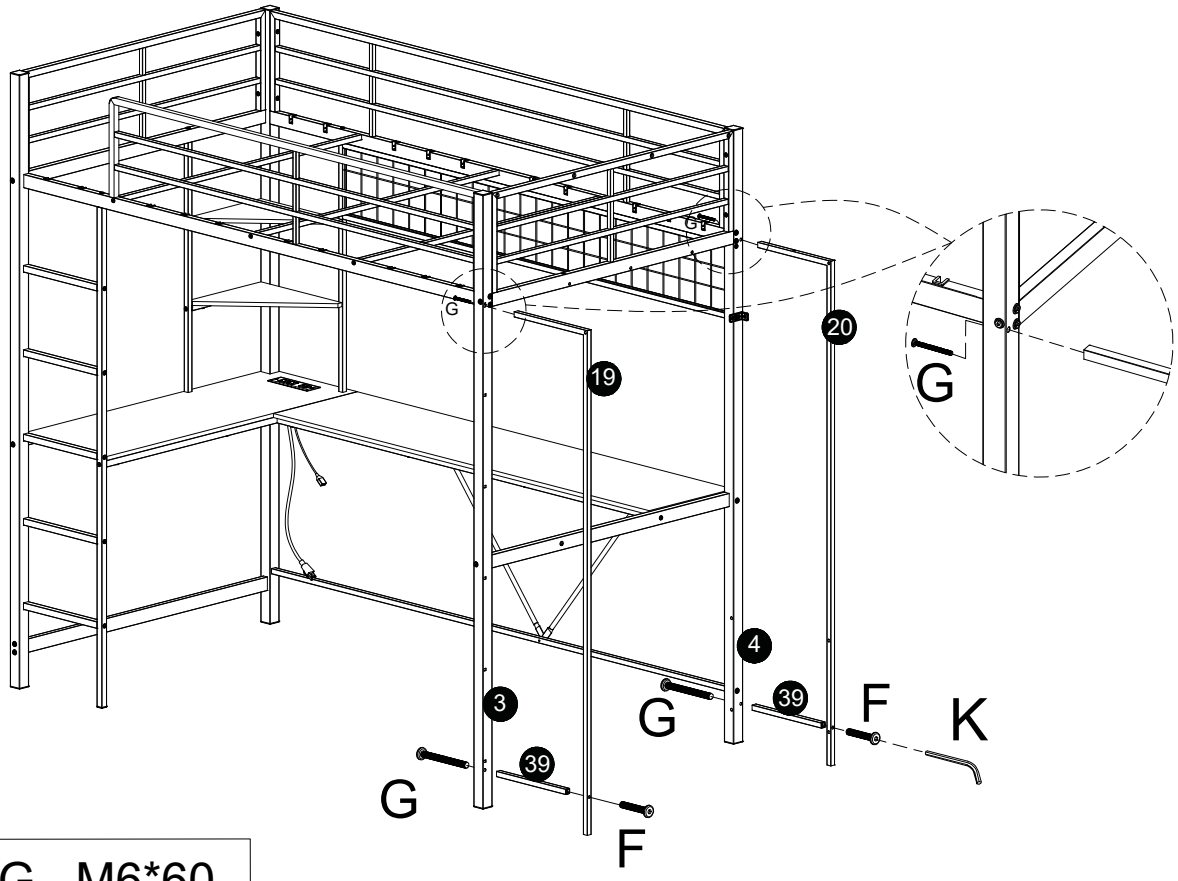

F M6*35 x2	G M6*60 x4

18

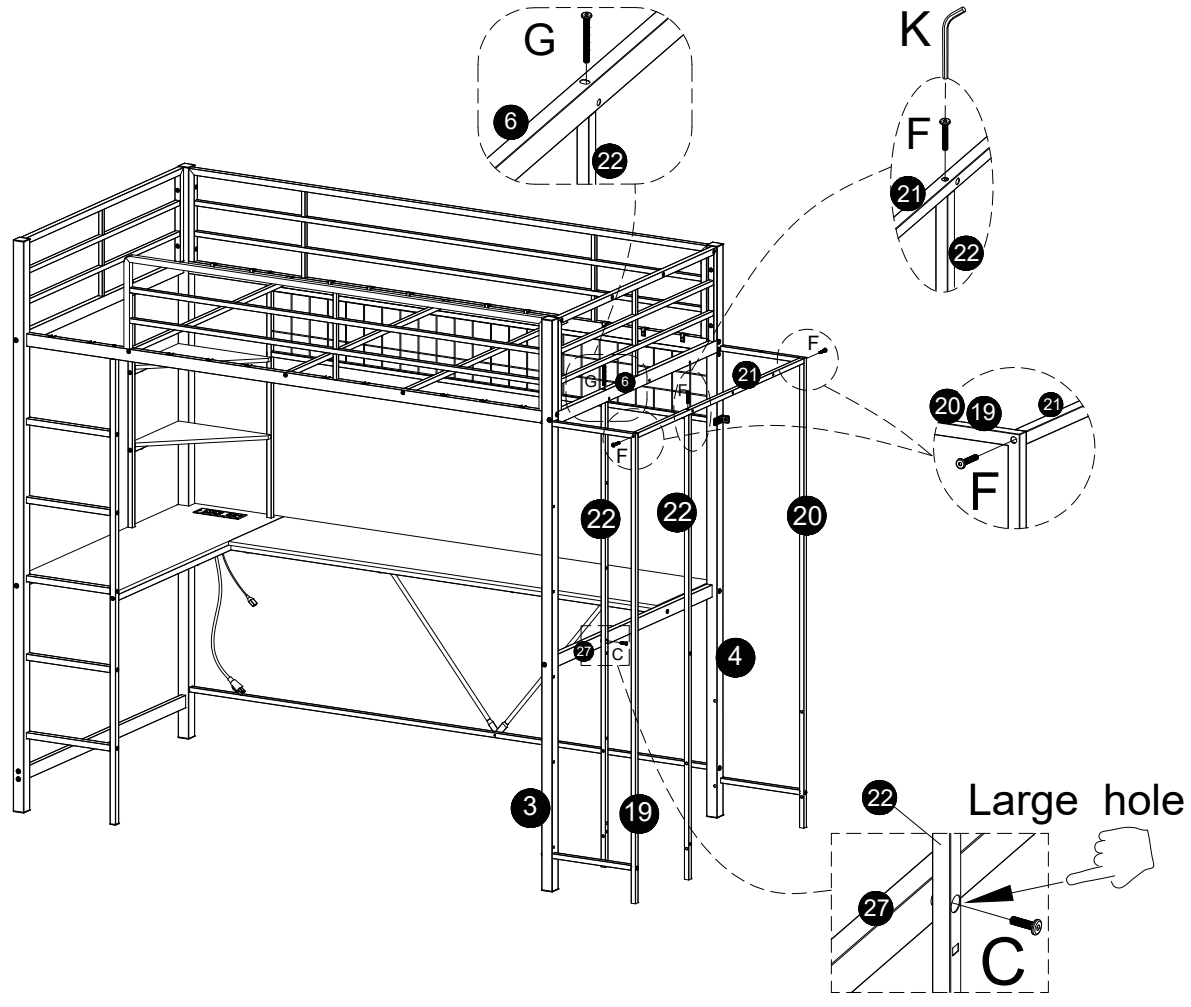

C M6*20 x1	G M6*60 x1	F M6*35 x3

19

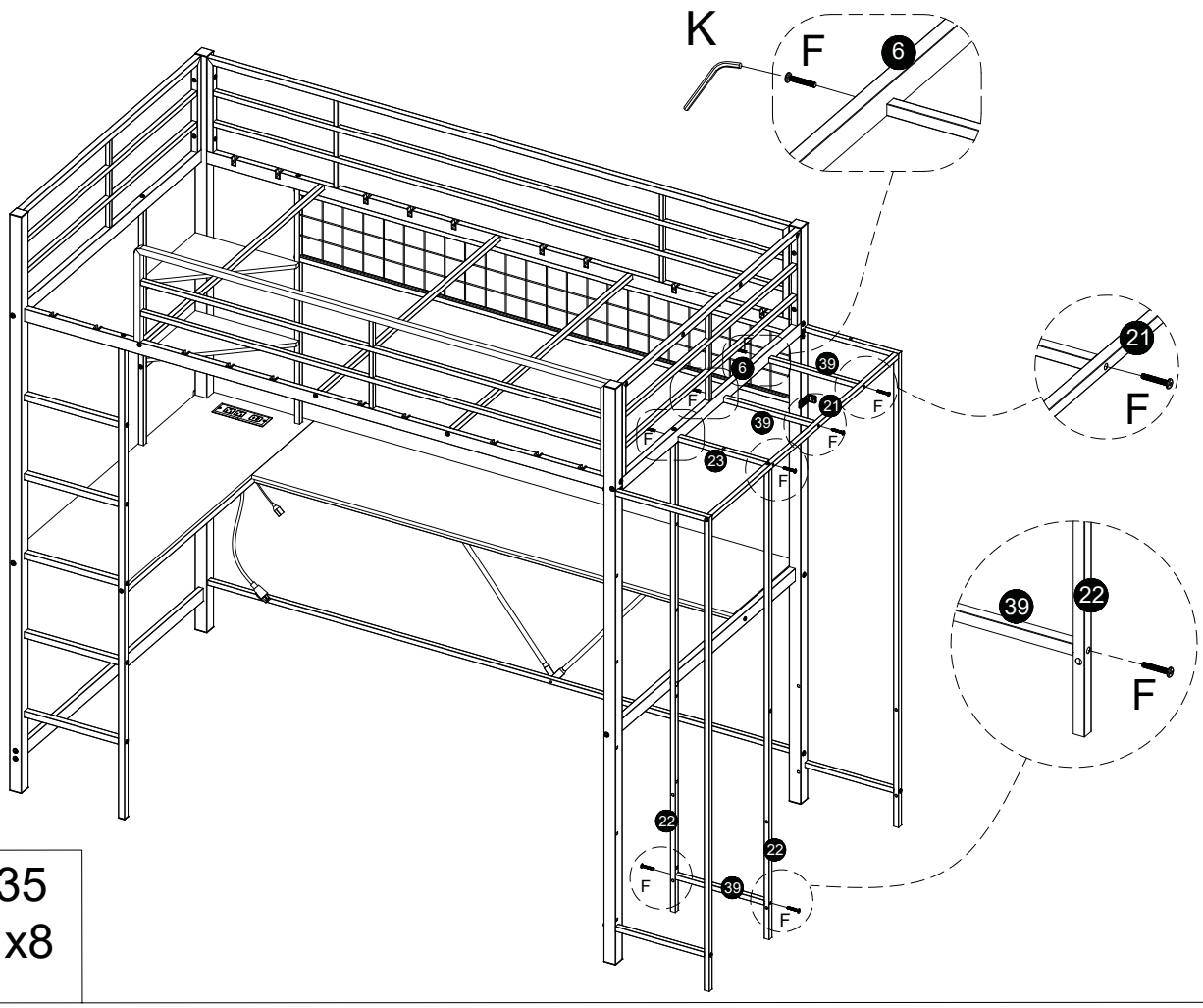

F M6*35



x8

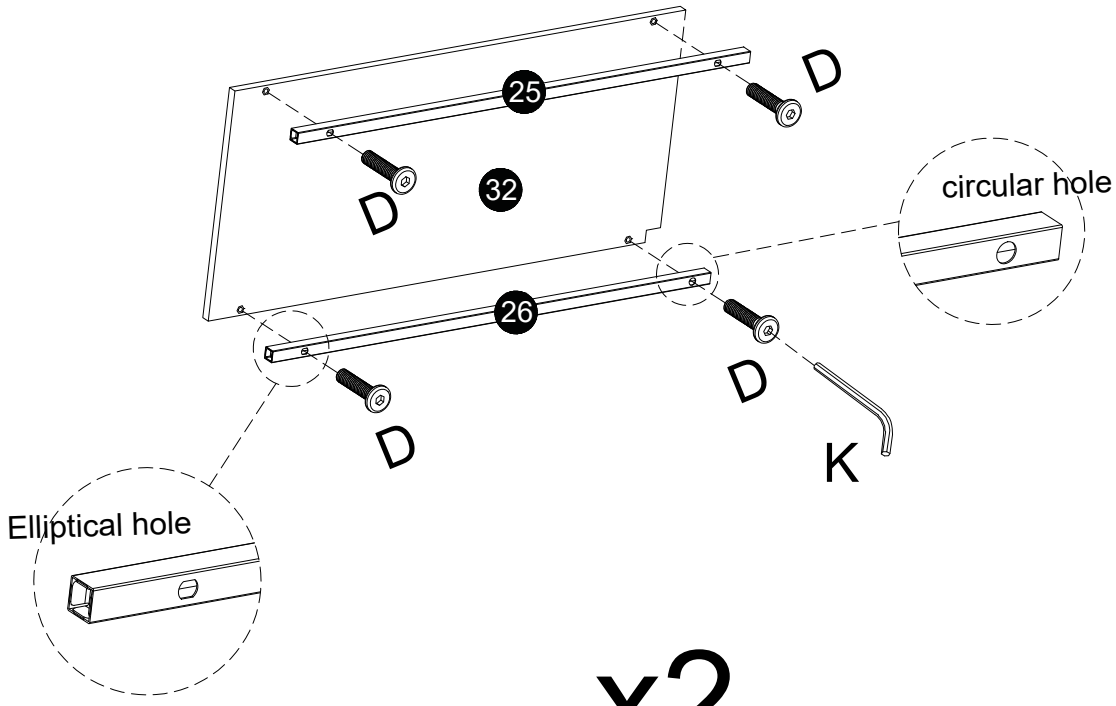

x2

D M6*24



x8

19

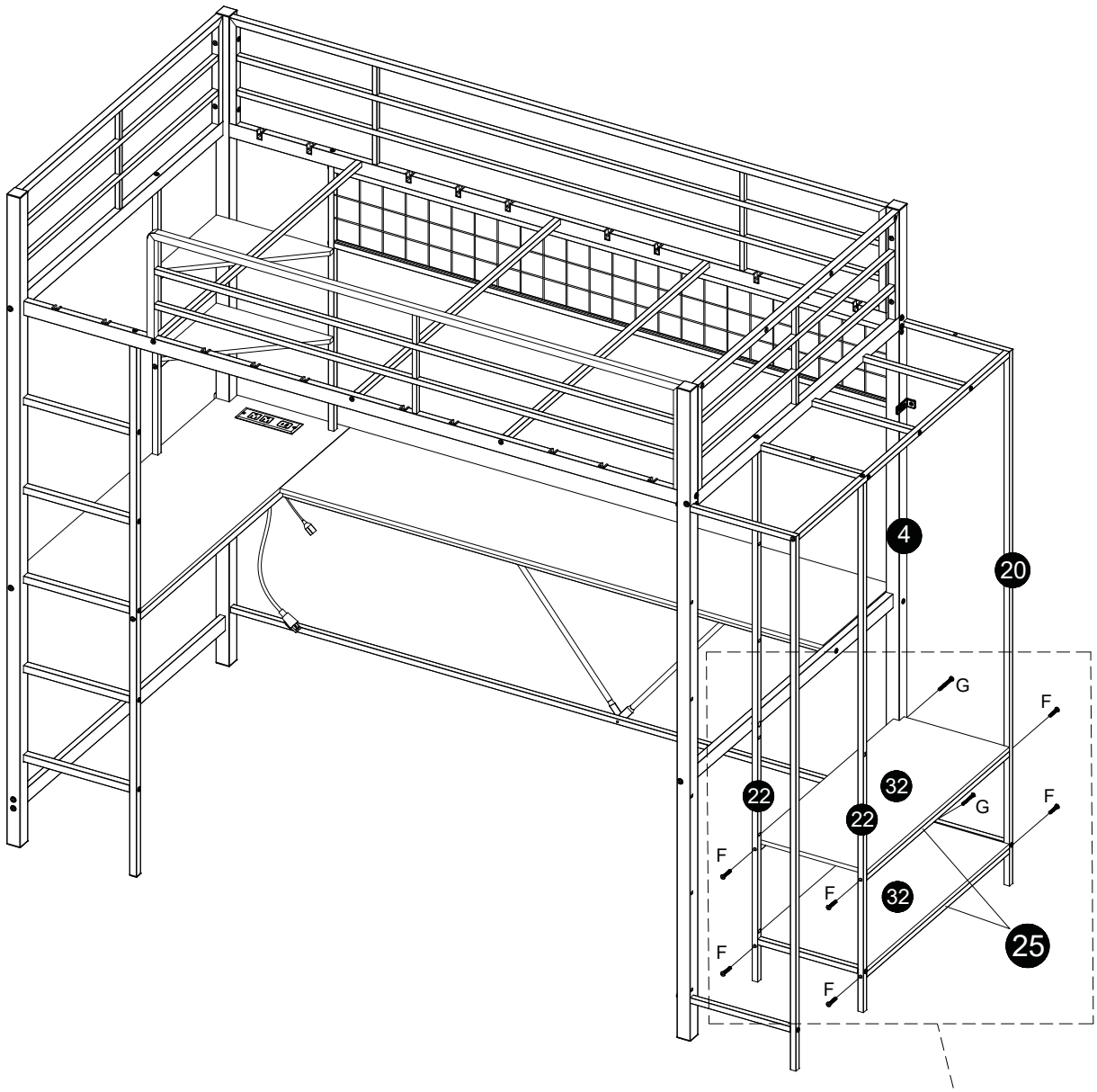

Bottom view

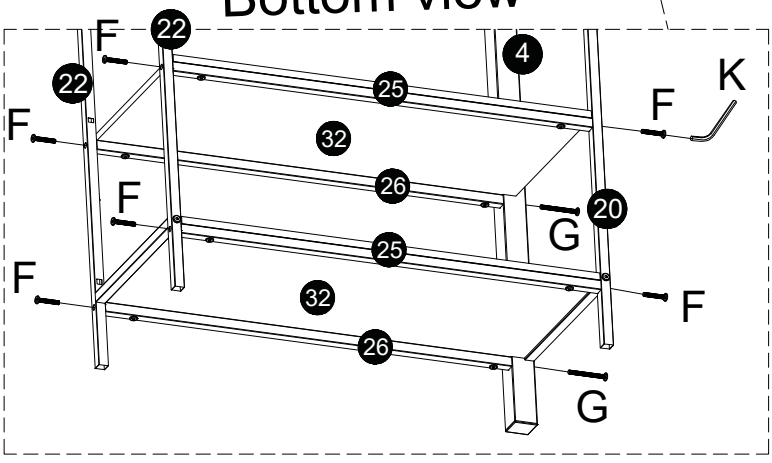

G M6*60 x2	F M6*35 x6

20

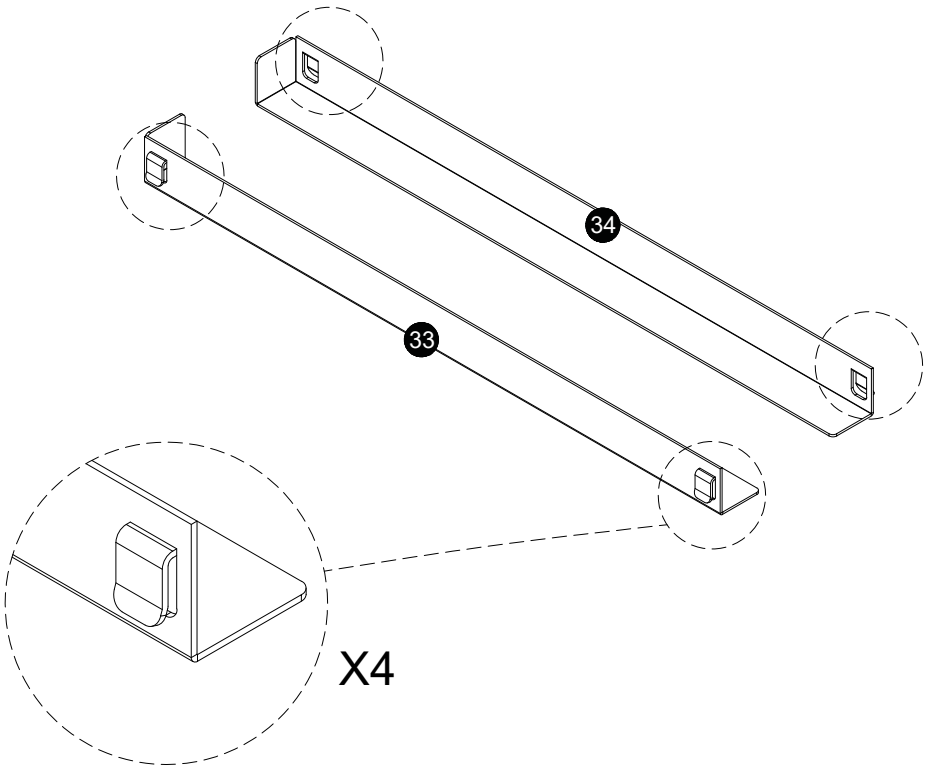

Check here before installation, if there is deformation due to squeezing, please adjust it with tools to avoid affecting normal installation.

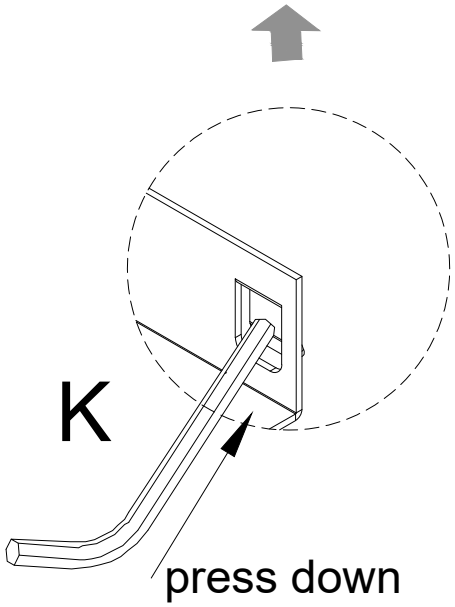

Please fine-tune in this direction to make it easier to install.

21

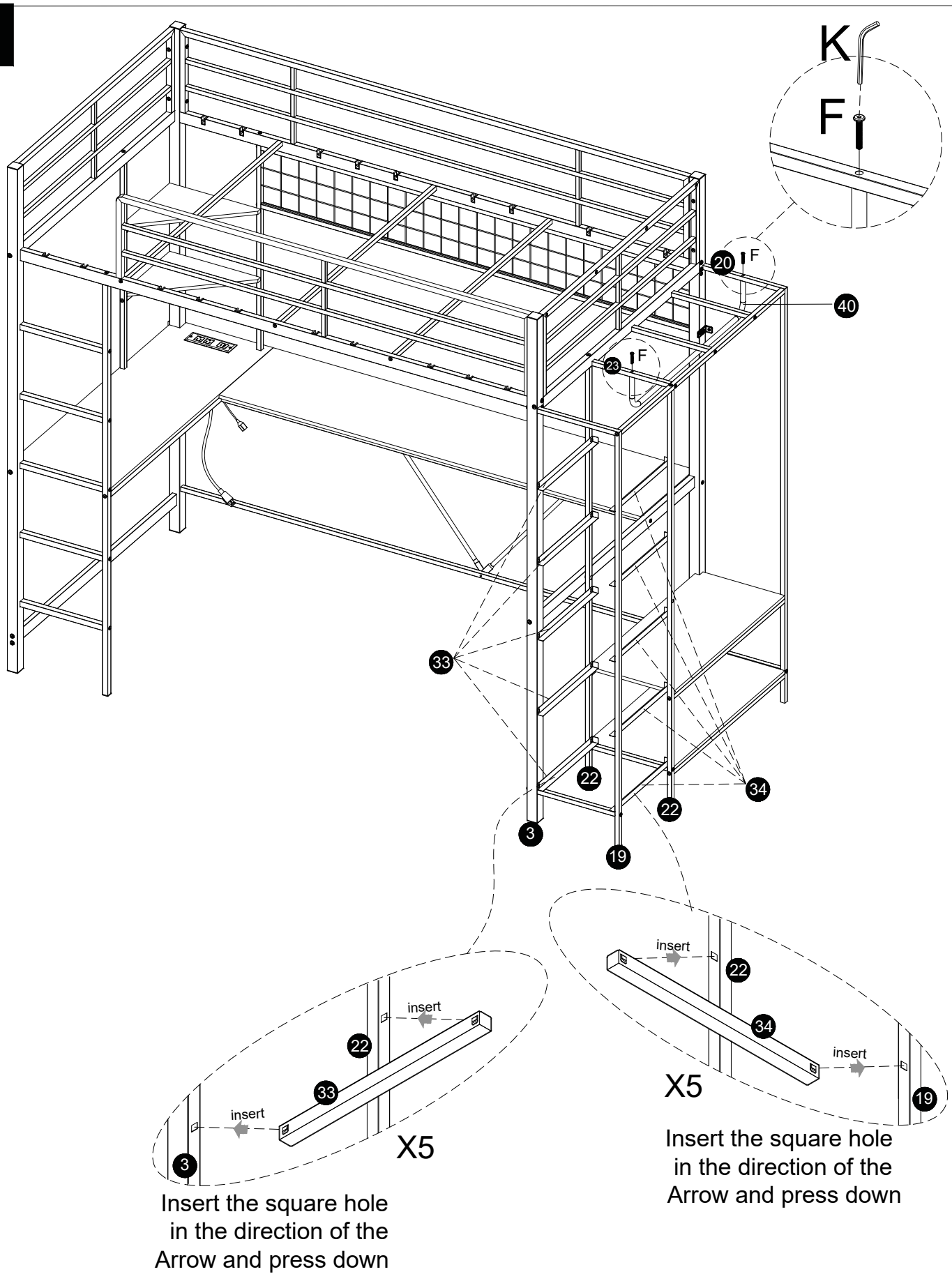

Insert the square hole in the direction of the Arrow and press down

Insert the square hole in the direction of the Arrow and press down

F M6*35 x2



22

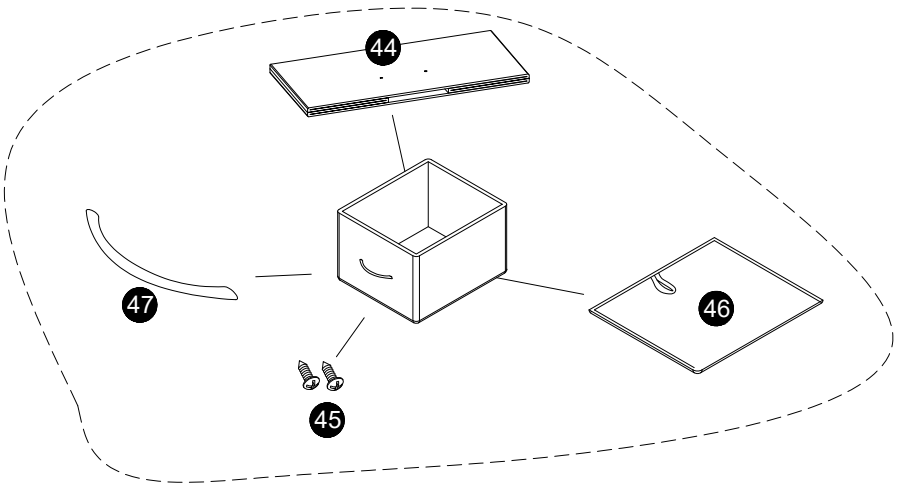

Step:a

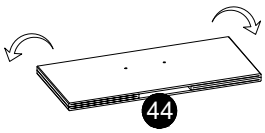

Step:b

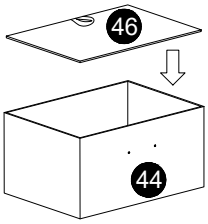

Step:c

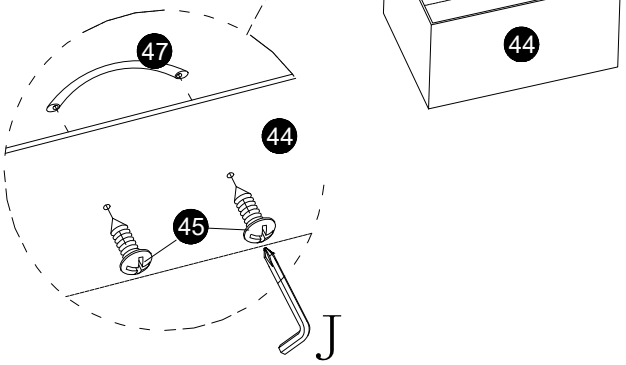

23

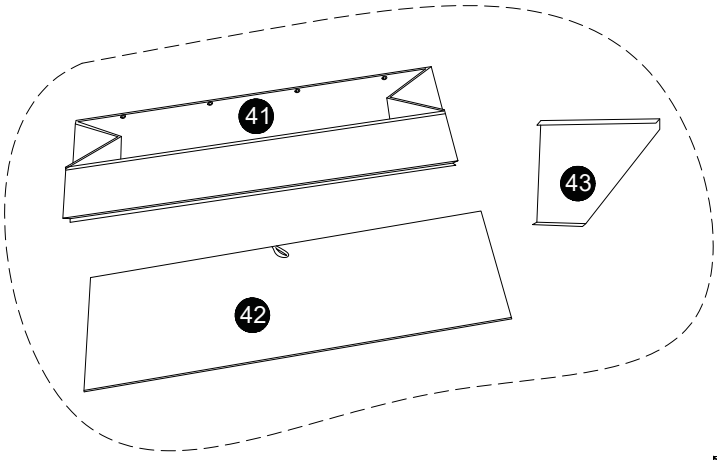

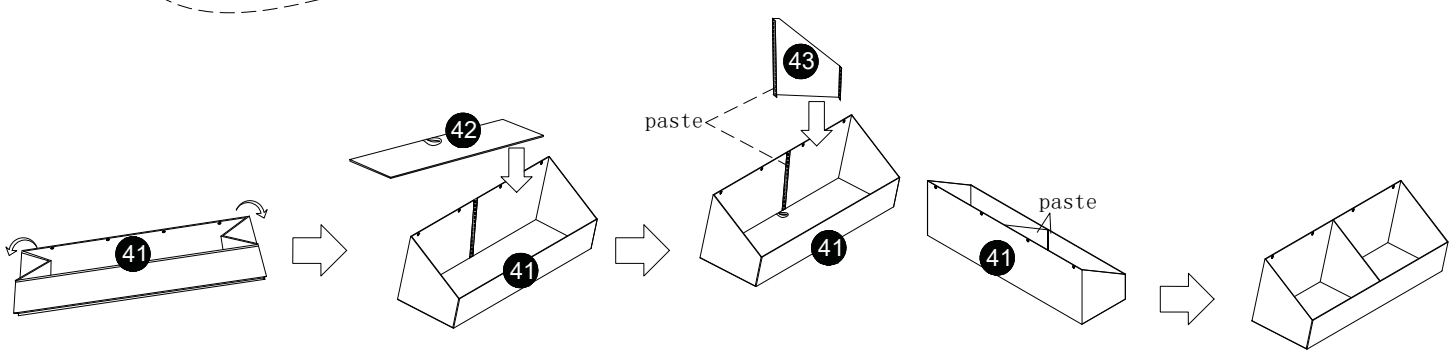

24

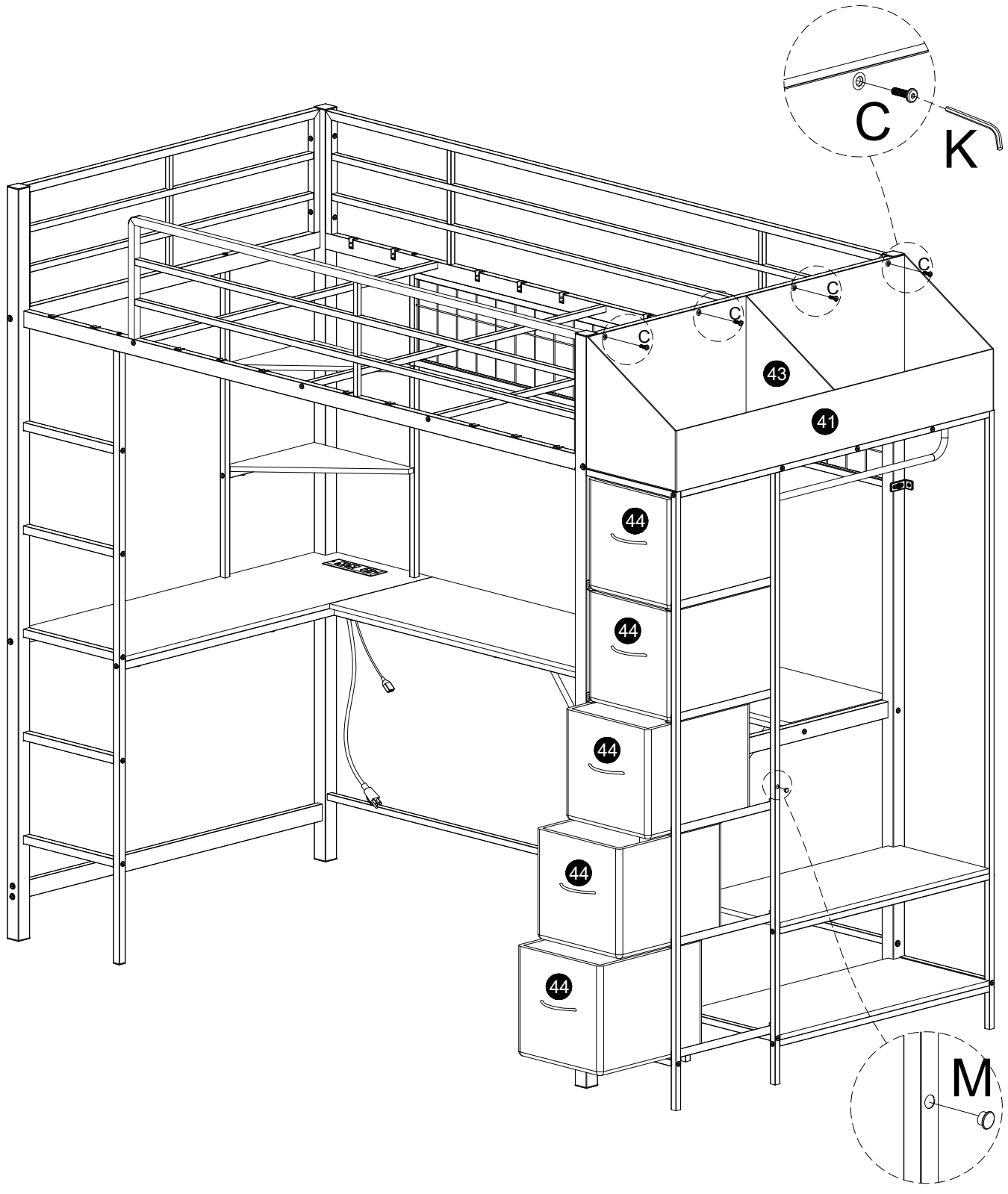

C M6*20	M Ø9
x4	x1

25

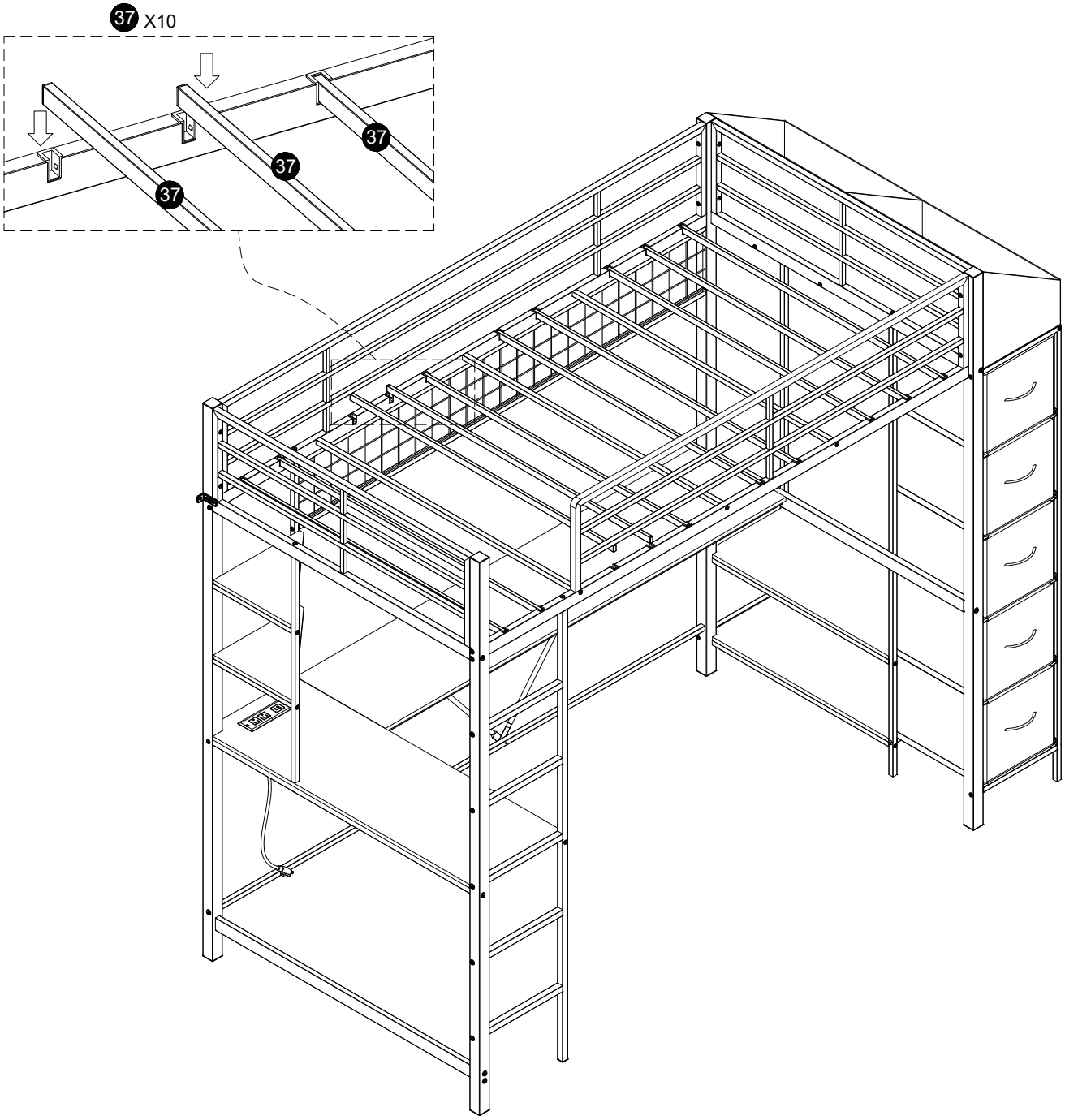

26

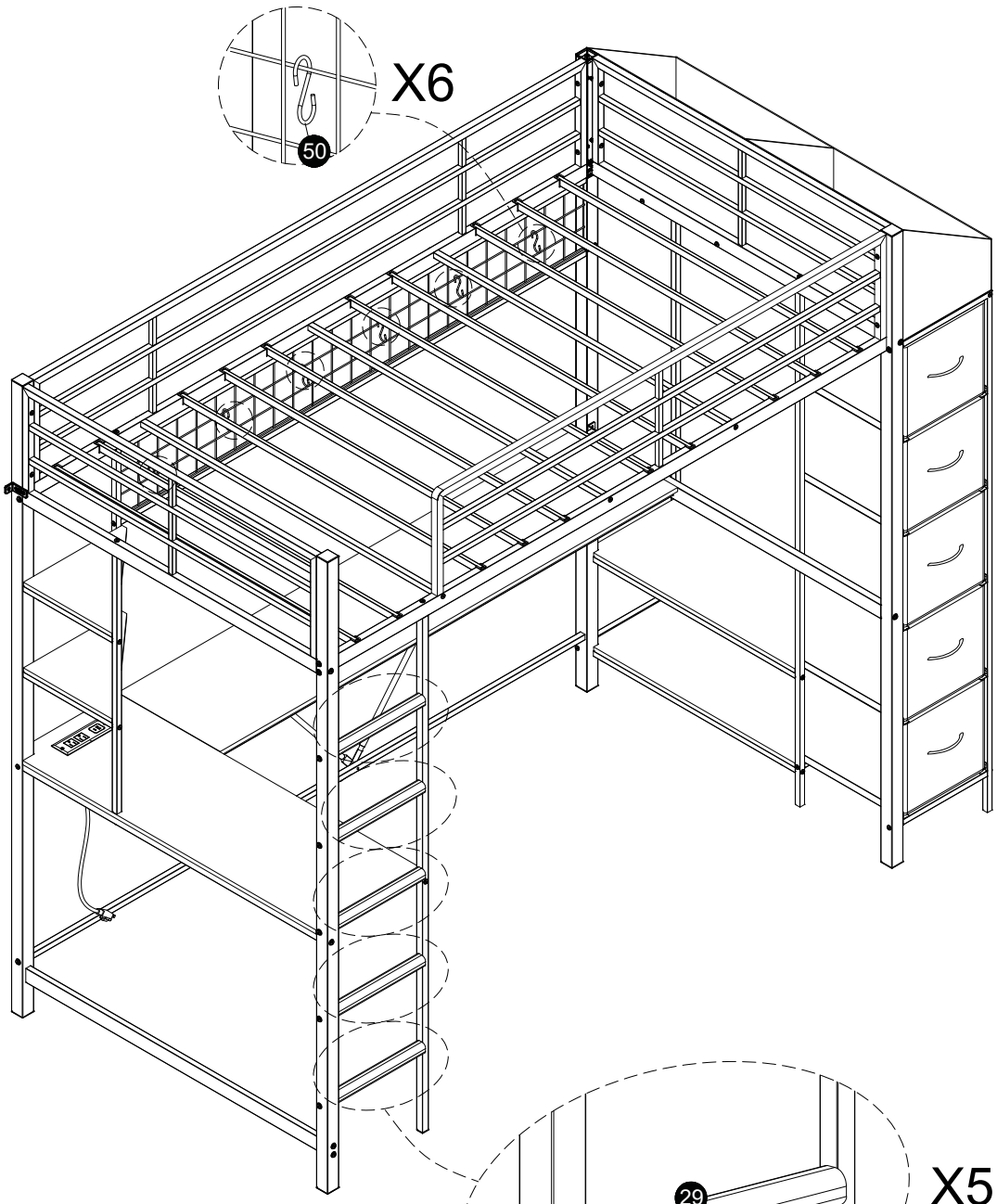

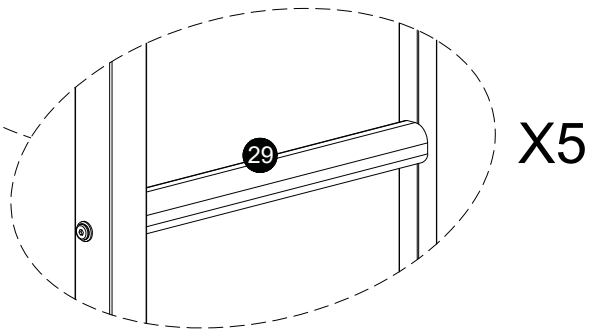

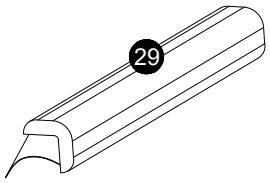

After tearing the tape off the sponge, attach the sponge to the stair tube

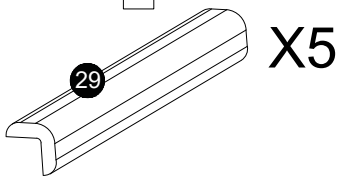

27

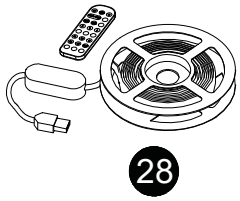

28

Tear off the end of the tape .Stick it in the position as shown



Light Belt

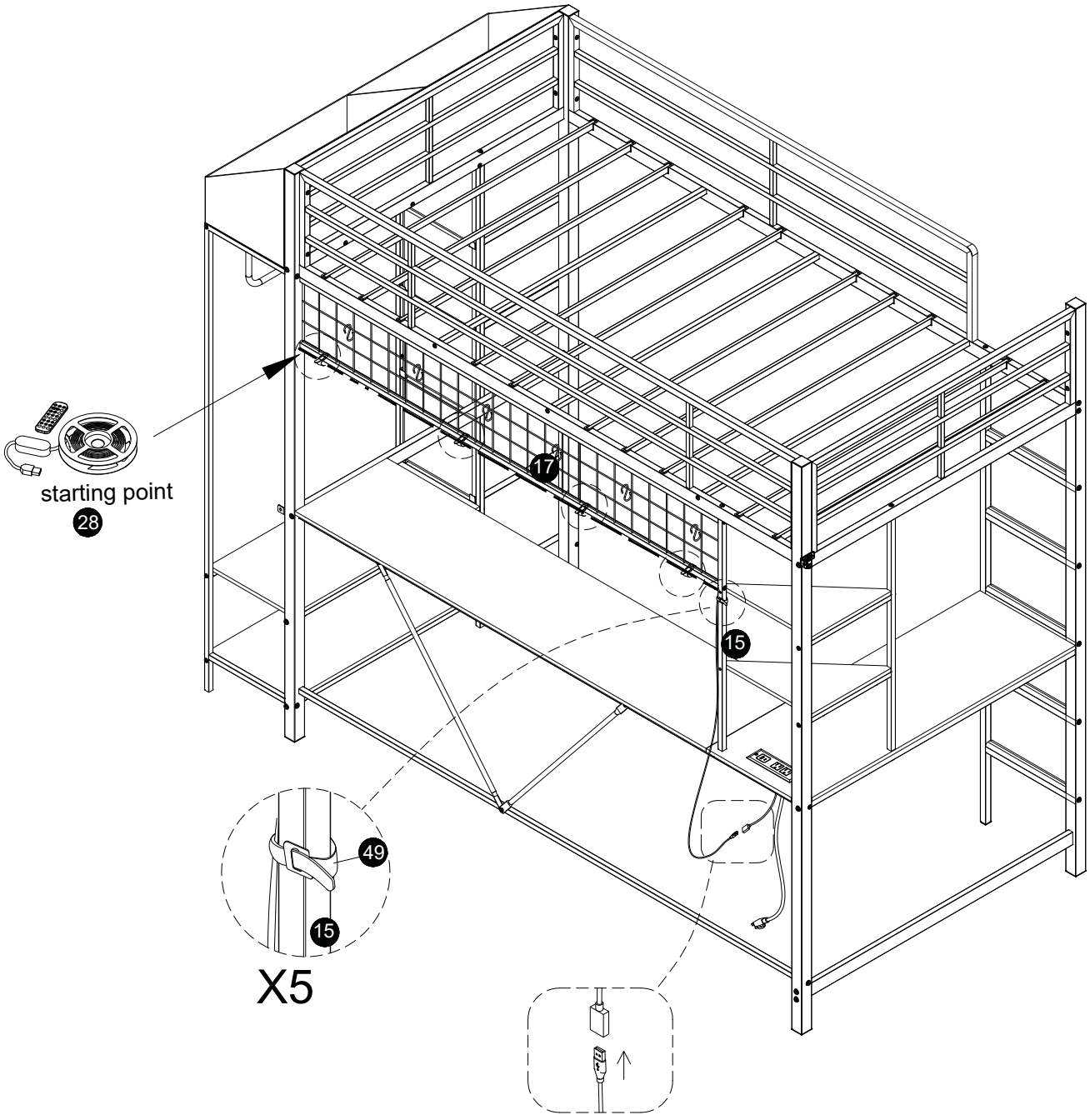

28 Positioning

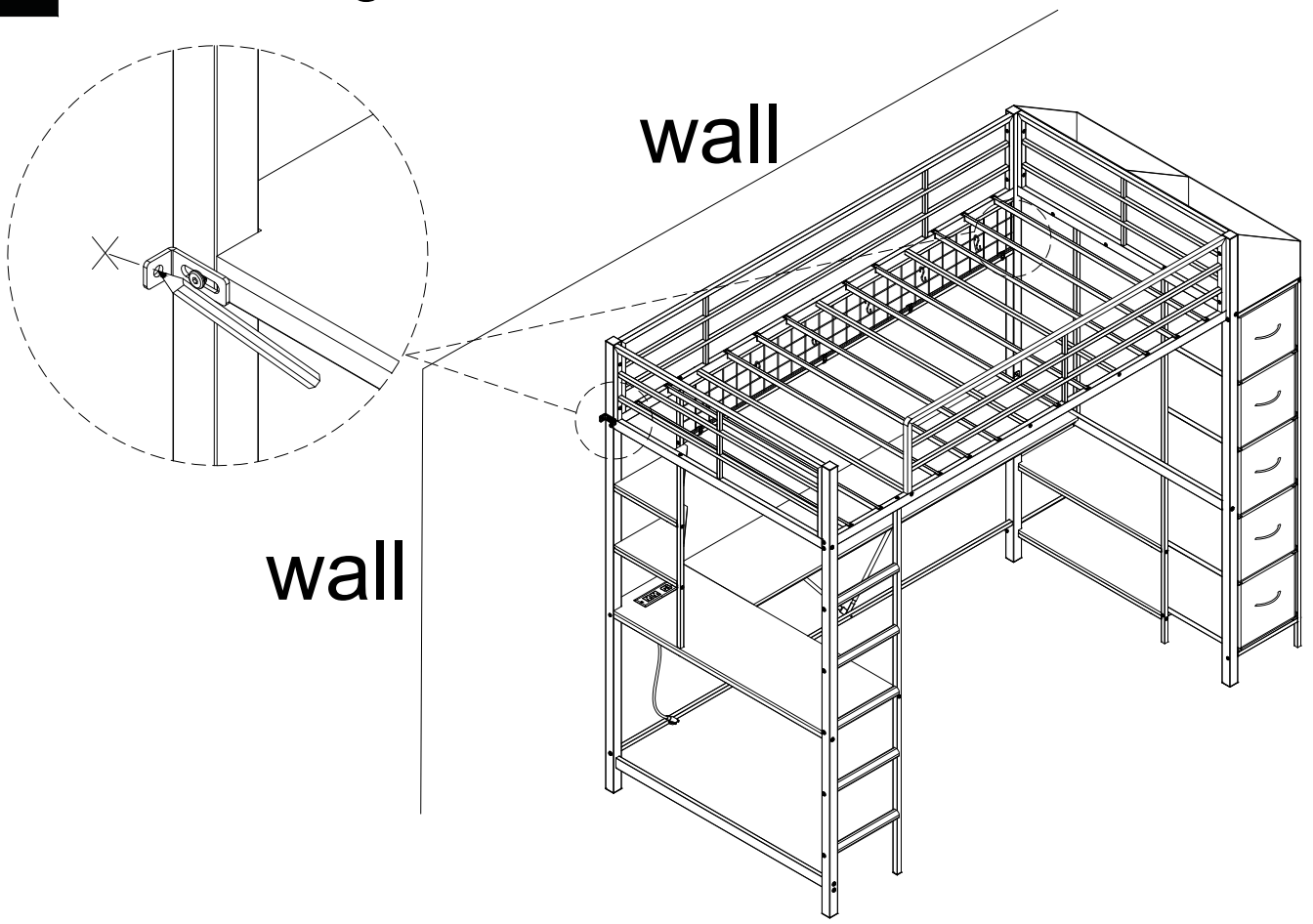

29 Drilling

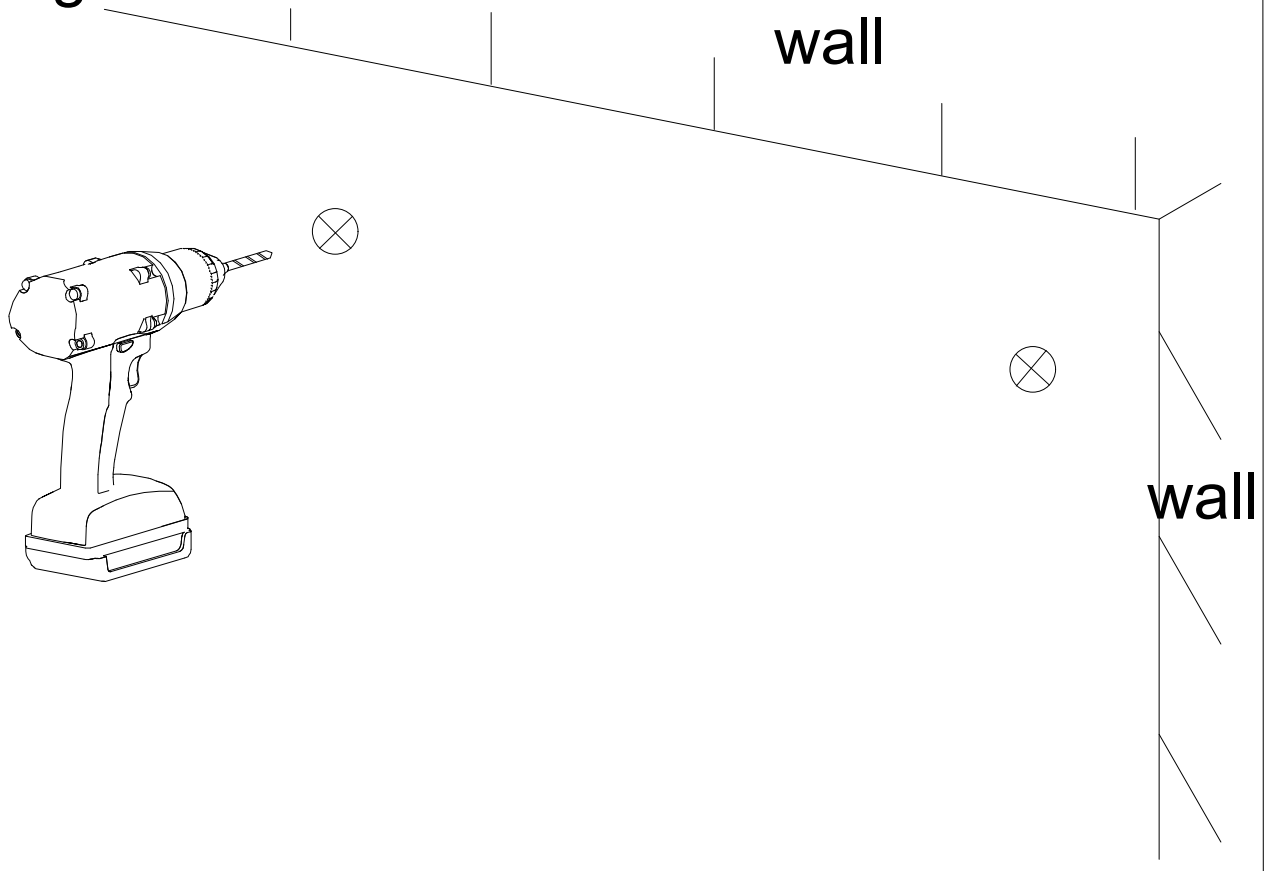

30

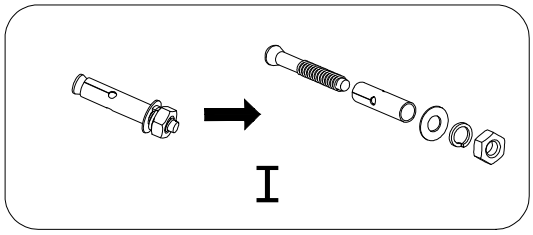

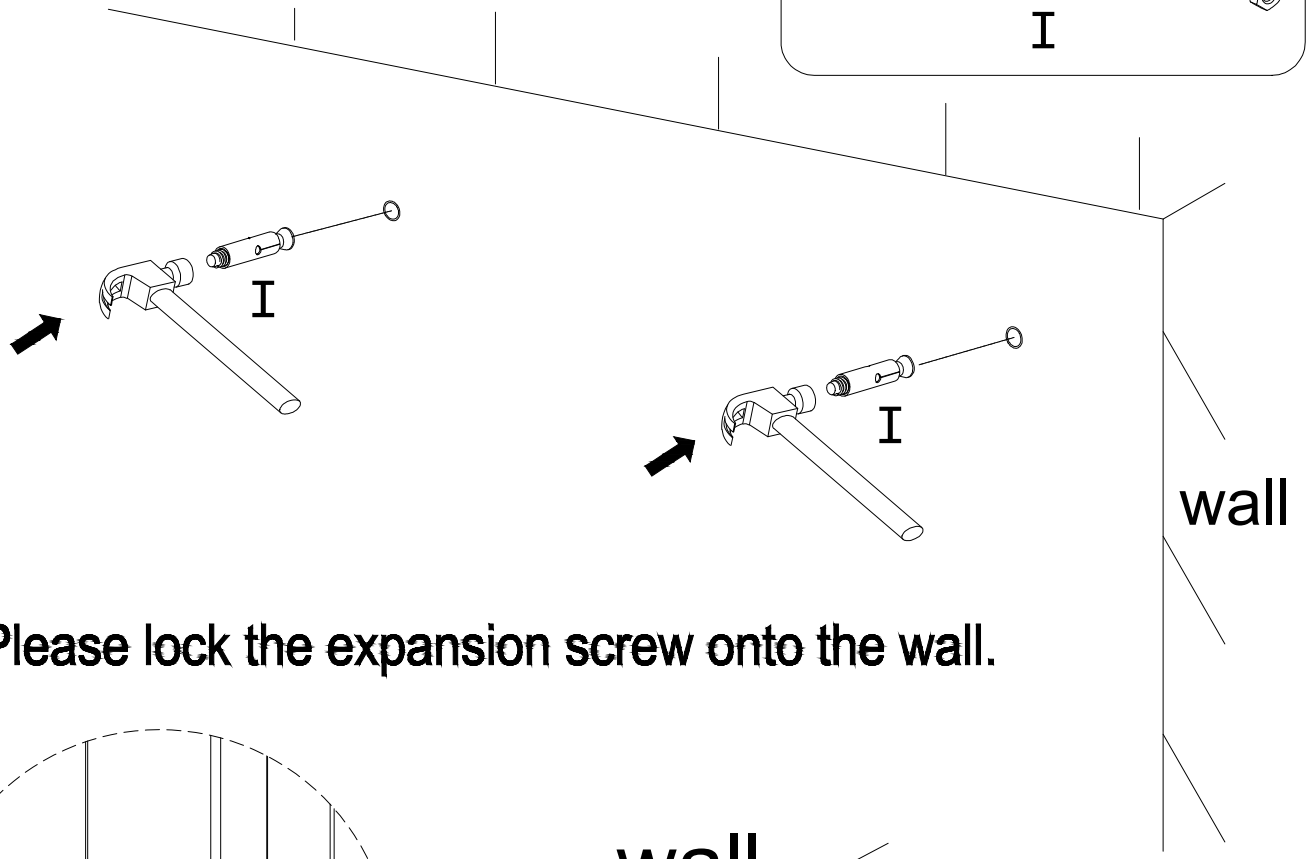

Please lock the expansion screw onto the wall.

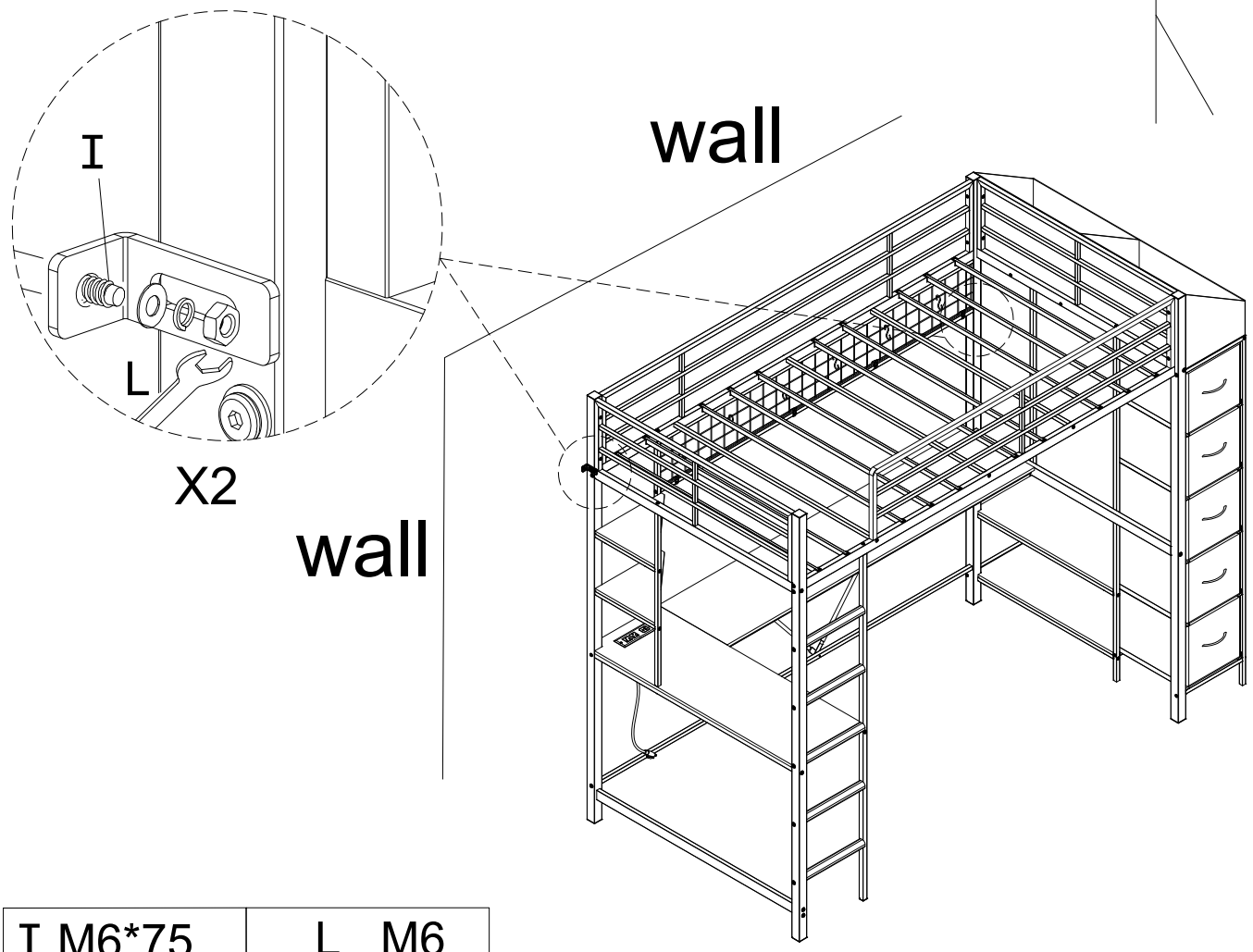

I M6*75 X2	L M6 X1