SS14101OR

Hydraulic Lift Cart

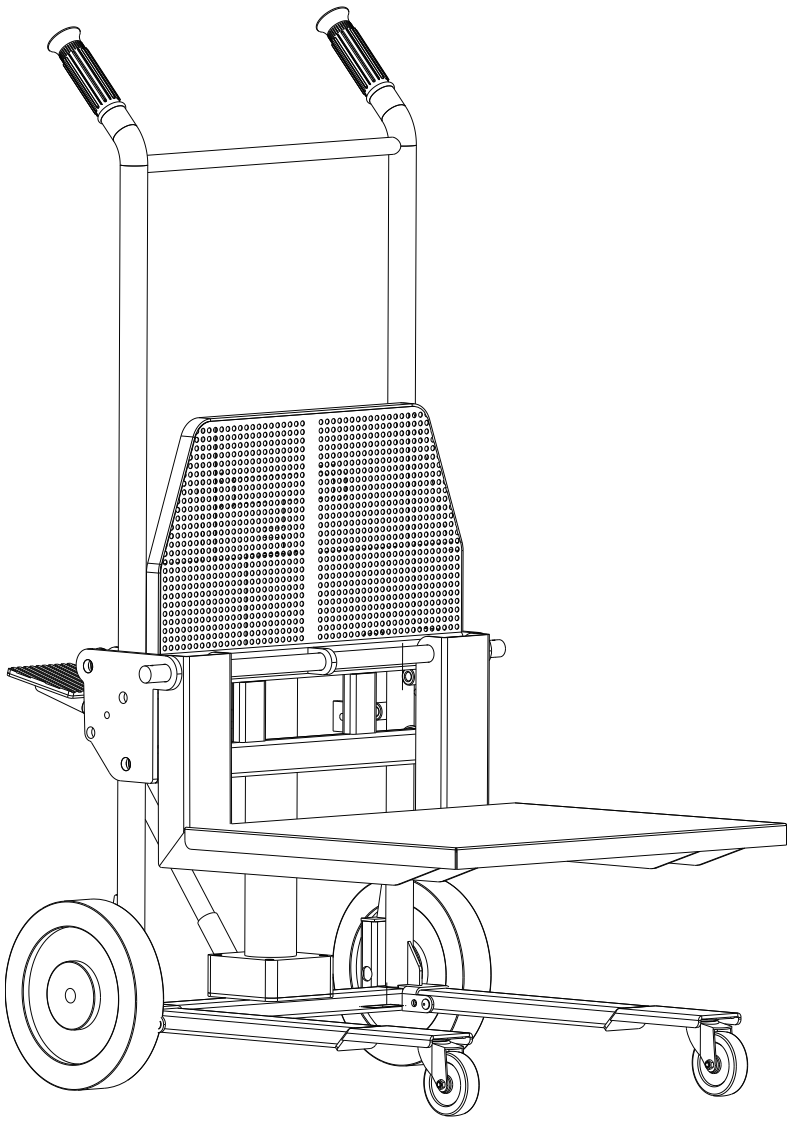

⚠ CAUTION
An assistant is required

If there is any problem, please feel free to contact our customer service team and we are always here to assist with you!

If there is any slight dent or damage, you can try to fix it by pliers or hammers or contact us.

Item no. Nr. N° d'article Articolo No. Artículo No.	Reference Image Referenzbild Image de référence Immagine di riferimento Imagen de referencia	Qty. Menge Qté. Qtà Cant.
1	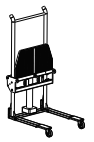	X1
2	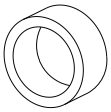	X2
3	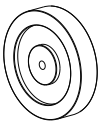	X2
4		X1
5		X1
6		X2
7	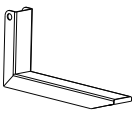	X2
8	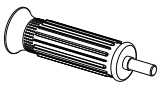	X2
9	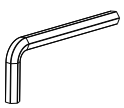	X1
10		X1

Item no. Nr. N° d'article Articolo No. Artículo No.	Reference Image Referenzbild Image de référence Immagine di riferimento Imagen de referencia	Qty. Menge Qté. Qtà Cant.
A	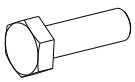	X2
B	X150 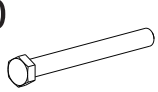	X2
C	X65 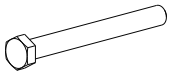	X2
D	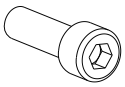	X1
E	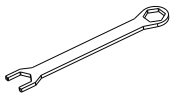	X1

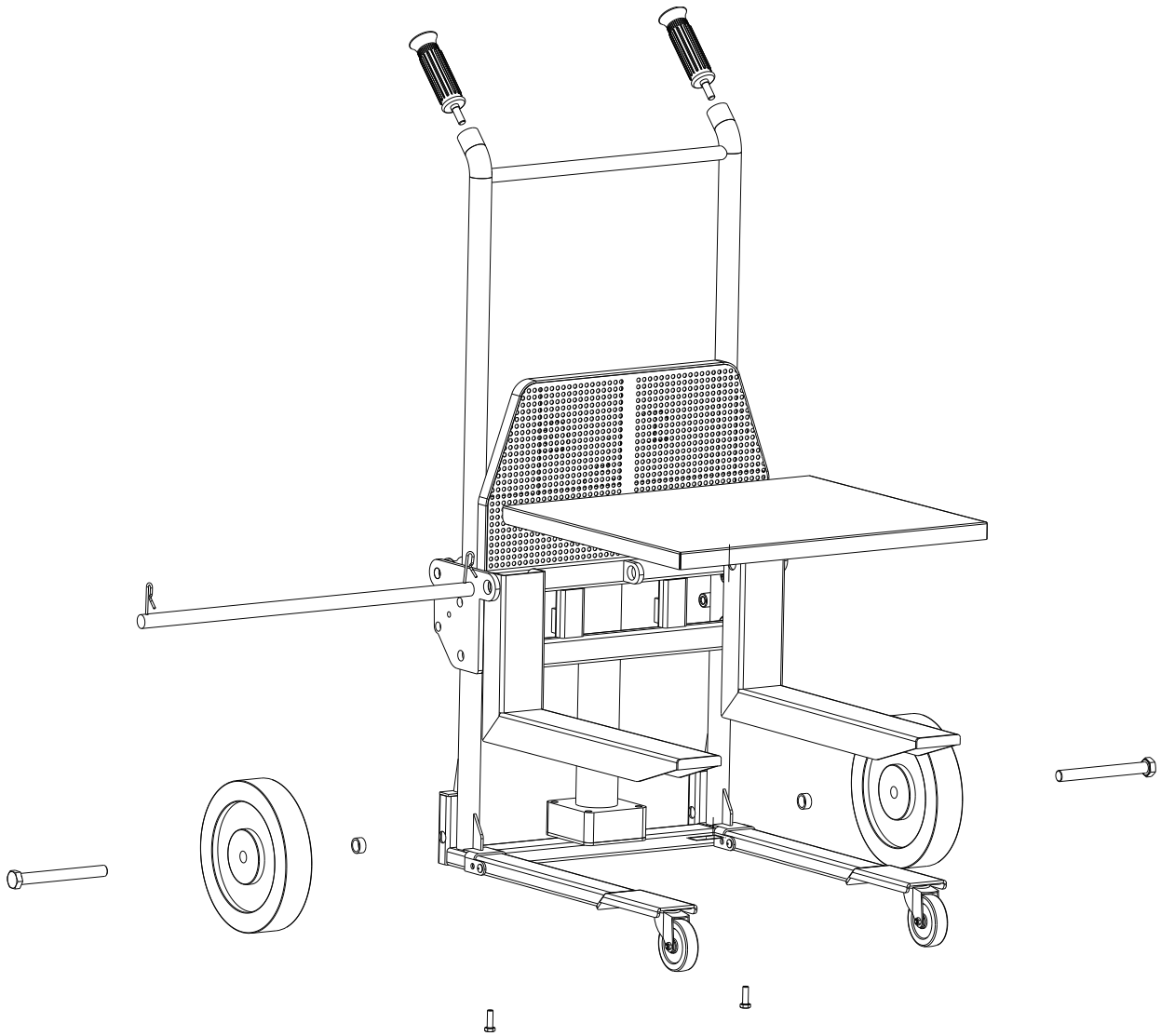

ASSEMBLY INSTRUCTIONS

1



Ⓒ2pcs　①1pcs　Ⓔ1pcs

Do not tighten all the screws until completing step 4.

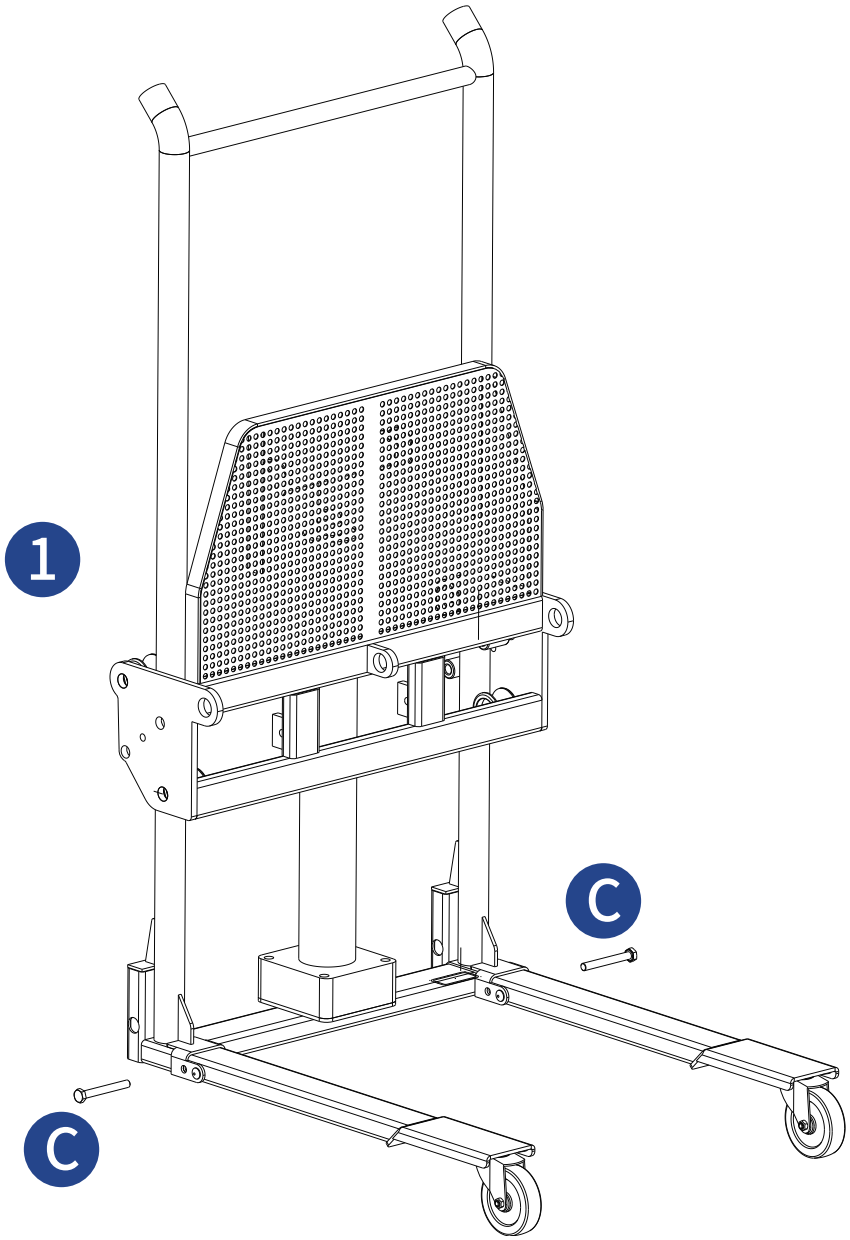

ASSEMBLY INSTRUCTIONS

2

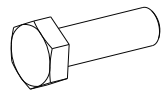

Ⓐ2pcs

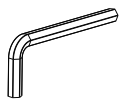

⑨1pcs

The three holes on part #2 should face inward during assembly as seen in the picture below. Do not tighten all the screws until completing step 4.

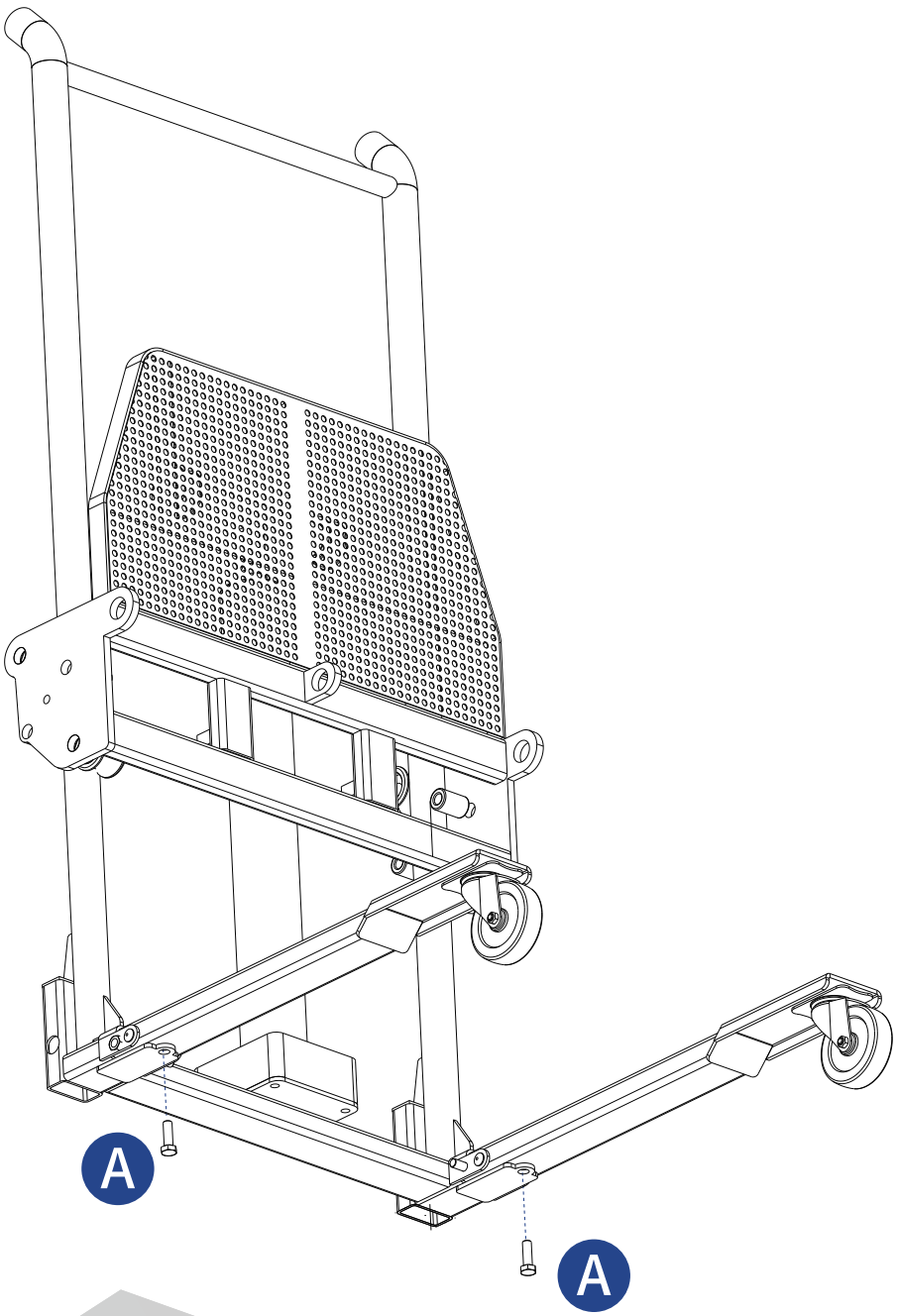

ASSEMBLY INSTRUCTIONS

3

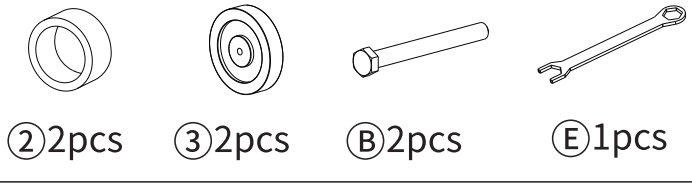

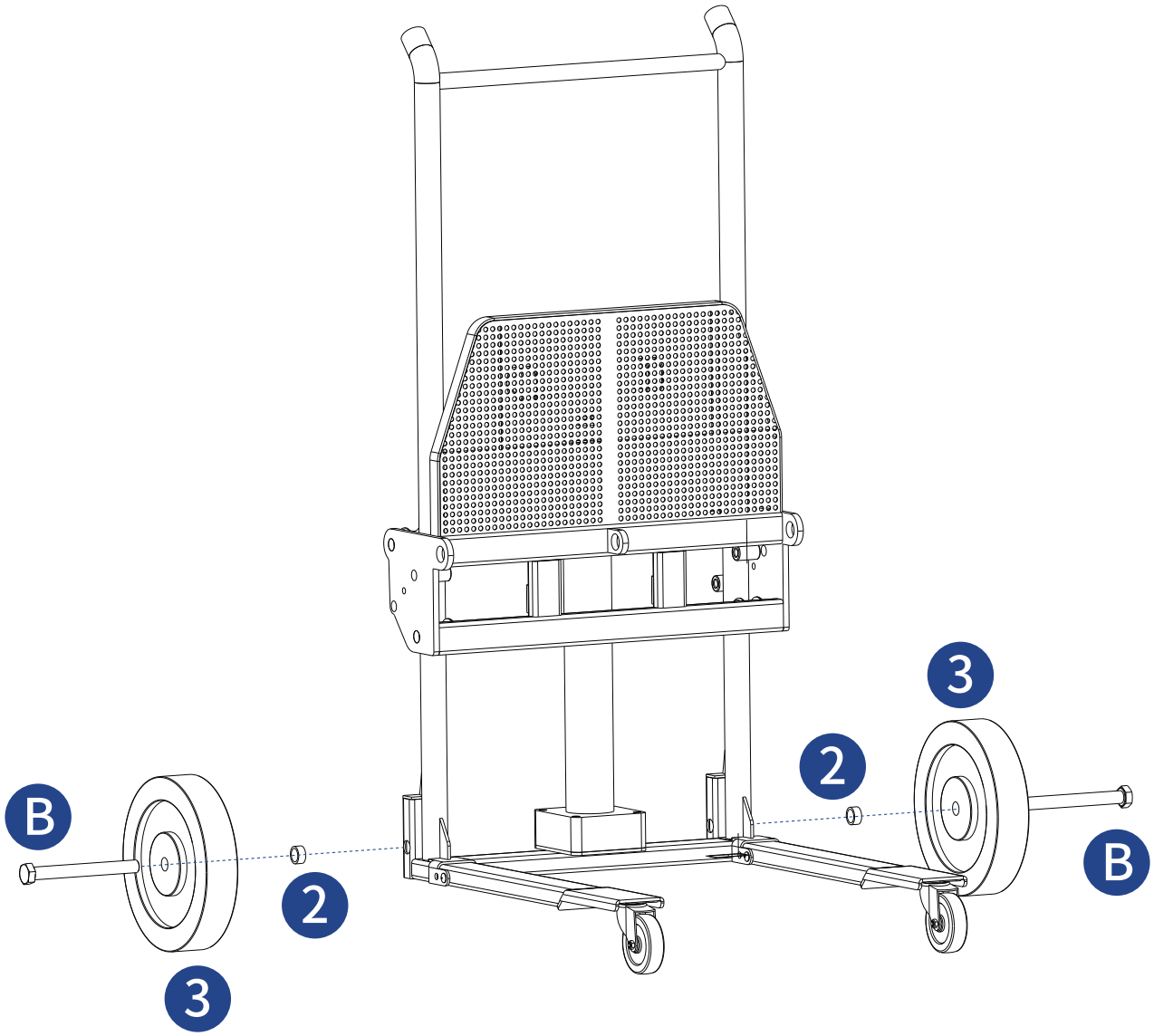

ASSEMBLY INSTRUCTIONS

4

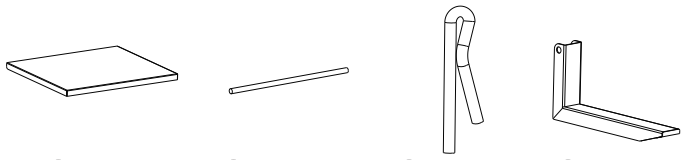

④1pcs ⑤1pcs ⑥2pcs ⑦2pcs

Tighten all the screws.

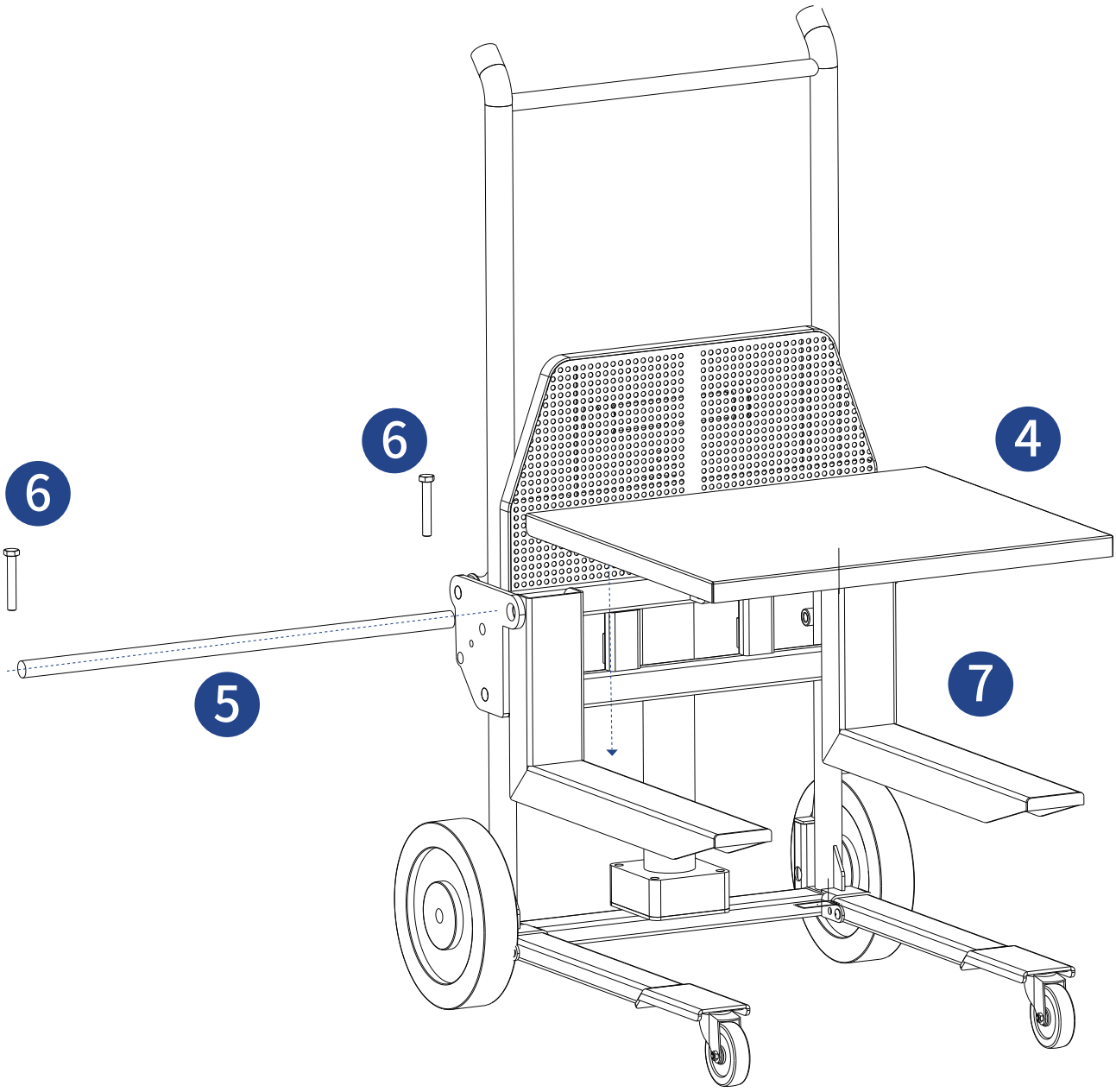

ASSEMBLY INSTRUCTIONS

5

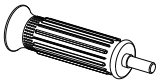

⑧2pcs

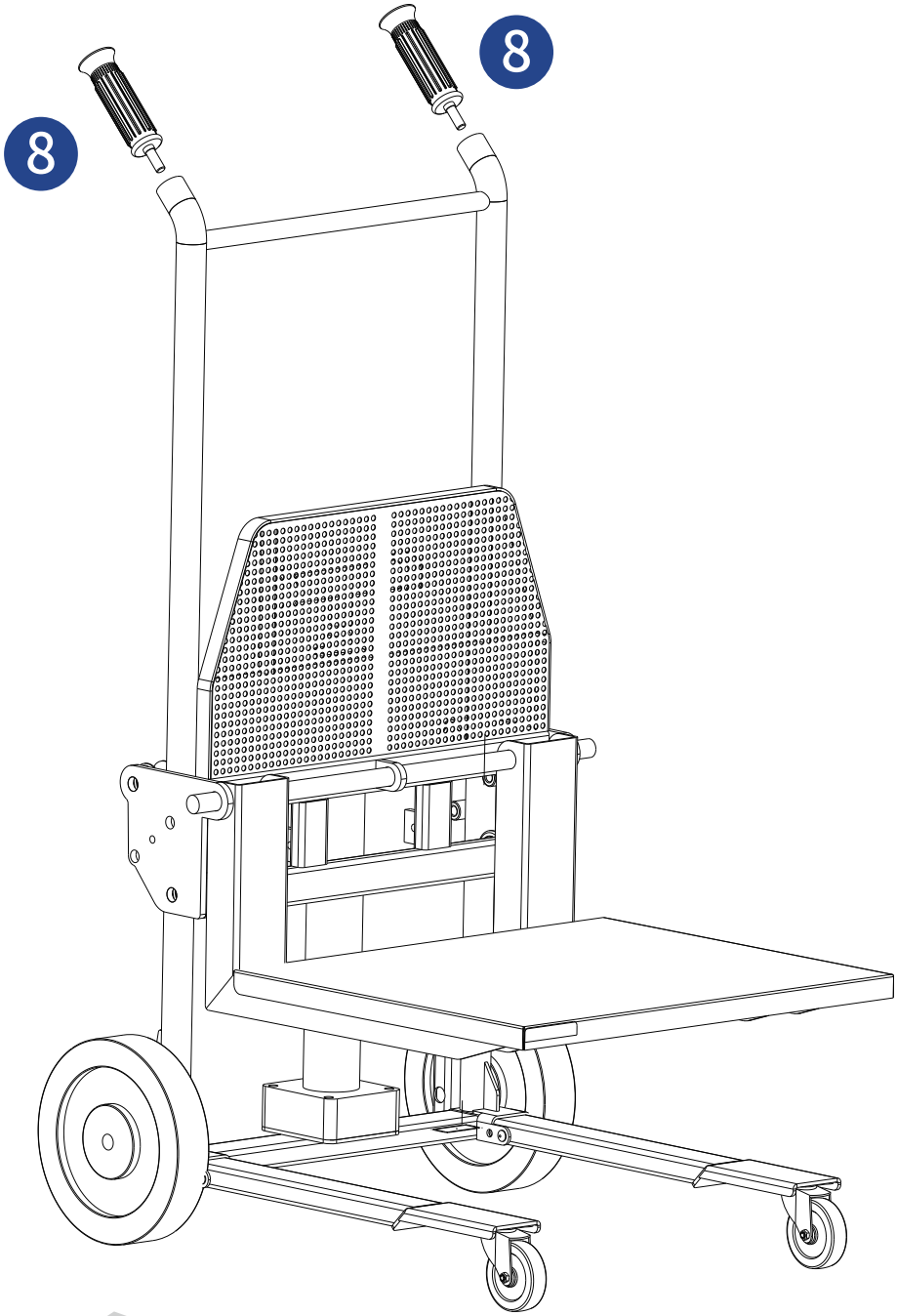

ASSEMBLY INSTRUCTIONS

6

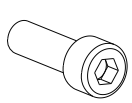
Ⓓ1pcs

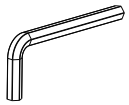
⑨1pcs


⑩1pcs

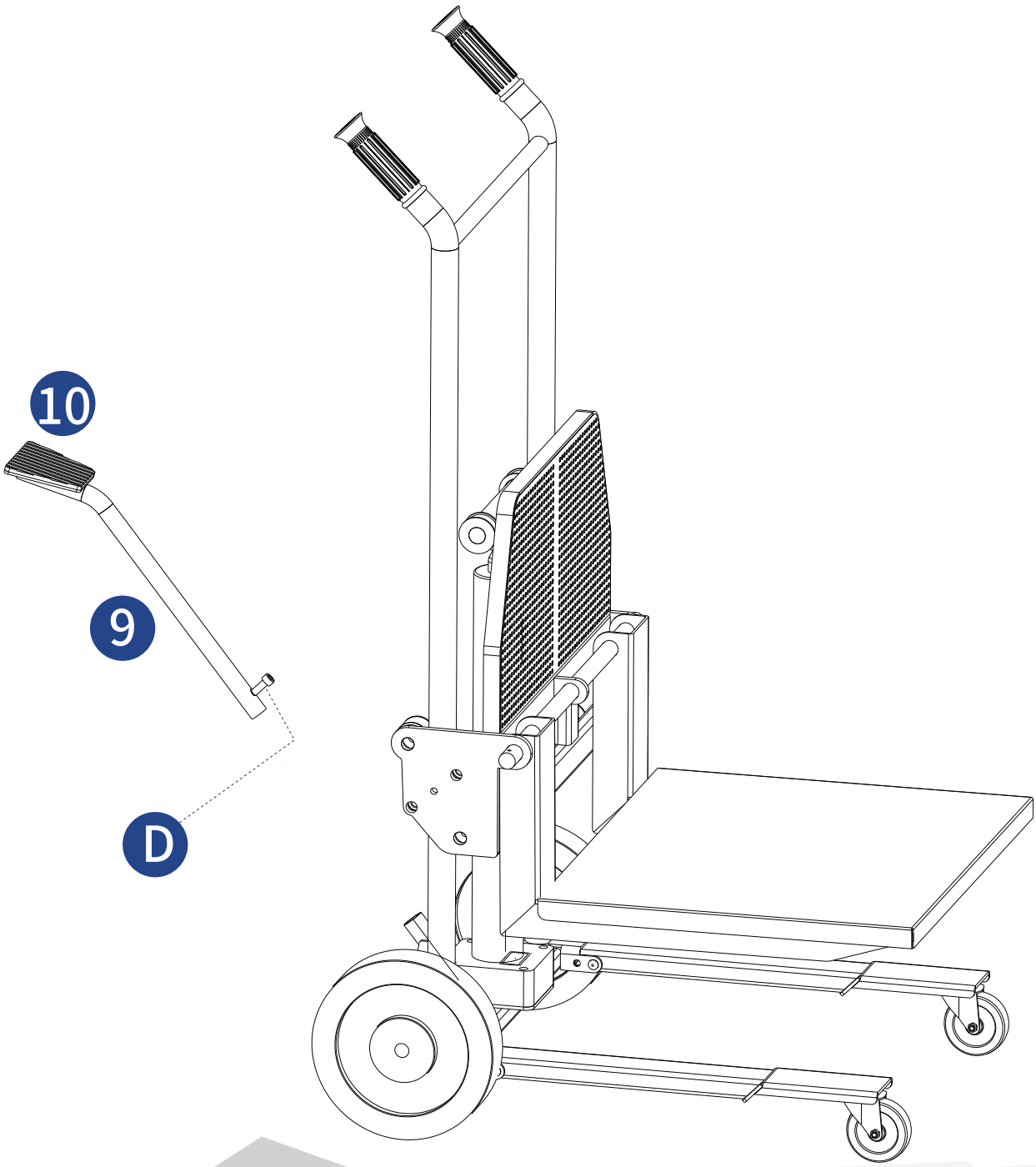

ASSEMBLY INSTRUCTIONS

