MANUFACTURED BY:
Backyard Discovery
3305 Airport Drive, Pittsburg, KS 66762
800-856-4445

Basepoint Business Centre: Rivermead Drive,Westlea, Swindon SN5 7EX Phone: 0800-118-2476
J.P. Coenstraat 7, The Bridge, The Hague, 2595 WP, Netherlands Phone: 0800-567-8990

SKYFORT WITH TUBE SLIDE

Swing Set
Model # 2001015

The assembly manual must be retained
since it contains important information

0-3

WARNING
Adult Assembly Required.
Not suitable for children under 36 months due to small parts.
FOR DOMESTIC USE ONLY. INTENDED FOR OUTDOOR USE.

Please visit www.backyarddiscovery.com

For the most up to date assembly manual, to register your set, or to order replacement parts
Para obtener instrucciones en español, visite www.backyarddiscovery.com

BILT.
EASY STEP-BY-STEP
3D INTERACTIVE INSTRUCTIONS
DOWNLOAD THE FREE APP
Download on the App Store
Get it on Google play

Made in China
INS-2001015-A-SKYFORT WITH TUBE SLIDE-ENG 08-30-23

Place the set on level ground, not less than 6'-7" [2 m] from any structure or obstruction such as a fence, garage, house, overhanging branches, laundry lines, or electrical wires.

- While assembling unit, take time before and after each phase to make sure fort is level. If fort is not level, assembly will be difficult and improper assembly may result. Extra care must be taken to insure the fort is square.
- The safe play area refers to a zone extending 6'-7" (2m) beyond the play product on all sides, including the space above the play product.

SAFE PLAY AREA DIAGRAM

Ground Dimension

EXAMPLE: 16' - 6 1/4" (5m) x 7' - 5 1/4" (2.3m) x 7' - 10" (2.4m)

Safe Play Area

EXAMPLE: 28' - 4 3/4" x 19' - 5 1/4"

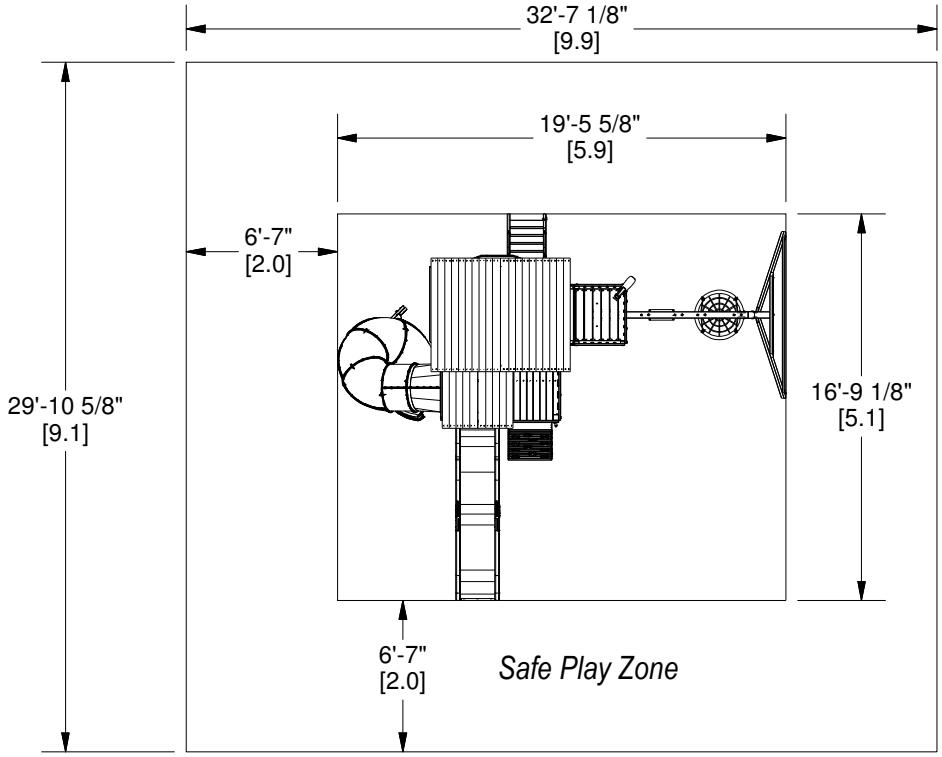

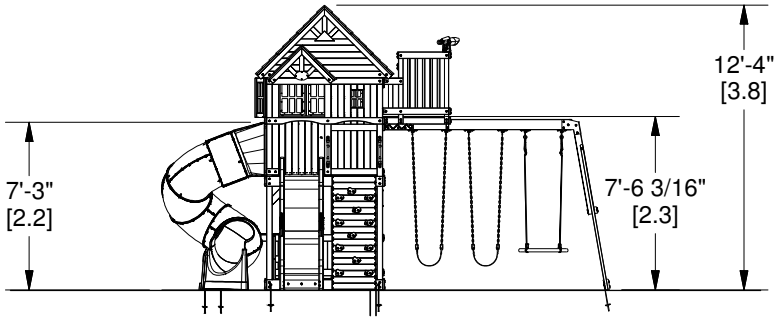

Safe play height: 18'-11" [5.8 m]
Maximum fall height: 7'-6 3/16" [2.3 m]

General Information:

Your set has been designed and engineered for children only and for residential use only.
A maximum of 150 lbs. per child is recommended for play activities designed for individual use.
A maximum of 120 lbs. per child is recommended for play activities designed for multiple child use.
A maximum of 9 children is recommended for this swing set.

Wood Components (Not to Scale)

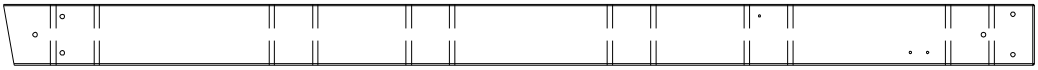

A1 (1) | **SWING BEAM - W4L12789**
3 3/8"x5 1/4"x89 1/2" (86x134x2274)

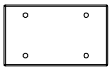

A2 (1) | **SB 9" BLOCK - W4L12790**
3 3/8"x5 1/4"x9" (86x134x228)

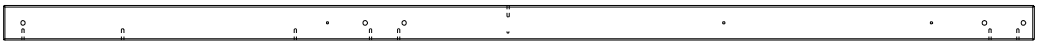

B1 (1) | **TOWER LEG - W4L12680**
3"x3"x89 1/2" (76x76x2274)

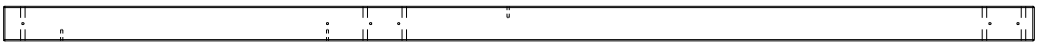

B2 (1) | **TOWER LEG - W4L12681**
3"x3"x89 1/2" (76x76x2274)

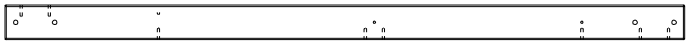

B3 (1) | **TOWER LEG - W4L12682**
3"x3"x59" (76x76x1500)

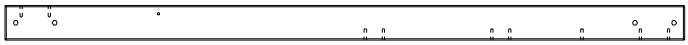

B4 (1) | **TOWER LEG - W4L12683**
3"x3"x59" (76x76x1500)

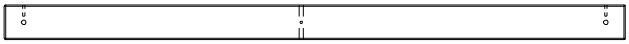

B5 (1) | **BACK LEFT FORT CORNER - W4L12684**
3"x3"x53 7/8" (76x76x1370)

B6 (1) | **FRONT LEFT FORT CORNER - W4L12685**
3"x3"x53 7/8" (76x76x1370)

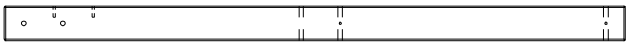

B7 (1) | **FRONT RIGHT FORT CORNER - W4L12686**
3"x3"x53 7/8" (76x76x1370)

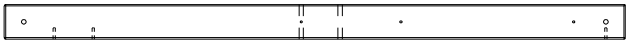

B8 (1) | **BACK RIGHT FORT CORNER - W4L12687**
3"x3"x53 7/8" (76x76x1370)

E1 (1) | **TOWER LEG - W4L12688**
1 3/8"x3 3/8"x59" (36x86x1500)

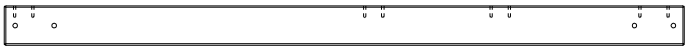

E2 (1) | **TOWER LEG - W4L12689**
1 3/8"x3 3/8"x59" (36x86x1500)

E3 (2) | **CROWS NEST FLOOR RAIL - W4L12690**
1 3/8"x3 3/8"x33 1/2" (36x86x852)

E4 (2) | **ANGLE BRACE - W4L13302**
1 3/8"x3 3/8"x87 1/8" (36x86x2212)

E5 (8) | **DECK BRACE - W4L12692**
1 7/16"x3 3/8"x20" (36x86x508)

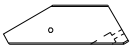

E6 (2) | **CROWS NEST DECK BRACE - W4L12691**
1 7/16"x3 3/8"x10 7/8" (36x86x276)

Wood Components (Not to Scale)

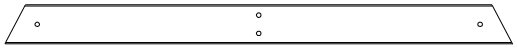

E50 (1) | **END SUPPORT - W4L08131**
1 3/8"x3 3/8"x44 1/8" (36x86x1120)

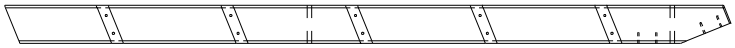

E77 (1) | **LEFT UPRIGHT - W4L12693**
1 3/8"x3 3/8"x64 3/8" (36x86x1634)

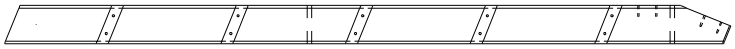

E78 (1) | **RIGHT UPRIGHT - W4L12694**
1 3/8"x3 3/8"x64 3/8" (36x86x1634)

F1 (1) | **TELESCOPE MOUNTING BLOCK - W4L12695**
1 3/8"x2 3/8"x3" (36x60x76)

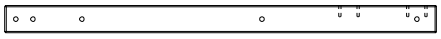

F2 (2) | **CROWS NEST WALL SUPPORT - W4L12696**
1 3/8"x2 3/8"x37 1/2" (36x60x952)

F3 (2) | **CROWS NEST WALL SUPPORT - W4L12697**
1 3/8"x2 3/8"x37 1/2" (36x60x952)

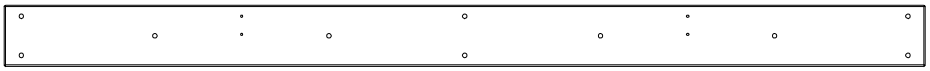

G1 (1) | **TOP FLOOR RAIL - W4L12698**
1"x5 1/4"x80" (24x134x2032)

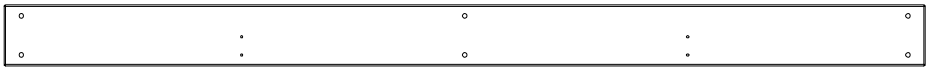

G2 (1) | **TOP FLOOR RAIL - W4L12699**
1"x5 1/4"x80" (24x134x2032)

G3 (1) | **FLOOR RAIL - W4L12700**
1"x5 1/4"x60 1/2" (24x134x1537)

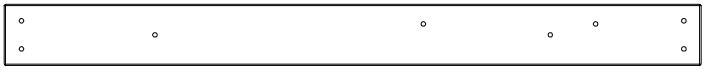

G4 (1) | **FLOOR RAIL - W4L12701**
1"x5 1/4"x60 1/2" (24x134x1537)

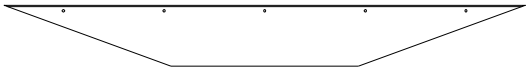

G5 (4) | **BAY WINDOW HEADER - W4L12702**
1"x5 1/4"x45 1/4" (24x134x1150)

G6 (1) | **FLOOR RAIL - W4L12703**
1"x5 1/4"x60 1/2" (24x134x1537)

Wood Components (Not to Scale)

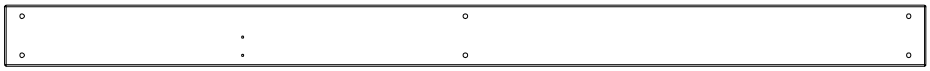

G7 (2) | **BOTTOM FLOOR RAIL - W4L12704**
1"x5 1/4"x80" (24x134x2032)

G8 (1) | **GROUND BOARD - W4L08134**
1"x5 1/4"x86 3/4" (24x134x2202)

H1 (1) | **WALL RAIL - W4L12706**
1"x3 3/8"x80" (24x86x2032)

H2 (1) | **WALL RAIL - W4L12707**
1"x3 3/8"x80" (24x86x2032)

H3 (1) | **PICNIC TABLE RAIL - W4L12708**
1"x3 3/8"x67 1/4" (24x86x1708)

H4 (2) | **ROOF SUPPORT RAIL - W4L12709**
1"x3 3/8"x67 1/4" (24x86x1709)

H5 (1) | **FLOOR RAIL - W4L12710**
1"x3 3/8"x60 1/2" (24x86x1537)

H6 (1) | **BACK FORT RAIL - W4L12711**
1"x3 3/8"x60 1/2" (24x86x1537)

H7 (1) | **FRONT FORT WALL RAIL - W4L12712**
1"x3 3/8"x60 1/2" (24x86x1537)

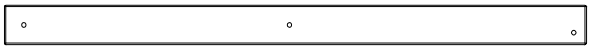

H8 (1) | **FORT UPRIGHT - W4L12713**
1"x3 3/8"x50 1/2" (24x86x1284)

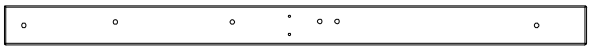

H9 (2) | **FORT WALL BOARD - W4L12714**
1"x3 3/8"x50 1/2" (24x86x1284)

H10 (1) | **PORCH LEG - W4L12715**
1"x3 3/8"x50 1/2" (24x86x1282)

H11 (1) | **PORCH LEG - W4L12716**
1"x3 3/8"x50 1/2" (24x86x1282)

Wood Components (Not to Scale)

H12 (4) | **ROOF RAFTER - W4L12717**
1"x3 3/8"x50 3/8" (24x86x1278)

H13 (1) | **FORT WALL RAIL - W4L12718**
1"x3 3/8"x50 1/4" (24x86x1277)

H14 (1) | **SWING BEAM MOUNT - W4L12719**
1"x3 3/8"x50 1/4" (24x86x1277)

H15 (2) | **PICNIC TABLE SEAT - W4L12720**
1"x3 3/8"x35 3/8" (24x86x897)

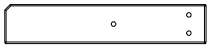

H16 (1) | **PICNIC TABLE SEAT RAIL - W4L12721**
1"x3 3/8"x17 1/2" (24x86x444)

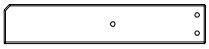

H17 (1) | **PICNIC TABLE SEAT RAIL - W4L12722**
1"x3 3/8"x17 1/2" (24x86x444)

H18 (1) | **FORT WALL RAIL - W4L12723**
1"x3 3/8"x29 7/8" (24x86x758)

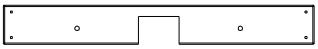

H19 (1) | **CROWS NEST FLOOR RAIL - W4L12724**
1"x3 3/8"x27" (24x86x686)

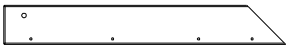

H20 (4) | **PORCH ROOF RAFTER - W4L12725**
1"x3 3/8"x24 1/2" (24x86x622)

H21 (1) | **CROWS NEST FLOOR SUPPORT - W4L12726**
1"x3 3/8"x24 1/8" (24x86x614)

H22 (1) | **SLIDE ATTACHMENT BOARD - W4L12781**
1"x3"x23" (24x76x585)

H23 (1) | **FORT WALL RAIL - W4L12752**
1"x3 3/8"x50 1/4" (24x86x1277)

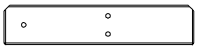

H24 (1) | **PICNIC TABLE TOP SUPPORT - W4L12727**
1"x3 3/8"x16 1/2" (24x86x418)

H25 (2) | **TOP FLOOR SUPPORT - W4L12728**
1"x3 3/8"x3" (24x86x76)

H26 (3) | **FLOOR JOIST - W4L12729**
1"x3 3/8"x60 1/2" (24x86x1537)

Wood Components (Not to Scale)

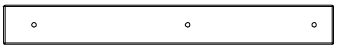

H27 (1) | **PICNIC TABLE SUPPORT - W4L12730**
1"x3 3/8"x28 5/8" (24x86x728)

H28 (1) | **FRONT WALL RAIL - W4L12731**
1"x3 3/8"x60 1/2" (24x86x1537)

H29 (2) | **CROWS NEST WALL RAIL - W4L12732**
1"x3 3/8"x26 1/4" (24x86x666)

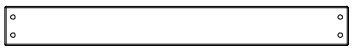

H30 (2) | **CROWS NEST WALL RAIL - W4L12733**
1"x3 3/8"x29 7/8" (24x86x758)

H31 (2) | **CROWS NEST WALL RAIL - W4L12734**
1"x3 3/8"x34 1/2" (24x86x876)

H72 (2) | **ROCKWALL RAIL - W4L12735**
1"x3 3/8"x61 3/4" (24x86x1570)

H76 (5) | **LADDER RUNG - W4L12736**
1"x3 3/8"x18 1/8" (24x86x460)

H77 (1) | **ATTACHMENT BOARD - W4L12737**
1"x3 3/8"x20 1/8" (24x86x512)

H80 (1) | **SLIDE BRACE WIDE - W4L15715**
1"x3 3/8"x18 3/8" (24x86x466)

H81 (2) | **SLIDE BRACE UPRIGHT - W4L13301**
1"x3 3/8"x22 7/8" (24x86x580)

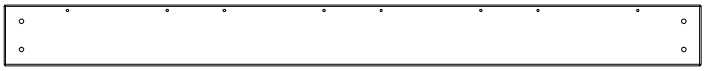

K2 (1) | **FLOOR RAIL - W4L12738**
5/8"x5 1/4"x60 1/2" (16x134x1537)

K3 (1) | **FLOOR RAIL - W4L12739**
5/8"x5 1/4"x60 1/2" (16x134x1537)

K5 (1) | **FORT WALL RAIL - W4L12740**
5/8"x5 1/4"x50 1/4" (16x134x1277)

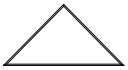

K6 (2) | **TRIANGLE SUNBURST - W4L12741**
5/8"x5 1/4"x10 3/8" (16x134x265)

L1 (6) | **CROWS NEST FLOOR BOARD - W4L12742**
5/8"x4 3/8"x27" (16x112x686)

L2 (2) | **CROWS NEST FLOOR BOARD - W4L12705**
5/8"x4 3/8"x27" (16x112x686)

Wood Components (Not to Scale)

M1 (1) | **TOP WALL RAIL - W4L12743**
5/8"x3 3/8"x80" (16x86x2032)

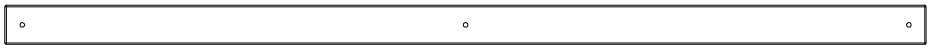

M2 (2) | **BOTTOM WALL RAIL - W4L12744**
5/8"x3 3/8"x80" (16x86x2032)

M3 (1) | **BOTTOM WALL RAIL - W4L12745**
5/8"x3 3/8"x60 1/2" (16x86x1537)

M4 (2) | **CROWS NEST WALL RAIL - W4L12746**
5/8"x3 3/8"x29 7/8" (16x86x758)

M5 (2) | **GABLE BOARD - W4L12747**
5/8"x3 3/8"x59 1/2" (16x86x1510)

M6 (1) | **FORT WALL BOARD - W4L12748**
5/8"x3 3/8"x53 7/8" (16x86x1370)

M7 (2) | **GABLE BOARD - W4L12749**
5/8"x3 3/8"x52 5/8" (16x86x1338)

M8 (7) | **FORT WALL BOARD - W4L12750**
5/8"x3 3/8"x50 1/2" (16x86x1284)

M9 (2) | **FORT WALL BOARD - W4L12751**
5/8"x3"x50 1/2" (16x76x1284)

M10 (1) | **PICNIC TABLE TOP - W4L12793**
5/8"x3 3/8"x41 1/4" (16x86x1049)

M11 (1) | **SOFFIT CAP - W4L12753**
5/8"x3 3/8"x50 1/4" (16x86x1277)

M12 (2) | **GABLE BOARD - W4L12754**
5/8"x3 3/8"x45 7/8" (16x86x1166)

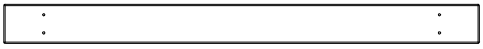

M13 (3) | **PICNIC TABLE TOP - W4L12755**
5/8"x3 3/8"x41 1/4" (16x86x1049)

M14 (2) | **GABLE BOARD - W4L12756**
5/8"x3 3/8"x39 1/8" (16x86x994)

Wood Components (Not to Scale)

M16 (1) | **CENTER PICNIC TABLE TOP - W4L12757**
5/8"x3"x38 1/4" (16x76x973)

M17 (2) | **FRONT WINDOW WALL BOARD - W4L12758**
5/8"x3 3/8"x35" (16x86x889)

M18 (2) | **GABLE BOARD - W4L12759**
5/8"x3 3/8"x32 3/8" (16x86x822)

M19 (1) | **FRONT PORCH ROOF SUPPORT - W4L12760**
5/8"x3 3/8"x30 5/8" (16x86x779)

M21 (3) | **FORT WALL RAIL - W4L12761**
5/8"x3 3/8"x30 1/4" (16x86x768)

M22 (4) | **FORT WALL BOARD - W4L12762**
5/8"x3 3/8"x29 7/8" (16x86x758)

M23 (2) | **FORT WALL BOARD - W4L12763**
5/8"x3 1/8"x29 7/8" (16x80x758)

M24 (23) | **WALL BOARD - W4L12764**
5/8"x3 3/8"x29 7/8" (16x86x758)

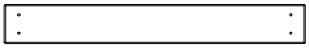

M26 (2) | **WALL BOARD - W4L12765**
5/8"x3 3/8"x26 1/8" (16x86x664)

M27 (18) | **BOTTOM WALL BOARD - W4L12766**
5/8"x3 3/8"x21 3/8" (16x86x544)

M30 (1) | **PICNIC TABLE TOP CLEAT - W4L12767**
5/8"x3 3/8"x16" (16x86x406)

M32 (2) | **CROWS NEST WALL RAIL - W4L12768**
5/8"x3 3/8"x10" (16x86x254)

Wood Components (Not to Scale)

M33 (2) | **FRONT WINDOW WALL BOARD - W4L12769**
5/8"x3 3/8"x6 3/8" (16x86x162)

M34 (1) | **WALL RAIL - W4L12770**
5/8"x3 3/8"x6 3/8" (16x86x162)

M61 (1) | **ATTACHMENT BOARD - W4L12771**
5/8"x3 3/8"x22 7/8" (16x86x580)

M70 (1) | **SLIDE BED SUPPORT - W100935**
5/8"x3 3/8"x19 7/8" (16x86x505)

M73 (1) | **REAR SUPPORT - W4L12772**
5/8"x3 3/8"x20 1/8" (16x86x512)

M74 (10) | **ROCK WALL BOARD - W4L12773**
5/8"x3 3/8"x22 7/8" (16x86x580)

M75 (4) | **ROCK WALL BOARD - W4L12774**
5/8"x3 3/8"x22 7/8" (16x86x580)

M76 (4) | **ROCK WALL BOARD - W4L12775**
5/8"x3 3/8"x22 7/8" (16x86x580)

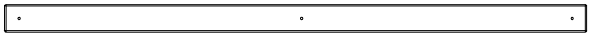

N1 (2) | **FORT WALL BOARD - W4L12776**
5/8"x2 3/8"x50 1/2" (16x60x1284)

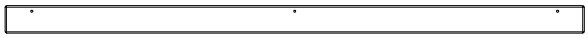

N2 (1) | **SOFFIT CAP - W4L12777**
5/8"x2 3/8"x50 1/4" (16x60x1277)

N3 (2) | **ROOF SUPPORT - W4L12778**
5/8"x2 3/8"x47" (16x60x1193)

N4 (2) | **CROWS NEST WALL BOARD - W4L12779**
5/8"x2 3/8"x19" (16x60x483)

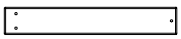

N5 (3) | **FRONT PORCH GABLE TRIM - W4L12780**
5/8"x2 3/8"x15" (16x60x381)

Wood Components (Not to Scale)

N8 (6) | **FRONT PORCH GABLE TRIM - W4L12782**
5/8"x2 3/8"x9 1/2" (16x60x241)

O1 (16) | **CROWS NEST WALL BOARD - W4L12783**
5/8"x1 3/8"x32 1/2" (16x34x825)

O2 (1) | **SAFETY BOARD - W4L12784**
5/8"x1 3/8"x28 5/8" (16x34x726)

Q1 (1) | **SLIDE ATTACHMENT BOARD - W4L12792**
1"x4 1/4"x27" (24x108x687)

SP1 (1) | **SWING BEAM SUPPORT - W4L12791**
3 3/8"x3 3/8"x48 3/8" (86x86x1229)

Y1 (2) | **TOP FLOOR BOARD - W4L12785**
5/8"x4"x78" (16x102x1980)

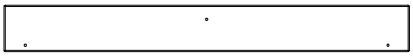

Y2 (2) | **BOTTOM FLOOR BOARD - W4L12786**
5/8"x4"x35 1/4" (16x102x895)

Y3 (1) | **ROCK WALL END BOARD - W4L12787**
5/8"x4"x22 7/8" (16x102x580)

FP1 (4) | **BOTTOM FLOOR PANEL - W2A02648**
1 5/8"x13 1/2"x35 3/8" (40x344x897)

FP2 (4) | **FLOOR PANEL - W2A02649**
1 1/4"x13 1/2"x81 7/8" (32x344x2080)

Wood Components (Not to Scale)

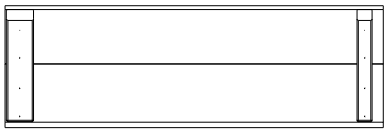

RP1 (1) | **LEFT PORCH PEAK ROOF PANEL - W2A02650**
1 5/8"x10 1/2"x32 7/8" (42x268x834)

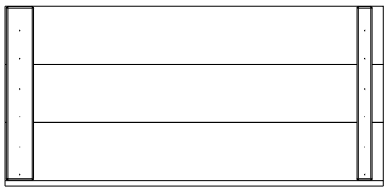

RP2 (1) | **LEFT PORCH ROOF PANEL - W2A02651**
1 5/8"x15 5/8"x32 7/8" (42x396x834)

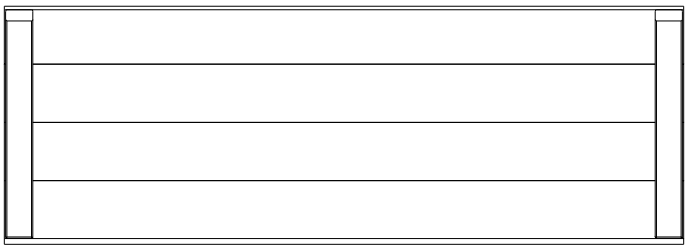

RP3 (2) | **PEAK ROOF PANEL - W2A02652**
1 5/8"x20 5/8"x59" (42x524x1499)

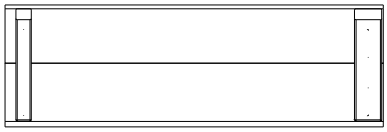

RP4 (1) | **RIGHT PORCH PEAK ROOF PANEL - W2A02653**
1 5/8"x10 1/2"x32 7/8" (42x268x834)

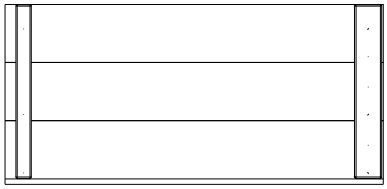

RP5 (1) | **RIGHT PORCH ROOF PANEL - W2A02654**
1 5/8"x15 5/8"x32 7/8" (42x396x834)

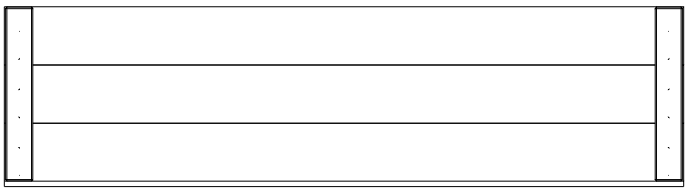

RP6 (4) | **ROOF PANEL - W2A02655**
1 5/8"x15 5/8"x59" (42x396x1499)

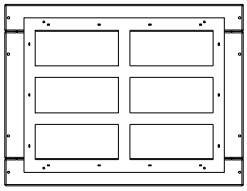

WP1 (6) | **BAY WINDOW PANEL - W2A02656**
7/8"x15 3/4"x20 3/4" (21x400x526)

Hardware Components

H100363 (1) | BOLT WH BLK 5/16X6

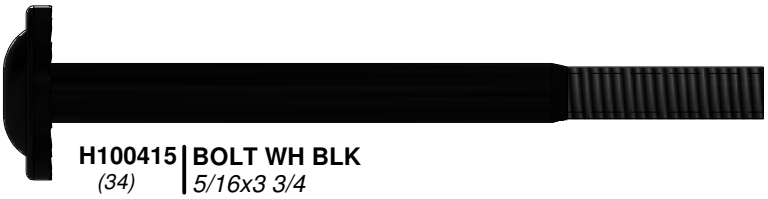

H100415 (34) | BOLT WH BLK 5/16x3 3/4

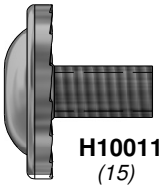

H100115 (15) | BOLT WH 5/16x1/2

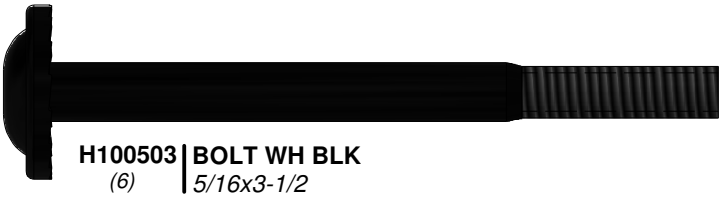

H100503 (6) | BOLT WH BLK 5/16x3-1/2

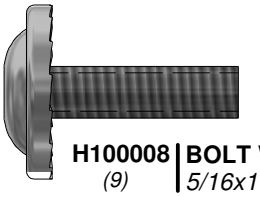

H100008 (9) | BOLT WH 5/16x1

H100484 (2) | BOLT WH BLK 5/16x3 1/4

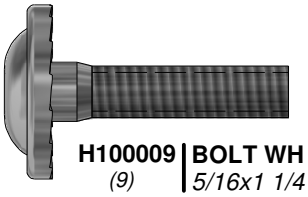

H100009 (9) | BOLT WH 5/16x1 1/4

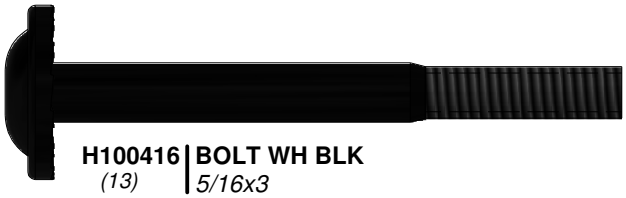

H100416 (13) | BOLT WH BLK 5/16x3

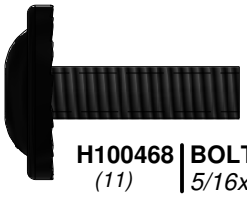

H100468 (11) | BOLT WH BLK 5/16x1

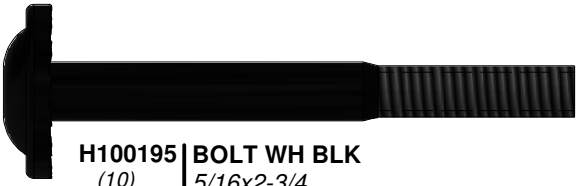

H100195 (10) | BOLT WH BLK 5/16x2-3/4

H100459 (6) | BOLT WH BLK 5/16x1 1/4

H100194 (3) | BOLT WH BLK 5/16x2 1/2

H100396 (14) | BOLT WH BLK 5/16x1/2

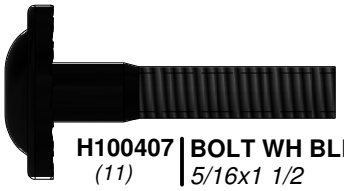

H100407 (11) | BOLT WH BLK 5/16x1 1/2

H100205 (30) | BOLT WH BLK 5/16x2-1/4

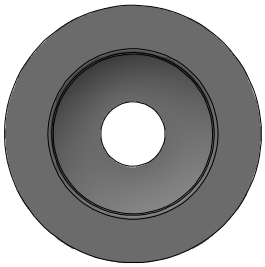

H100225 (1) | FLANGE CUP WASHER 9x34

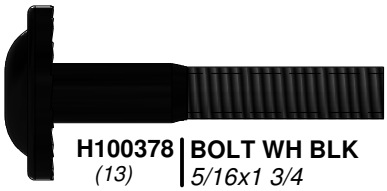

H100378 (13) | BOLT WH BLK 5/16x1 3/4

H100457 (7) | BOLT WH BLK 5/16x2

H100082 (1) | SCREW TAPPING 14x2 1/2

Hardware Components

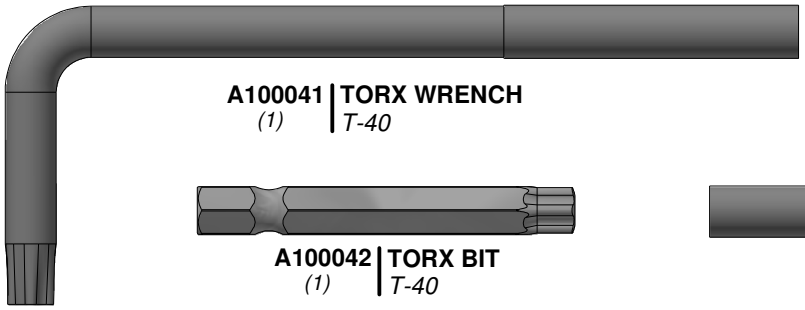

A100041 | TORX WRENCH
(1) | T-40

H100147 | TORX BIT
(1) | T-30

A100042 | TORX BIT
(1) | T-40

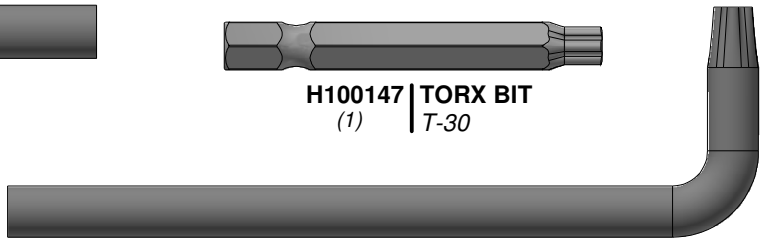

H100114 | TORX WRENCH
(1) | T-30

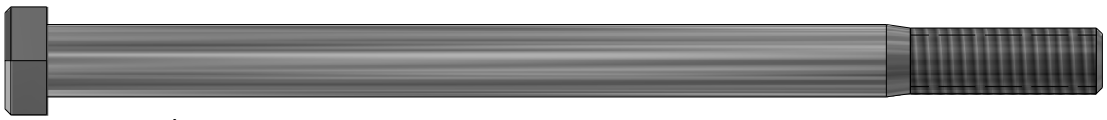

H100654 | BOLT HEX
(13) | 3/8x5-1/2

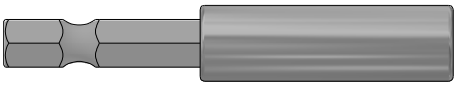

H101100 | MAGNETIC DRIVER
(1)

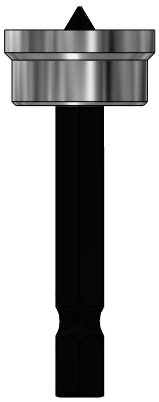

H100764 | SCREW SETTER
(1)

H100761 | BOLT HEX BLK
(4) | 5/16x2

H100471 | LAG SCREW WH BLK
(7) | 5/16x1 1/2

H100657 | BOLT HEX BLK
(4) | 5/16x1 3/4

H100458 | LAG SCREW WH BLK
(50) | 5/16x2

H100481 | BOLT HEX BLK
(4) | 5/16x1 1/4

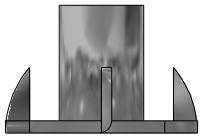

H100073 | T-NUT
(13) | 3/8

H100659 | LAG SCREW BLK
(9) | 5/16x1 1/2

H100197 | LAG SCREW WH BLK
(46) | 5/16x2 1/2

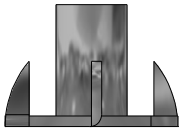

H100074 | T-NUT
(15) | 5/16

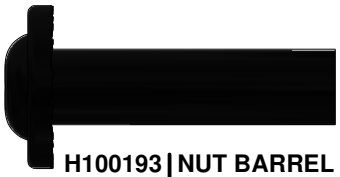

H100193 | NUT BARREL WH BLK
(2) | 5/16x1-1/2

H100192 | NUT BARREL WH BLK
(33) | 5/16x7/8

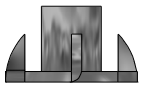

H100072 | T-NUT
(26) | 1/4

H100006 | NUT BARREL WH
(9) | 5/16x1 1/2

H100469 | NUT BARREL WH BLK
(1) | 5/16x5/8

H100379 | T-NUT BLK
(128) | 5/16

Hardware Components

H100090 (33) | **SCREW PFH** *8x2 1/2"*

H100091 (2) | **SCREW PFH** *8X2 1/4*

H100111 (13) | **SCREW PFH** *8x2*

H100089 (4) | **SCREW PFH** *8x1 3/4*

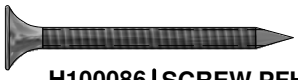

H100086 (244) | **SCREW PFH** *8x1 1/2*

H100087 (2) | **SCREW PFH** *8x1 1/4*

H100088 (338) | **SCREW PFH** *8x1 1/8*

H100121 (7) | **SCREW PFH** *8x3/4*

H100201 (17) | **SCREW PFH BLK** *8x2-1/2*

H100483 (35) | **SCREW PFH BLK** *8x2 1/4*

H100391 (72) | **SCREW PFH BLK** *8x2*

H100200 (74) | **SCREW PFH BLK** *8x1 1/2*

H100380 (49) | **SCREW PFH BLK** *8x1 1/8*

H100385 (9) | **SCREW PFH BLK** *8x1*

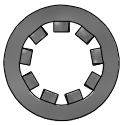

H100108 (26) | **WASHER LOCK INT** *8x15*

H100199 (24) | **WASHER LOCK EXT BLK** *12x19*

H100198 (192) | **WASHER LOCK EXT BLK** *8x19*

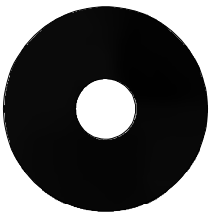

H100478 (22) | **WASHER FLAT BLK** *8x27*

H100832 (4) | **BOLT PTH BLK (with LOCTITE)** *1/4x3/4*

H100831 (4) | **NUT BARREL PTH BLK** *1/4x3/4*

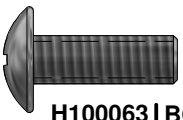

H100063 (26) | **BOLT PTH** *1/4x3/4*

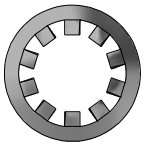

H100107 (13) | **WASHER LOCK INT** *10x18*

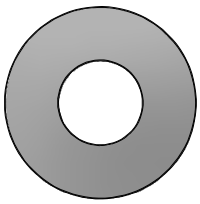

H100102 (13) | **WASHER FLAT** *11x25*

H100477 (22) | **WASHER SPLIT BLK** *5/16*

H100360 (4) | **SCREW PPH WZ** *4x1/2*

H100797 (19) | **SCREW PWH BLK** *8x1*

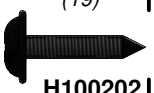

H100202 (4) | **SCREW PWH BLK** *8x5/8*

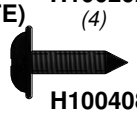

H100408 (2) | **SCREW PWH BLK** *8x1/2*

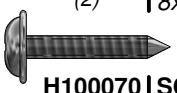

H100070 (4) | **SCREW PWH** *8x3/4*

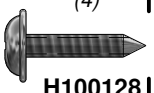

H100128 (26) | **SCREW PWH** *8x5/8*

Accessory Components (Not to Scale)

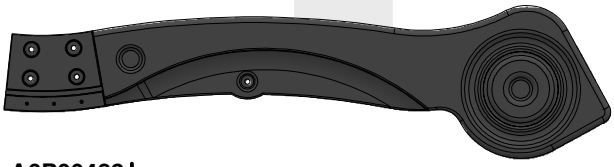

A6P00483 (1) | SLIDE RAIL 10' BOTTOM LEFT GREEN

A100027 (2) | SWING SEAT GREEN 26"

A6P00485 (1) | SLIDE RAIL 10' TOP LEFT GREEN

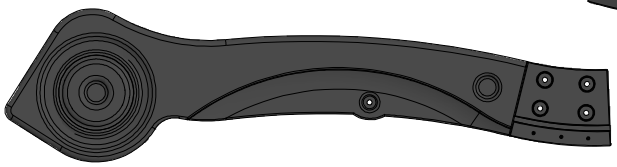

A6P00484 (1) | SLIDE RAIL 10' BOTTOM RIGHT GREEN

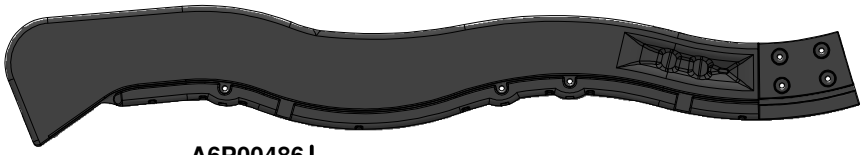

A6P00486 (1) | SLIDE RAIL 10' TOP RIGHT GREEN

A4M01126 (x1) | 26" WEB SWING

A6P00036 (6) | GREEN HC ROCK #1

A6P00037 6 | GREEN HC ROCK #2

A4M01091 (1) | 60" SLIDE BRACE (RIGHT)

A4M01092 (1) | 60" SLIDE BRACE (LEFT)

A6P00385 (1) | SLIDE BED 10' DARK GREEN

A6P00487 (4) | SLIDE TUBE SUPPORT

A100164 (1) | BYD ID TAG (LARGE) AGES 3-10

A4M01150 (1) | VERTICAL ID PLATE

Accessory Components (Not to Scale)

A100047 (4) | CHAIN GREEN 57"

A100134 (2) | HAND GRIP GREEN 816 C/C

A100324 (2) | LADDER RUNG 578 GREEN

A100118 (4) | HAND GRIP METAL GREEN 381 c/c

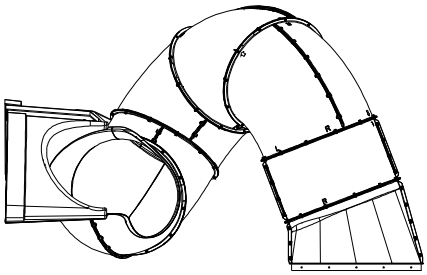

(1) TUBE SLIDE ASSEMBLY

A100069 (4) | QUICK LINK

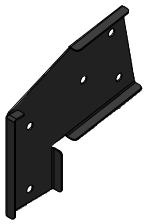

A100325 (1) | SWING BEAM EXTENSION BRACKET-LEFT

A100314 (1) | "A" REVISION TAG

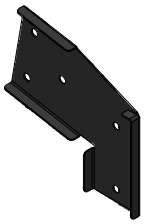

A100326 (1) | SWING BEAM EXTENSION BRACKET-RIGHT

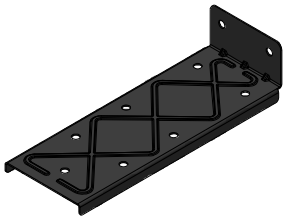

A4M00993 (2) | EXTENDED SWING BEAM BRACKET

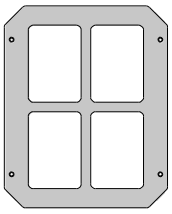

A100014 (1) | PLASTIC WINDOW WHITE

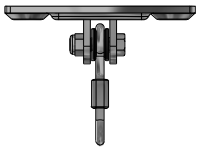

A4M00505 (6) | SWING HANGER

A100396 (4) | L BRACKET 51x32x82x3.175

A100178 (4) | AUGER GROUND STAKE

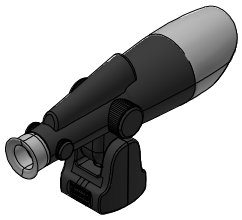

A100104 (1) | TELESCOPE

A4M00527 (2) | GROUND STAKE REBAR

A100340 (11) | L BRACKET 2.5x38x50x55

PRE-ASSEMBLY STEP 1 - SORTING PARTS

It is critical for ease of assembly that you take the time to sort and organize the wood and hardware.

WOOD PARTS:

- **Organize wood parts by the three-digit, alpha-numeric number stamped on each board (ex. P01).**
- **If there are multiple boards with the same stamped number, stack those pieces together.**
- **Stamps can be found on the flat surface of the boards or on the end of the boards.**
- **Allow yourself plenty of room - the wood pieces can take up a significant amount of space.**

NOTE: CARTONS ARE NOT ORGANIZED BY BOARD NUMBER.

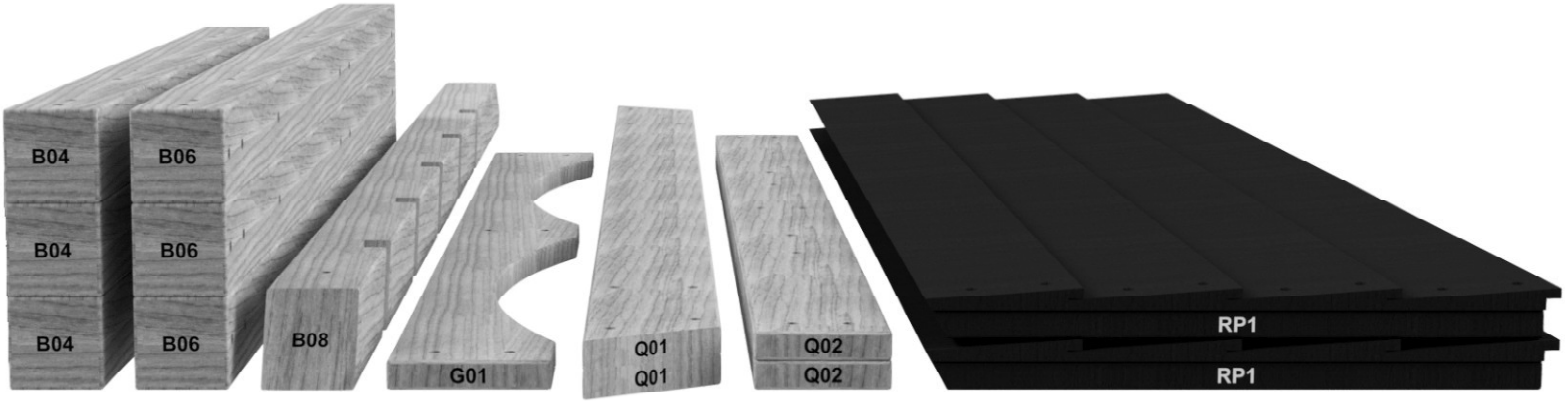

HARDWARE PARTS:

- **We recommend that you have a separate table to organize the hardware.**
- **Hardware bags are printed with a seven-digit, alpha-numeric part number.**
- **You can organize your hardware by part number or group by hardware type (i.e. bolts, nuts, etc.).**
- **During assembly you only need to reference the last four digits of the number.**

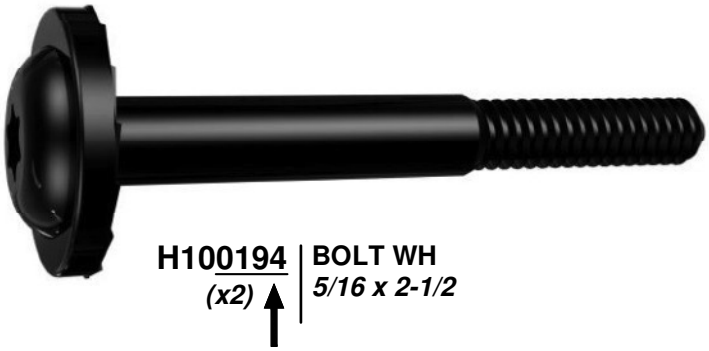

PRE-ASSEMBLY STEP 2 - TOOLS REQUIRED

Cordless Drill or
Electric Drill

Drill Attachments:
Phillips Head

1/8", 3/16", 3/8" & 7/16"
Drill Bits

Phillips Screw Driver

Open End Wrenches 1/2" & 9/16"

3/8" Drive Ratchet, 1/2" &
9/16" STD Sockets 1/2" & 9/16" Deep
Sockets

Claw Hammer

Rubber Mallet - Optional

Tape Measure

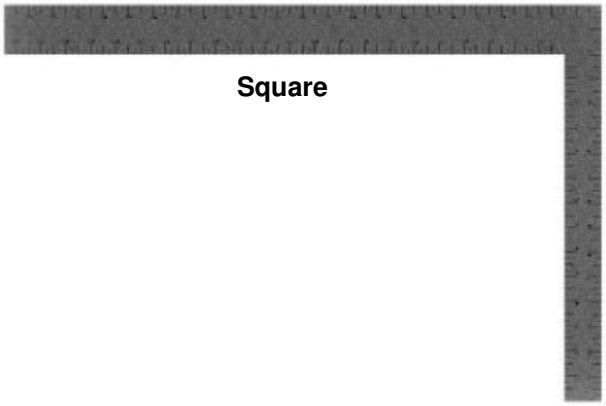

Square

Level 24"

PRE-ASSEMBLY STEP 3 - CHOOSE YOUR ASSEMBLY METHOD

There are several types of assembly instructions available to you.

1. **Printed Assembly Manual included with your set**
2. **BILT APP - 3D interactive instructions**
3. **Combination of the Printed Manual and BILT APP (Note: Step numbers can differ between the two methods)**

SLIDE ASSEMBLY

STEP 1

A6P00385 *(x1)* | **SLIDE BED 10' DARK GREEN**

M70 *(x1)* | **SLIDE BED SUPPORT - W100935**
5/8"x3 3/8"x19 7/8" (16x86x505)

H100115 *(x3)* | **BOLT WH** *5/16x1/2*

H100074 *(x3)* | **T-NUT** *5/16*

NOTE:
TAKE NOTE OF SLIDE BED SURFACE FINISH, THE DULL SIDE WILL BE TOWARDS THE GROUND. PLACE SLIDE BRACE CENTERED ON THE BOTTOM (DULL SIDE) AND 1/2" FROM THE EDGE. USE **M70** BOARD AS A TEMPLATE FOR DRILLING BOTTOM HOLE PATTERN IN SLIDE BED. USE A 5/16" DRILL BIT.

TIP:
PRE-BENDING THE ENDS WILL EASE ASSEMBLY. PLACING THE SLIDE BED OUT IN THE SUN MAKES IT EASIER TO BEND.

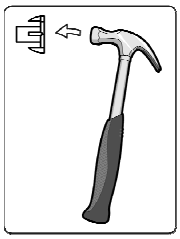

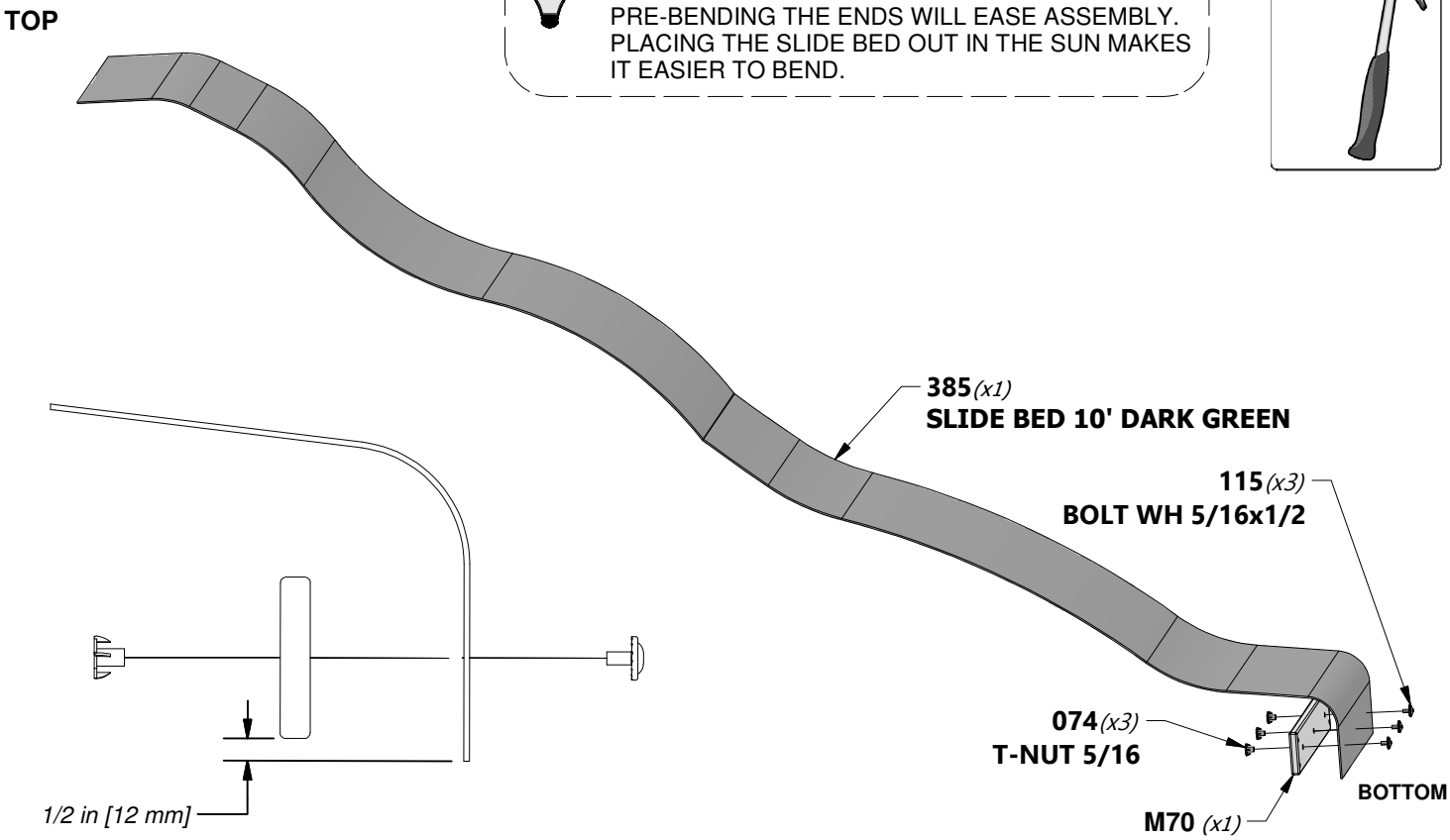

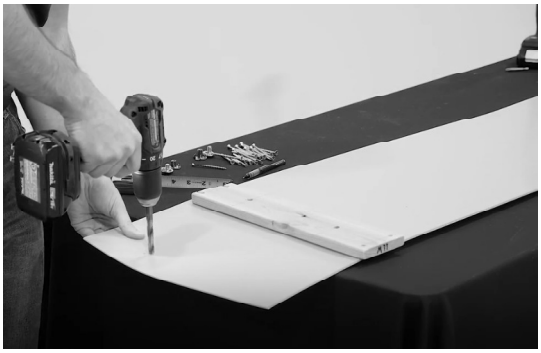

SLIDE ASSEMBLY

STEP 2

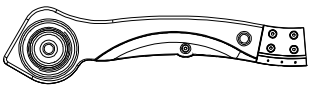

A6P00484 *(x1)* | **SLIDE RAIL 10' BOTTOM RIGHT GREEN**

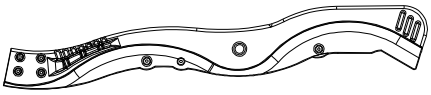

A6P00486 *(x1)* | **SLIDE RAIL 10' TOP RIGHT GREEN**

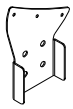

A4M01091 *(x1)* | **60" SLIDE BRACE (RIGHT)**

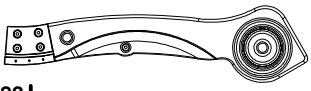

A6P00483 *(x1)* | **SLIDE RAIL 10' BOTTOM LEFT GREEN**

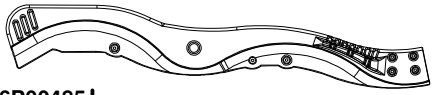

A6P00485 *(x1)* | **SLIDE RAIL 10' TOP LEFT GREEN**

A4M01092 *(x1)* | **60" SLIDE BRACE (LEFT)**

H100006 *(x8)* | **NUT BARREL WH** *5/16x1 1/2*

H100115 *(x8)* | **BOLT WH** *5/16x1/2*

H100121 *(x6)* | **SCREW PFH** *8x3/4*

NOTE:
BUILD 2 SIDE RAILS, MAKING A LEFT AND RIGHT ASSEMBLY.

486 *(x1)*
SLIDE RAIL 10' TOP RIGHT GREEN

484 *(x1)*
SLIDE RAIL 10' BOTTOM RIGHT GREEN

121 *(x3)*
SCREW - 8x3/4"

006 *(x4)*
NUT BARREL - 1 1/2"

091 *(x1)*
60" SLIDE BRACE (RIGHT)

115 *(x4)*
BOLT - 1/2"

SLIDE ASSEMBLY

STEP 3

A6P00487 *(x4)* | **SLIDE TUBE SUPPORT**

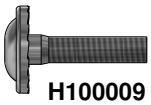

H100009 *(x4)* | **BOLT WH** *5/16x1 1/4*

NOTE:

INSERT THE (4) SLIDE SUPPORT TUBES INTO THEIR RESPECTIVE PILOT LOCATIONS (FIGURE 1).

PLACE (1) SLIDE RAIL ASSEMBLY ON A FLAT SURFACE AND BEGIN INSERTING SLIDE BED AT THE BOTTOM OF THE SLIDE RAIL (FIGURE 2). HAVE A HELPER BEND THE SLIDE BED TOWARDS THE TOP OF THE SLIDE AND INSERT THE BED INTO THE SLIDE CAVITY. MAKE SURE SLIDE BED IS INSERTED WITHIN 1/8" (3mm) OF GROOVE BOTTOM.

TIP:
A HELPER IS RECOMMENDED FOR THESE FOLLOWING STEPS.

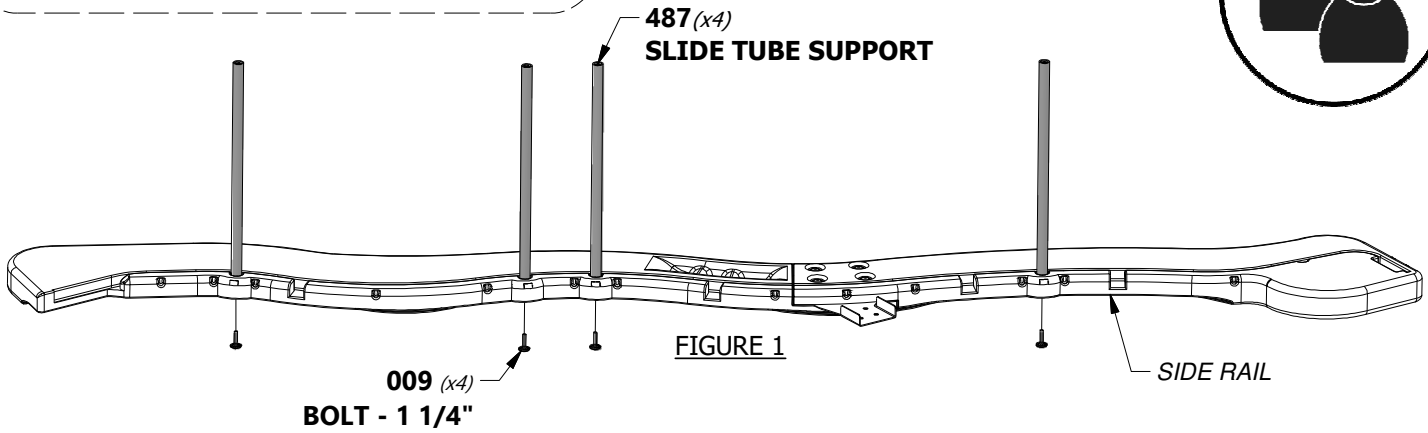

FIGURE 1

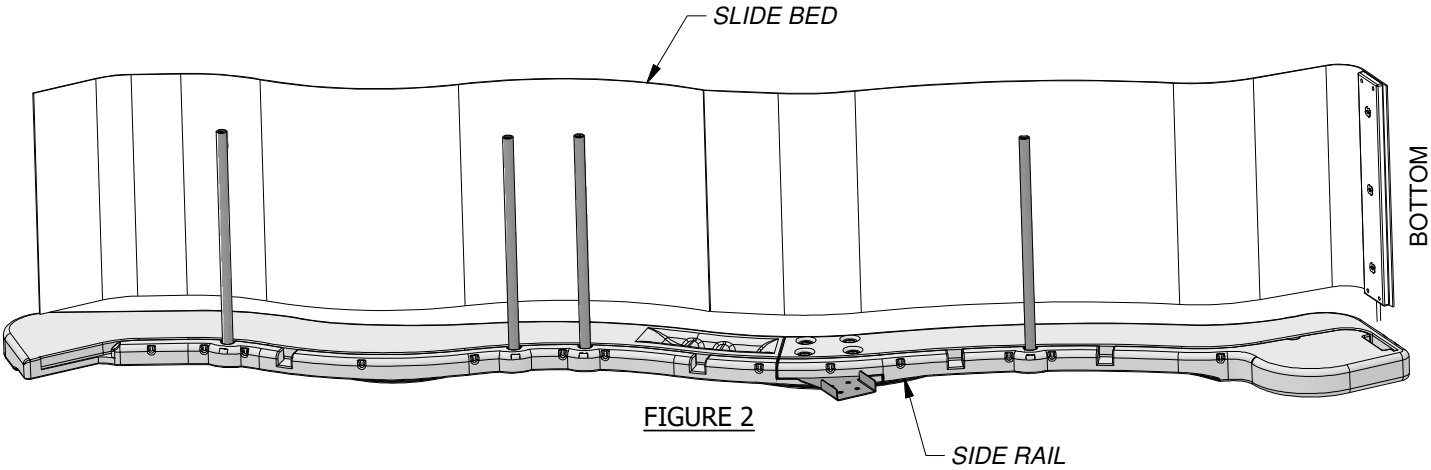

FIGURE 2

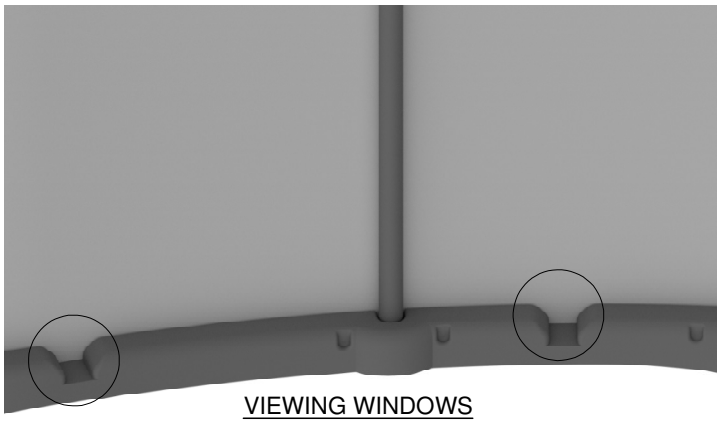

VIEWING WINDOWS

SLIDE ASSEMBLY

STEP 4

NOTE:
PLACE SECOND SLIDE RAIL ASSEMBLY OVER THE TOP OF THE SLIDE BED AND SLIDE SUPPORT TUBES. INSERT THE SLIDE BED AND SLIDE SUPPORT TUBES INTO THE SLIDE CAVITY. MAKE SURE SLIDE BED IS INSERTED WITHIN 1/8" (3mm) OF GROOVE BOTTOM.

FAILURE TO INSERT SLIDE BED PROPERLY MAY RESULT IN INJURY OR AMPUTATION. EXPOSED SLIDE EDGES CAN BE SHARP AND BECOME A LACERATION HAZARD IF THE SLIDE IS NOT PROPERLY ASSEMBLED.

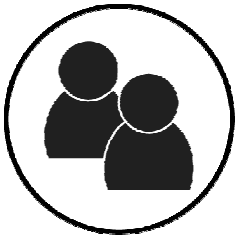

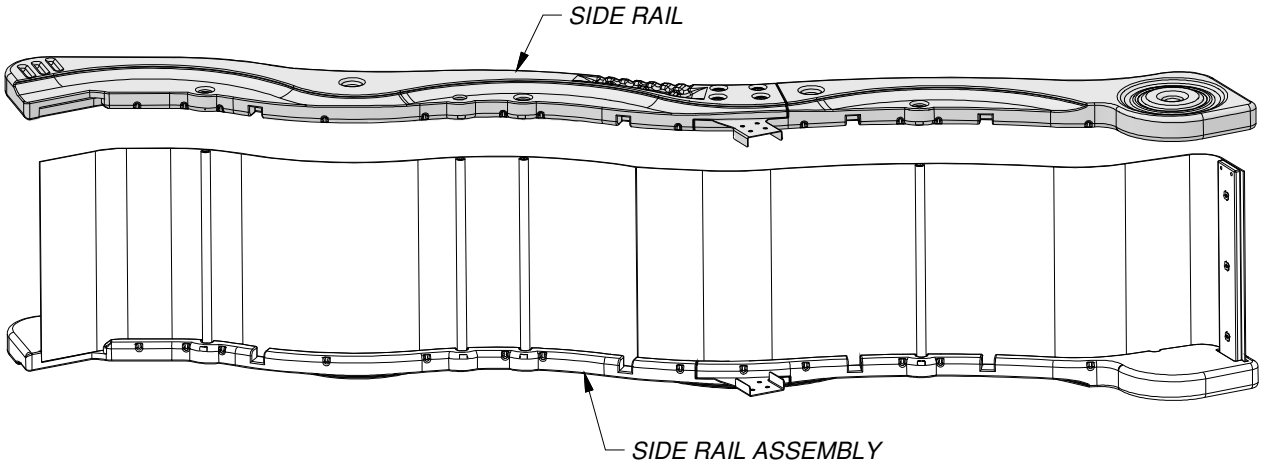

TIP:
USE A RUBBER MALLET TO FULLY SEAT THE SLIDE BED INTO THE SLIDE CAVITY.

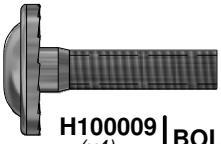

H100009 *(x4)* | **BOLT WH 5/16x1 1/4**

NOTE:
USE 1 1/4" BOLTS TO FASTEN EACH SIDE OF THE SLIDE SUPPORT TUBES.

TIP:
HAVING A HELPER HOLD THE SLIDE ASSEMBLY TOGETHER WHILE YOU FASTEN WILL MAKE IT EASIER TO ASSEMBLE.

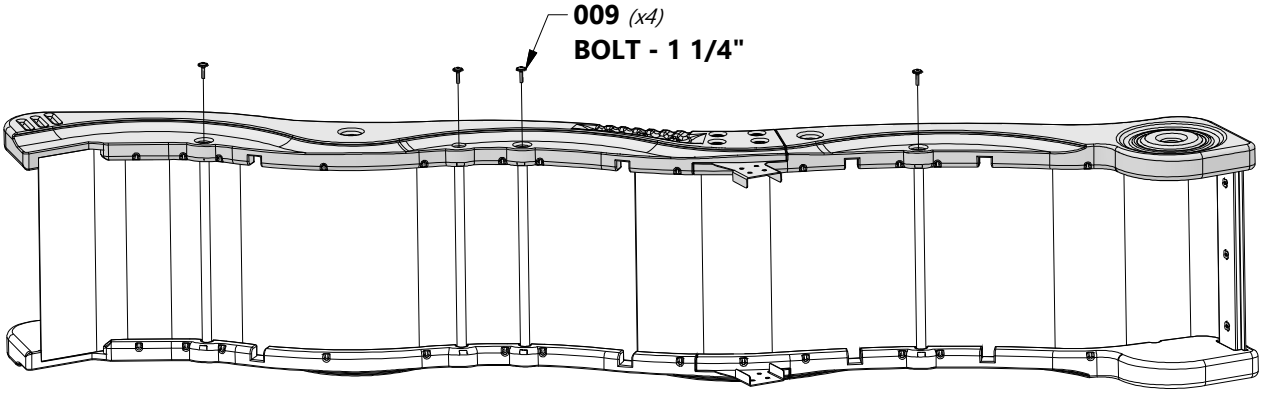

SLIDE ASSEMBLY STEP 6

H100090 *(x30)* | **SCREW PFH** *8x2 1/2"*

NOTE:
USING AN 1/8" DRILL BIT, DRILL PILOT HOLES IN EACH INDENTATION ALONG EACH SIDE RAIL. THERE SHOULD BE 15 INDENTATIONS ON EACH RAIL. BE SURE TO DRILL THROUGH THE SLIDE RAIL AND THE SLIDE BED. THEN SECURE WITH THE PROVIDED HARDWARE.

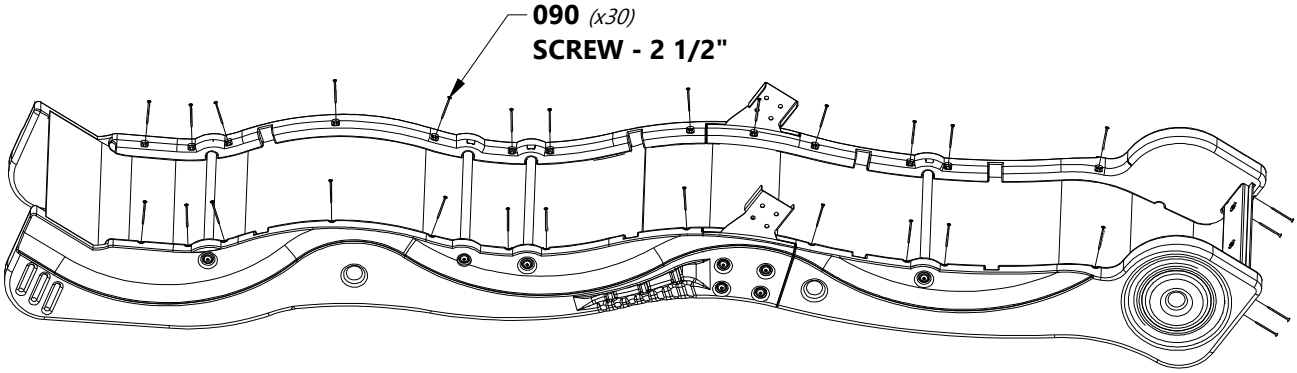

SLIDE ASSEMBLY

STEP 7

H80 *(x1)* | **SLIDE BRACE WIDE - W4L15715**
1"x3 3/8"x18 3/8" (24x86x466)

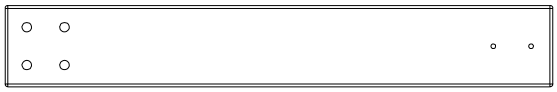

H81 *(x2)* | **SLIDE BRACE UPRIGHT - W4L13301**
1"x3 3/8"x22 7/8" (24x86x580)

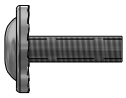

H100008 *(x8)* | **BOLT WH**
5/16x1

H100074 *(x8)* | **T-NUT**
5/16

H100111 *(x4)* | **SCREW PFH**
8x2

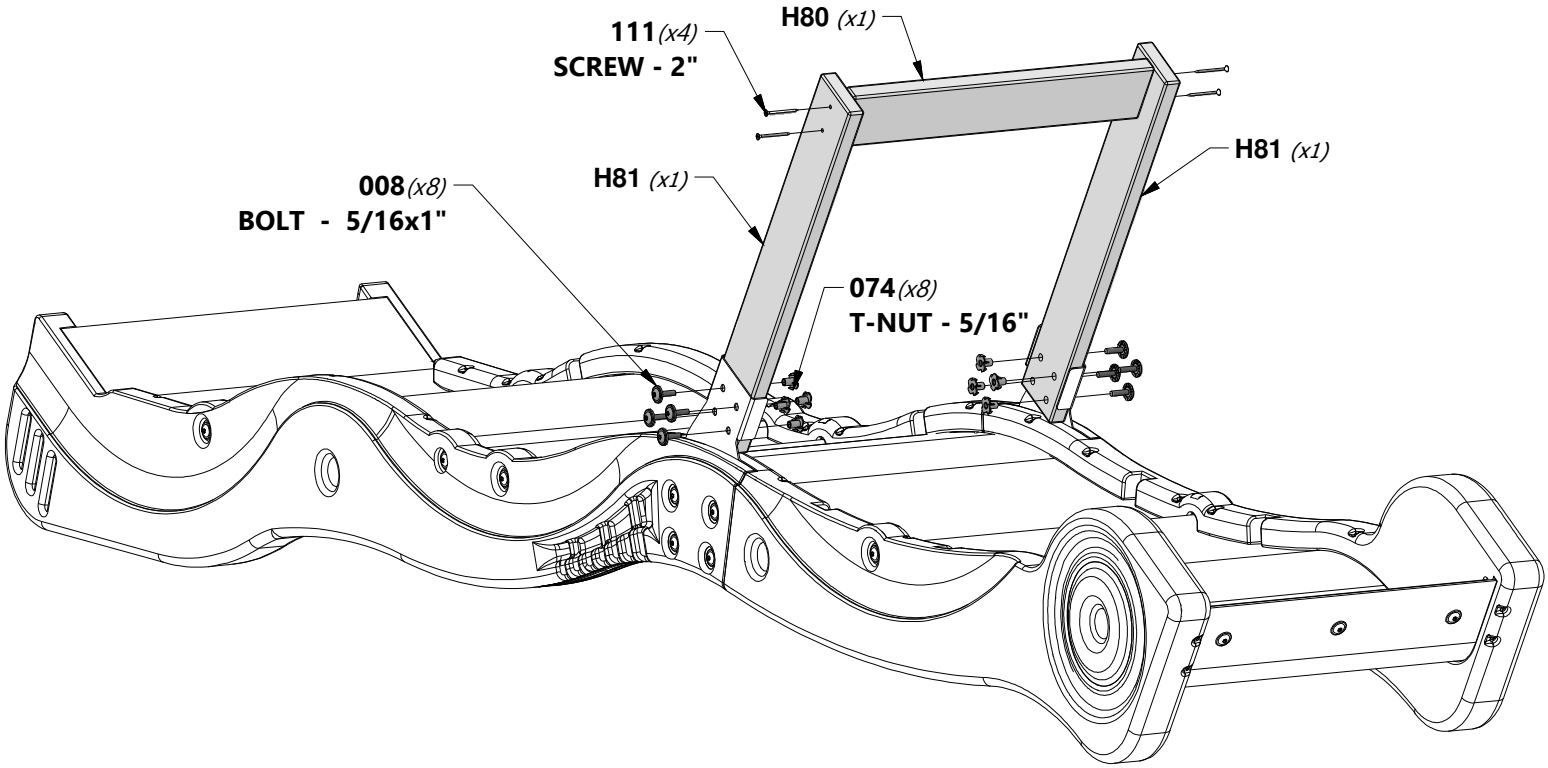

LADDER ASSEMBLY

STEP 1

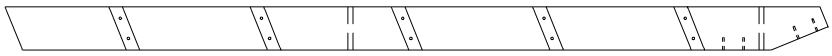

E77 *(1)* | **LEFT UPRIGHT - W4L12693**
1 3/8"x3 3/8"x64 3/8" (36x86x1634)

H76 *(5)* | **LADDER RUNG - W4L12736**
1"x3 3/8"x18 1/8" (24x86x460)

H100391 *(10)* | **SCREW PFH BLK**
8x2

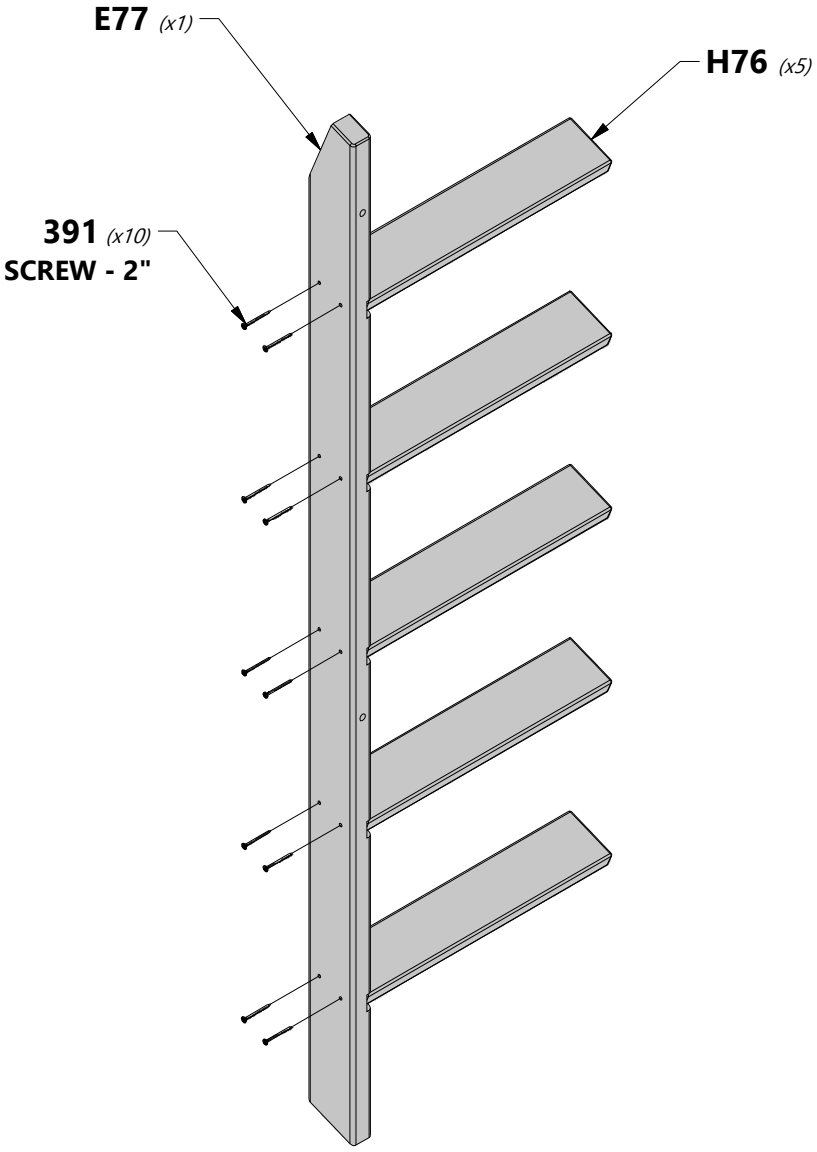

LADDER ASSEMBLY

STEP 2

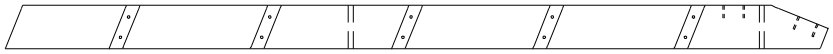

E78 (1) | **RIGHT UPRIGHT - W4L12694**
1 3/8"x3 3/8"x64 3/8" (36x86x1634)

H100391 (10) | **SCREW PFH BLK**
8x2

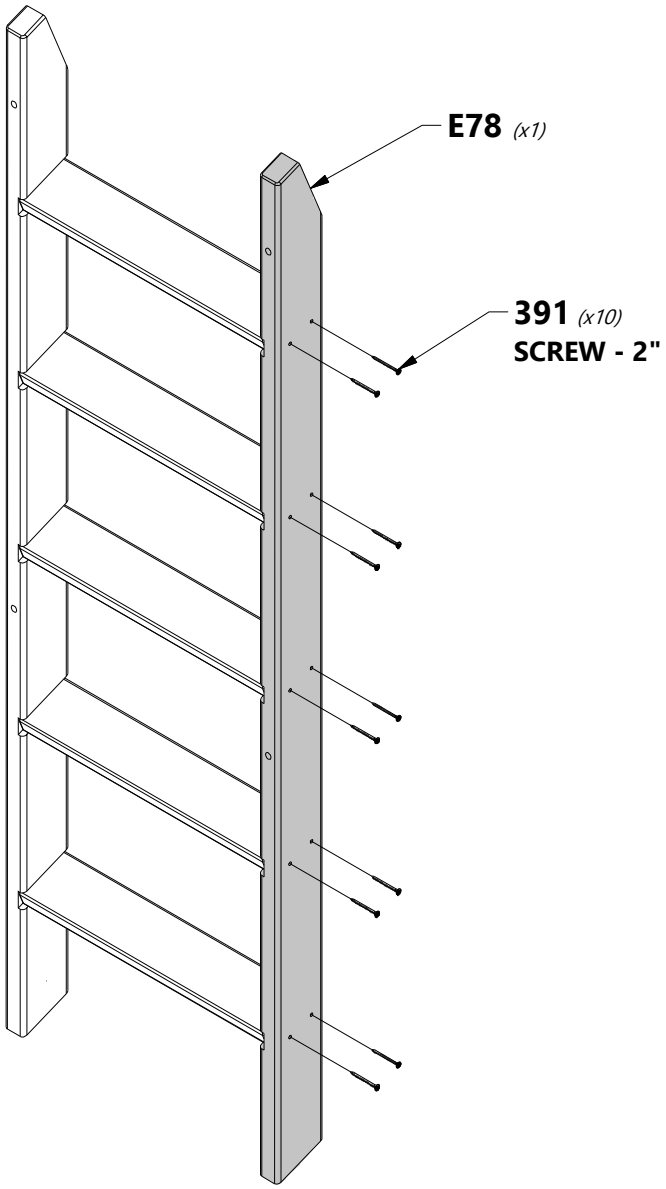

LADDER ASSEMBLY

STEP 3

H77 (1) | **ATTACHMENT BOARD - W4L12737**
1"x3 3/8"x20 1/8" (24x86x512)

M73 (1) | **REAR SUPPORT - W4L12772**
5/8"x3 3/8"x20 1/8" (16x86x512)

H100391 (8) | **SCREW PFH BLK**
8x2

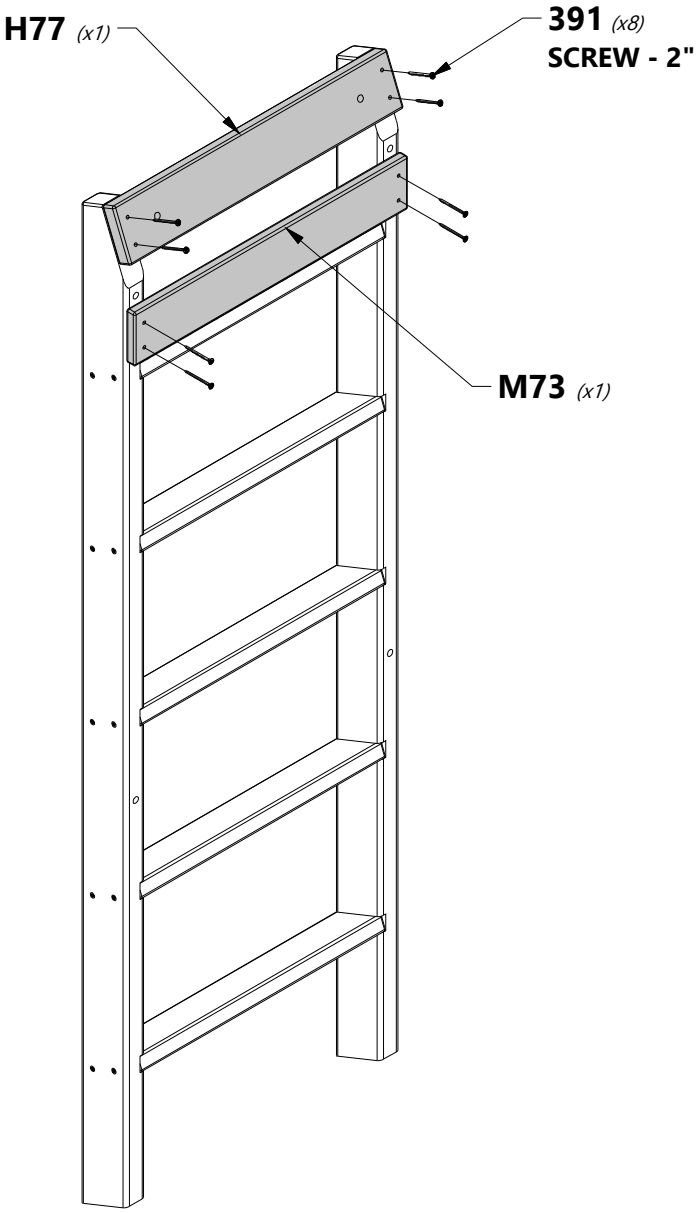

LADDER ASSEMBLY

STEP 4

A100134 (2) | HAND GRIP GREEN 816 C/C

H100503 (4) | BOLT WH BLK 5/16x3-1/2

H100379 (4) | T-NUT BLK 5/16

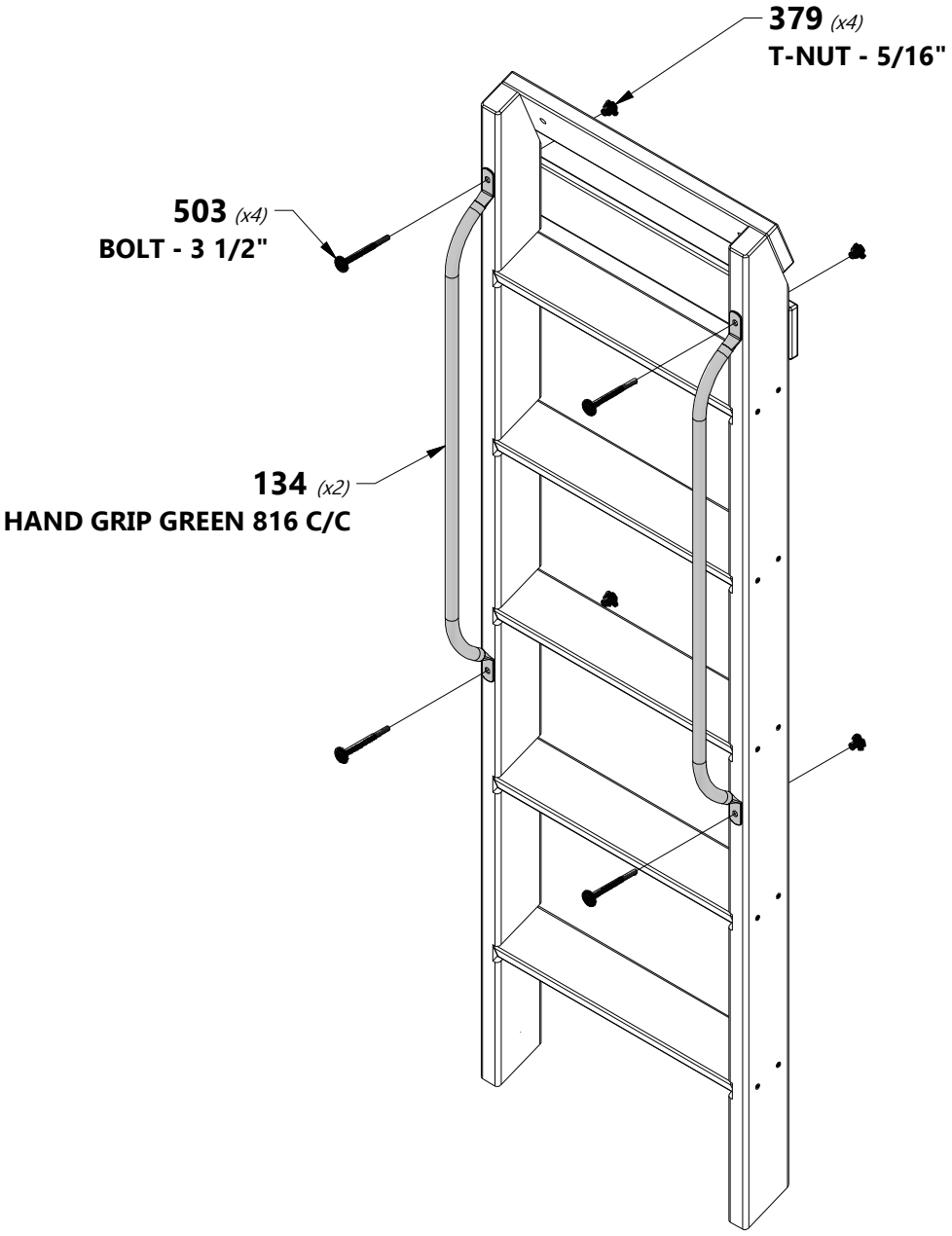

ROCKWALL ASSEMBLY

STEP 1

M75 (4) | **ROCK WALL BOARD - W4L12774**
5/8"x3 3/8"x22 7/8" (16x86x580)

M76 (4) | **ROCK WALL BOARD - W4L12775**
5/8"x3 3/8"x22 7/8" (16x86x580)

A6P00036 (6) | **GREEN HC ROCK #1**

A6P00037 (6) | **GREEN HC ROCK #2**

H100108 (24) | **WASHER LOCK INT** *8x15*

H100063 (24) | **BOLT PTH** *1/4x3/4*

H100072 (24) | **T-NUT** *1/4*

TIP:
INSTALL T-NUTS INTO BOARDS BEFORE ASSEMBLY

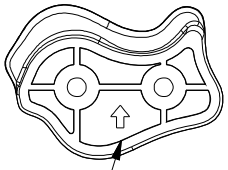

ARROW ON BACK OF ROCK POINTS UP.
*****PLACE ROCKS AS DESIRED*****

M75 *(x2)*

108 *(x4)*
WASHER - 8x15

063 *(x4)*
BOLT - 3/4"

072 *(x4)*
T-NUT - 1/4"

037 *(x2)*
GREEN HC ROCK #2

(2) **LEFT ROCK ASSEMBLY**

036 *(x4)*
GREEN HC ROCK #1

108 *(x16)*
WASHER - 8x15

063 *(x16)*
BOLT - 3/4"

072 *(x16)*
T-NUT - 1/4"

M76 *(x4)*

037 *(x4)*
GREEN HC ROCK #2

(4) **DOUBLE ROCK ASSEMBLY**

M75 *(x2)*

036 *(x2)*
GREEN HC ROCK #1

072 *(x4)*
T-NUT - 1/4"

063 *(x4)*
BOLT - 3/4"

108 *(x4)*
WASHER - 8x15

(2) **RIGHT ROCK ASSEMBLY**

ROCKWALL ASSEMBLY

STEP 2

(2) **LEFT ROCK ASSEMBLY**

(4) **DOUBLE ROCK ASSEMBLY**

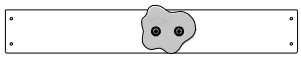

(2) **RIGHT ROCK ASSEMBLY**

M74 (10) | **ROCK WALL BOARD - W4L12773**
5/8"x3 3/8"x22 7/8" (16x86x580)

H72 (2) | **ROCKWALL RAIL - W4L12735**
1"x3 3/8"x61 3/4" (24x86x1570)

H100086 (72) | **SCREW PFH**
8x1 1/2

086 *(x72)*
SCREW - 1 1/2"

H72 *(x2)*

TOP

RECOMMENDED BOARD PLACEMENT PATTERN

1/8 in

M74 *(x10)*

(2) **LEFT ROCK ASSEMBLY**

(2) **RIGHT ROCK ASSEMBLY**

(4) **DOUBLE ROCK ASSEMBLY**

1/8 in

TOP

SIDE VIEW

ROCKWALL ASSEMBLY

STEP 3

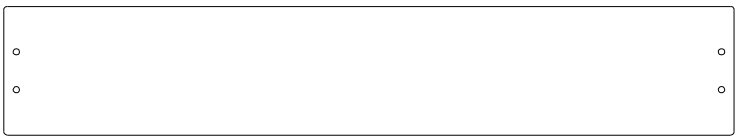

Y3 (1) | **ROCK WALL END BOARD - W4L12787**
5/8"x4"x22 7/8" (16x102x580)

H100200 (4) | **SCREW PFH BLK**
8x1 1/2

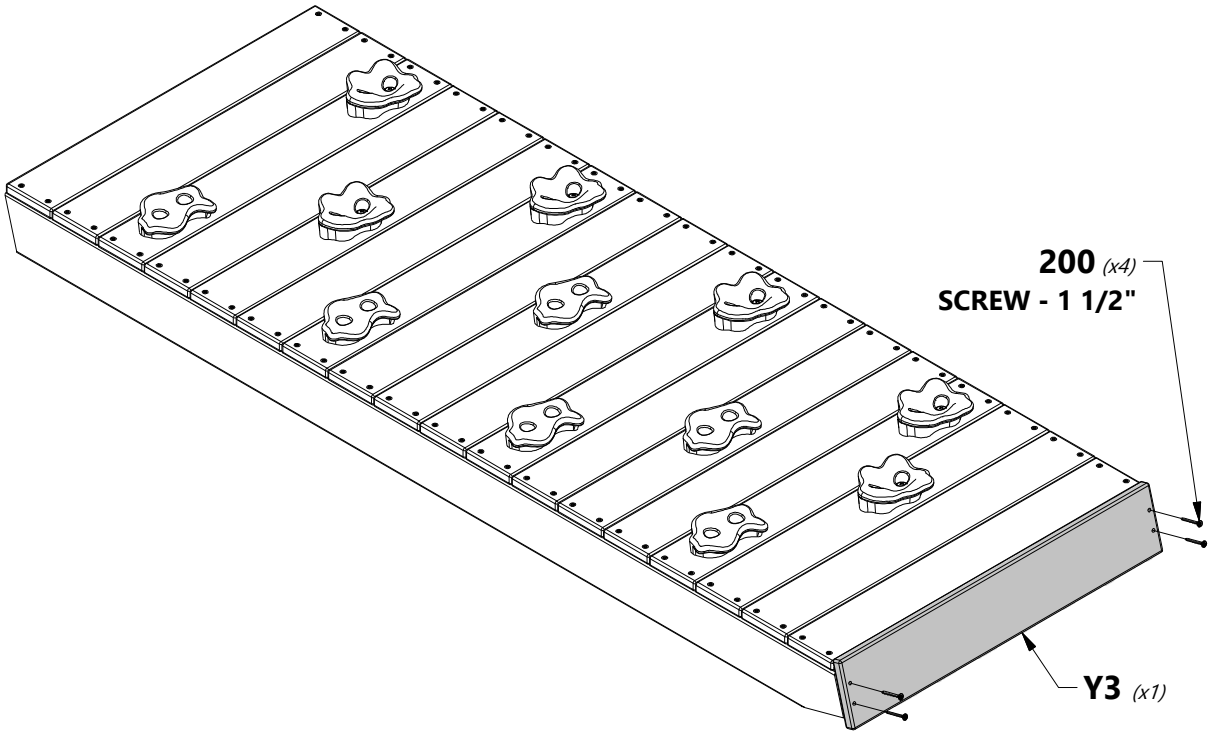

SIDE VIEW

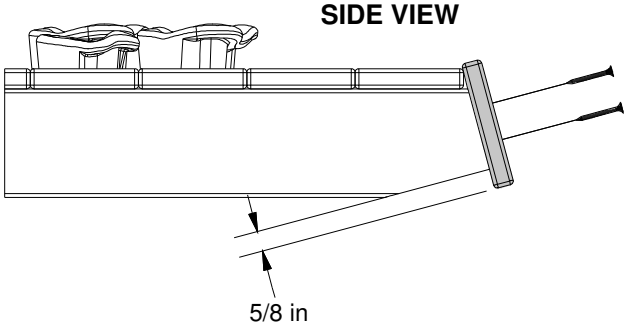

ROCKWALL ASSEMBLY

STEP 4

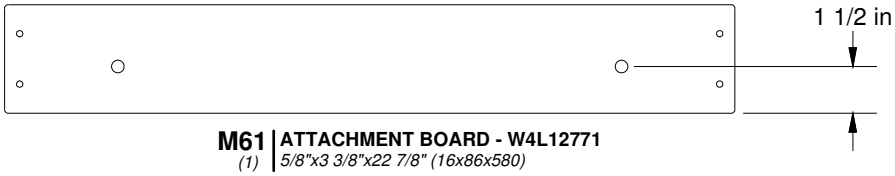

M61 (1) | **ATTACHMENT BOARD - W4L12771**
5/8"x3 3/8"x22 7/8" (16x86x580)

H100200 (4) | **SCREW PFH BLK**
8x1 1/2

H100379 (2) | **T-NUT BLK**
5/16

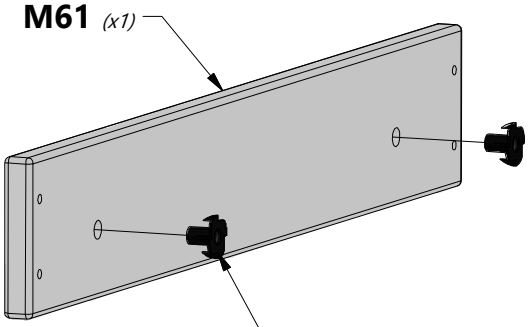

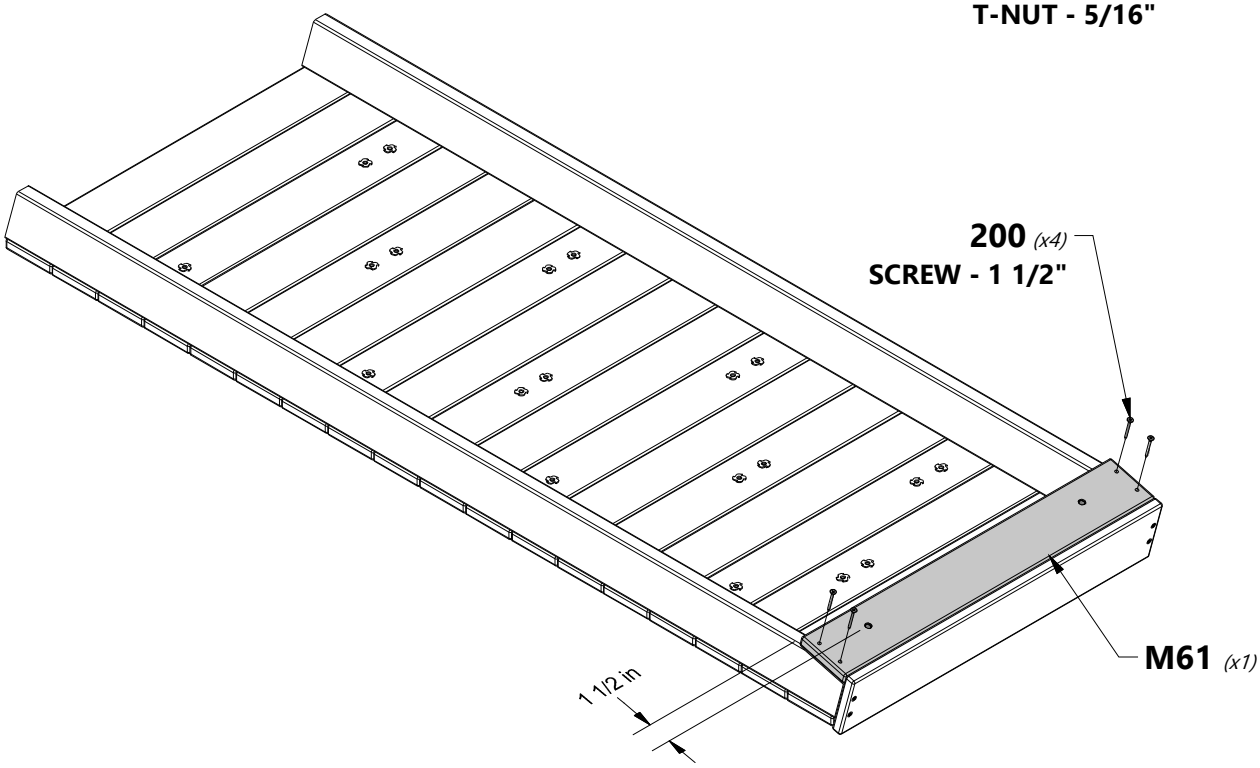

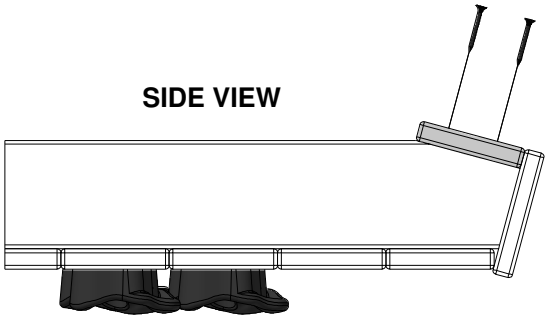

T-NUTS TO THE INSIDE WHEN INSTALLING BOARD

BAY WINDOW

STEP 1

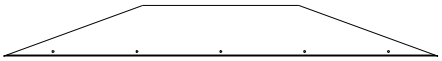

G5 (4) | **BAY WINDOW HEADER - W4L12702**
1"x5 1/4"x45 1/4" (24x134x1150)

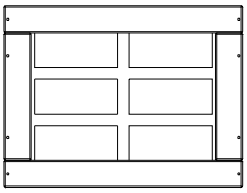

WP1 (6) | **BAY WINDOW PANEL - W2A02656**
7/8"x15 3/4"x20 3/4" (21x400x526)

H100200 (40) | **SCREW PFH BLK**
8x1 1/2

H100385 (8) | **SCREW PFH BLK**
8x1

REPEAT STEP TO COMPLETE (2) BAY WINDOW ASSEMBLIES.

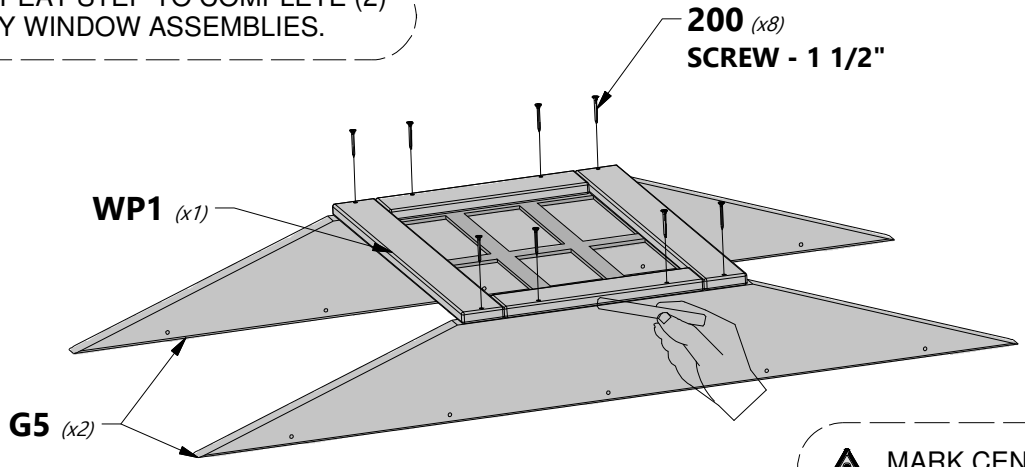

MARK CENTERS ON EACH PART THEN ALIGN PARTS ON MARKS.

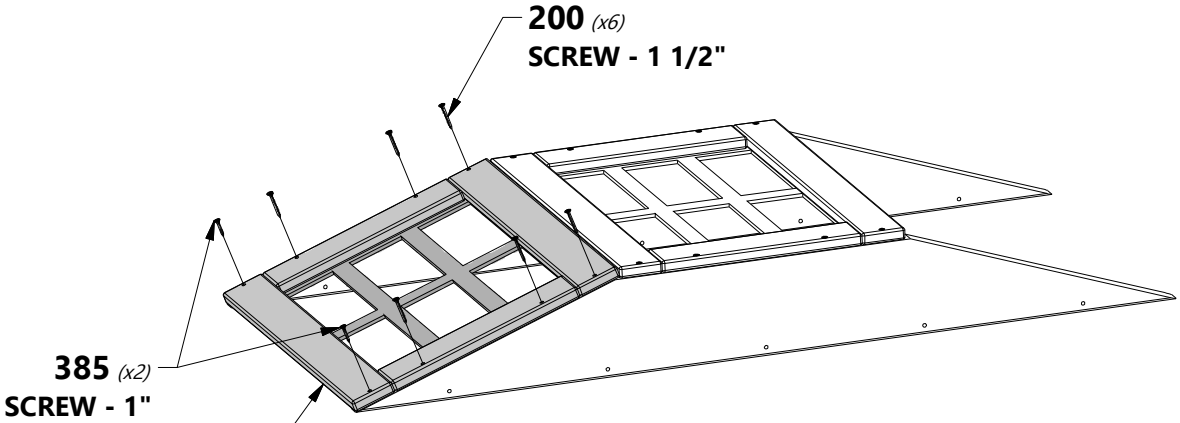

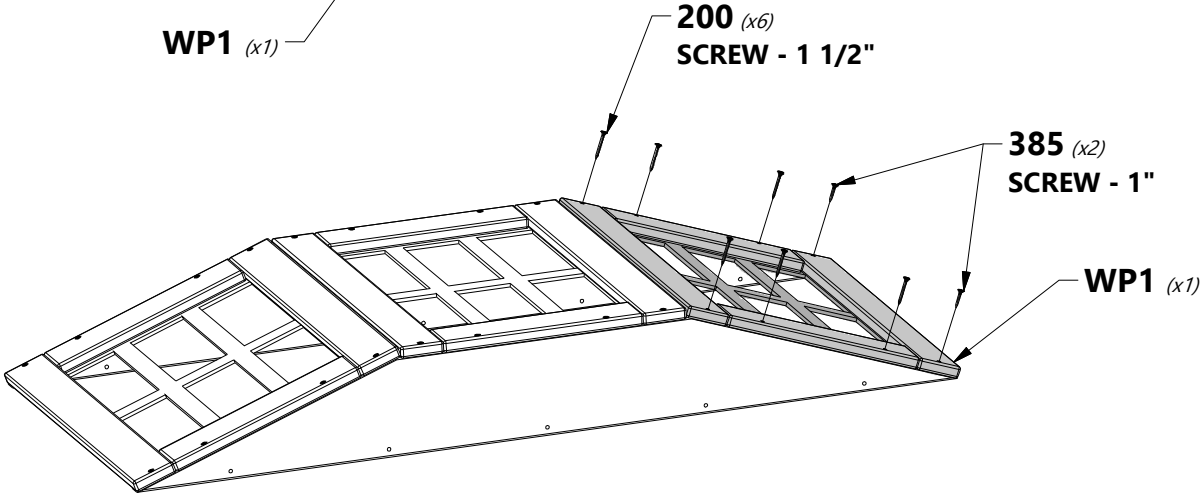

PORCH ROOF

STEP 1

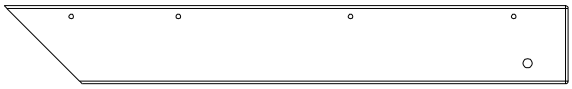

H20 (4) | **PORCH ROOF RAFTER - W4L12725**
1"x3 3/8"x24 1/2" (24x86x622)

H100483 (2) | **SCREW PFH BLK**
8x2 1/4

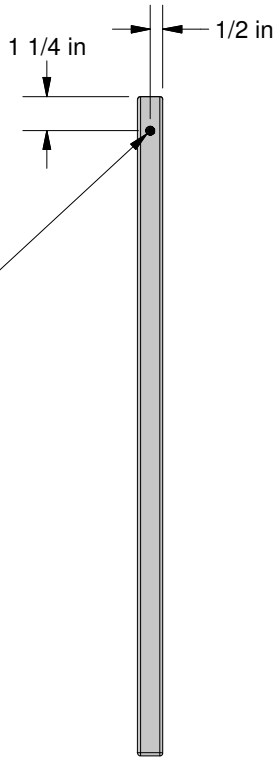

USING A 3/16" DRILL BIT, MARK AND DRILL A PILOT HOLE INTO 'H20' RAFTER TO PREVENT SPLITTING. ONLY DRILL THROUGH ONE RAFTER NOT BOTH.

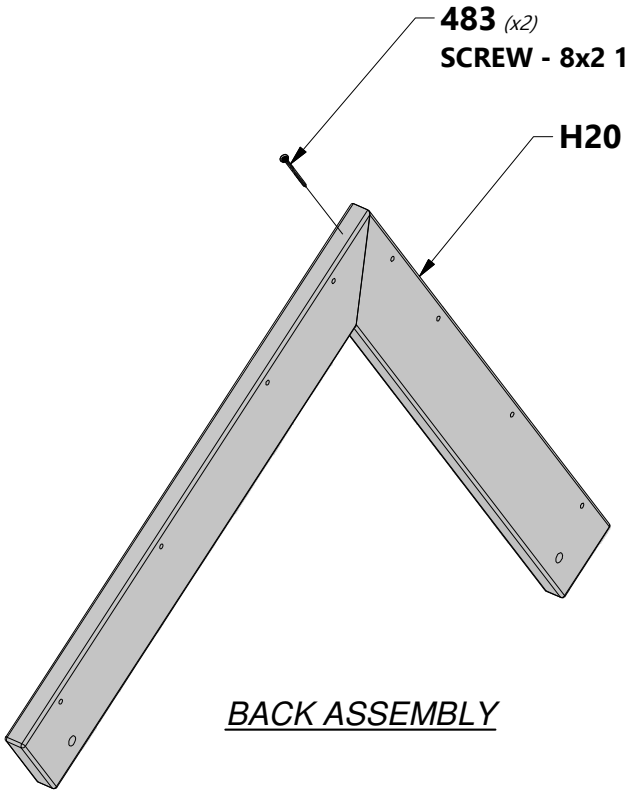

BACK ASSEMBLY

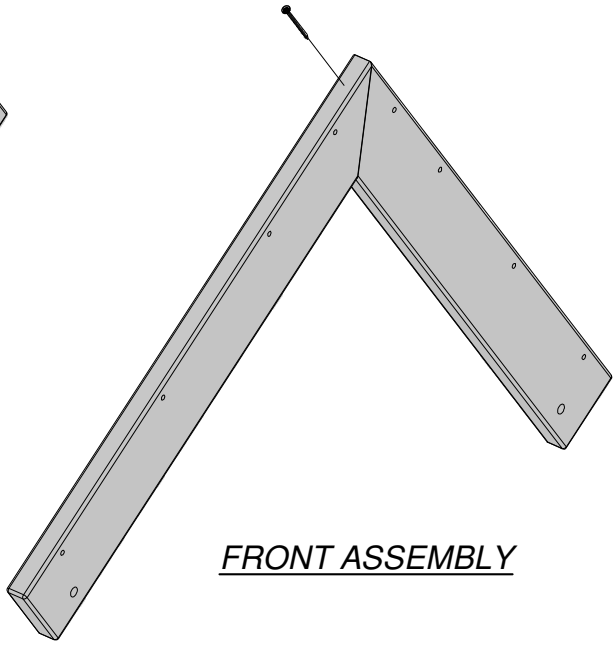

FRONT ASSEMBLY

PORCH ROOF

STEP 2

M19 (1) | **FRONT PORCH ROOF SUPPORT - W4L12760**
5/8"x3 3/8"x30 5/8" (16x86x779)

N8 (2) | **FRONT PORCH GABLE TRIM - W4L12782**
5/8"x2 3/8"x9 1/2" (16x60x241)

H100380 (6) | **SCREW PFH BLK**
8x1 1/8

A100164 (1) | **BYD ID TAG (LARGE) AGES 3-10**

N5 (1) | **FRONT PORCH GABLE TRIM - W4L12780**
5/8"x2 3/8"x15" (16x60x381)

H100202 (4) | **SCREW PWH BLK**
8x5/8

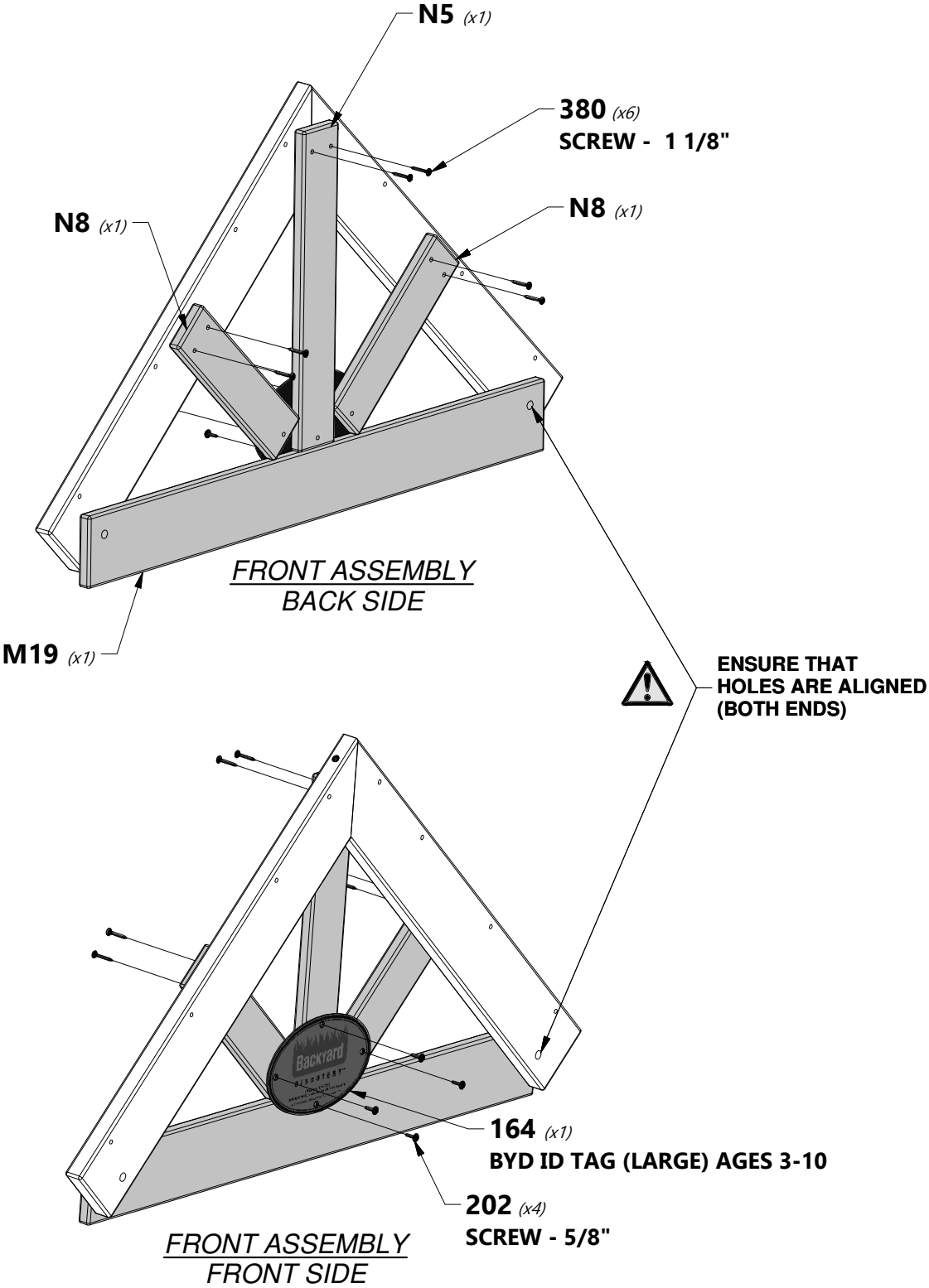

PORCH ROOF

STEP 3

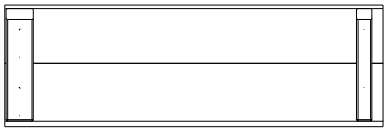

RP1 (1) | **LEFT PORCH PEAK ROOF PANEL - W2A02650**
1 5/8"x10 1/2"x32 7/8" (42x268x834)

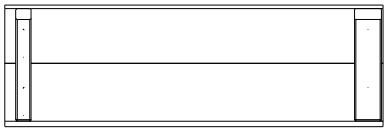

RP4 (1) | **RIGHT PORCH PEAK ROOF PANEL - W2A02653**
1 5/8"x10 1/2"x32 7/8" (42x268x834)

H100391 (8) | **SCREW PFH BLK**
8x2

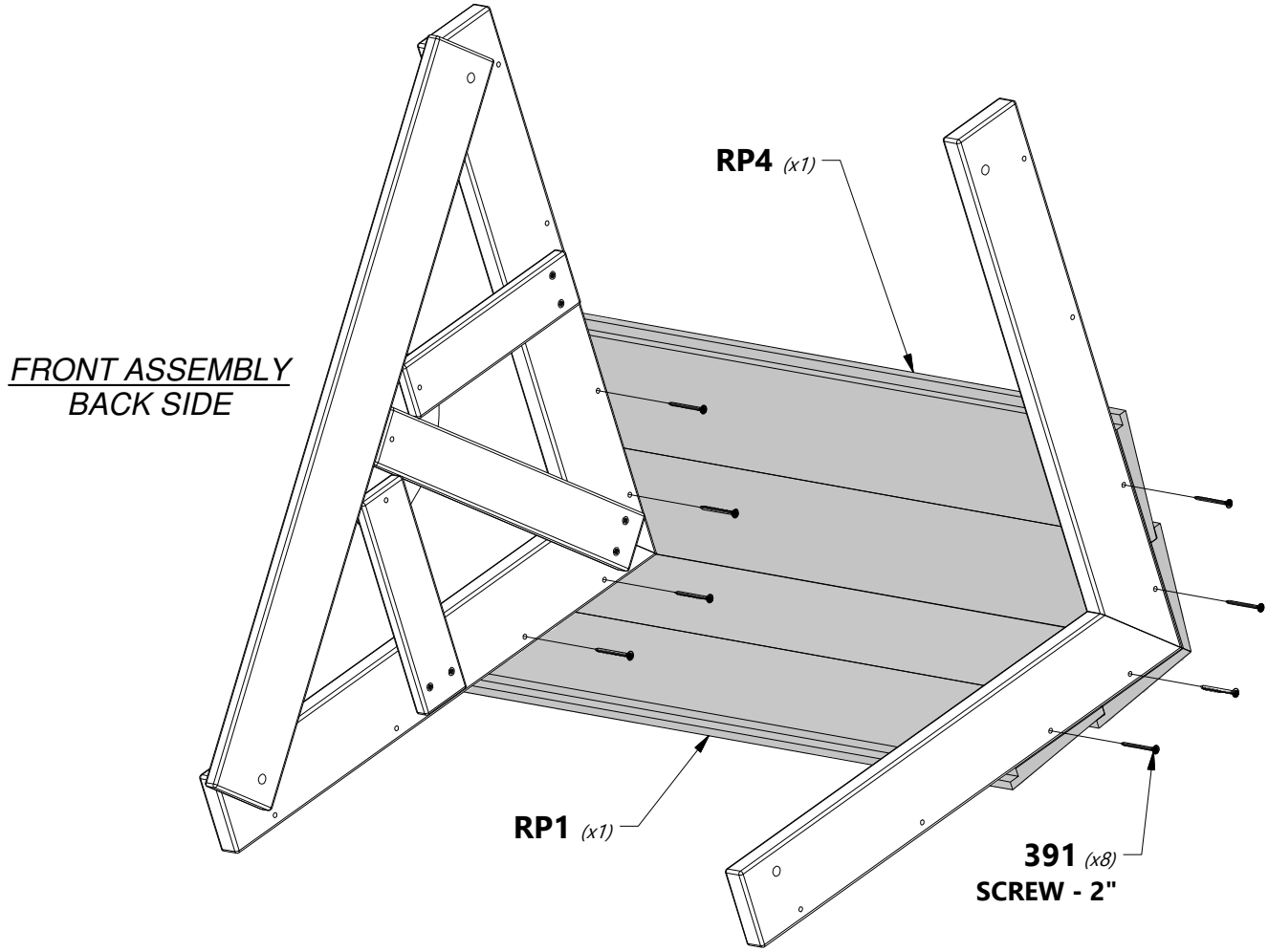

PORCH ROOF

STEP 4

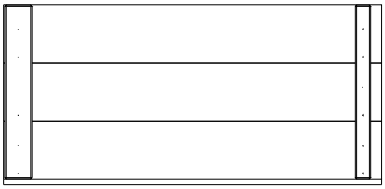

RP2 (1) | **LEFT PORCH ROOF PANEL - W2A02651**
1 5/8"x15 5/8"x32 7/8" (42x396x834)

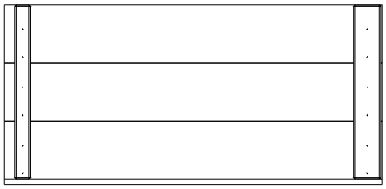

RP5 (1) | **RIGHT PORCH ROOF PANEL - W2A02654**
1 5/8"x15 5/8"x32 7/8" (42x396x834)

H100391 (8) | **SCREW PFH BLK**
8x2

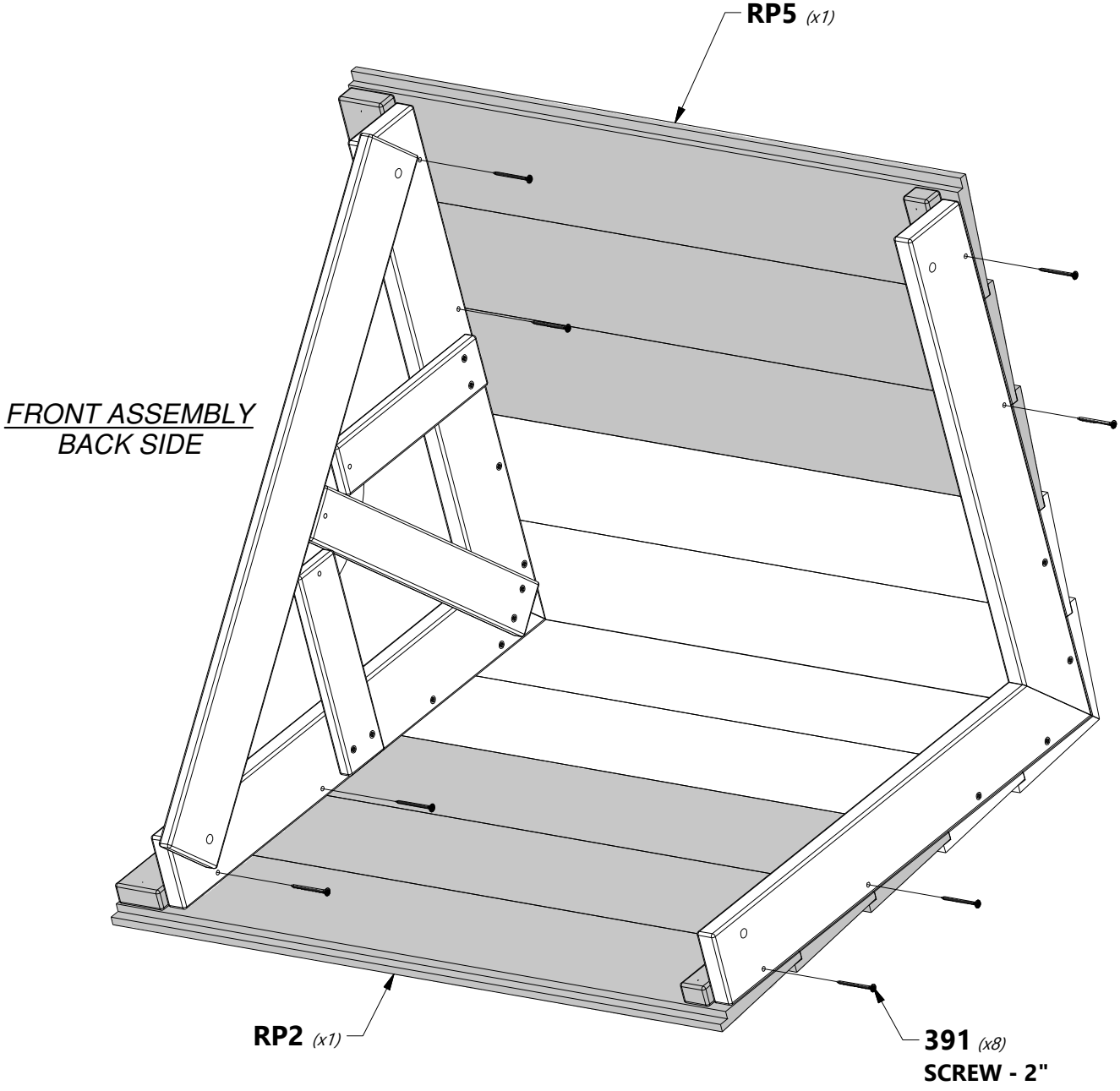

SWING BEAM

STEP 1

A2 (1) | **SB 9" BLOCK - W4L12790**
3 3/8"x5 1/4"x9" (86x134x228)

A1 (1) | **SWING BEAM - W4L12789**
3 3/8"x5 1/4"x89 1/2" (86x134x2274)

H100416 (10) | **BOLT WH BLK**
5/16x3

H100192 (10) | **NUT BARREL WH BLK**
5/16x7/8

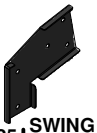

A100325 (1) | **SWING BEAM EXTENSION BRACKET-LEFT**

A100326 (1) | **SWING BEAM EXTENSION BRACKET-RIGHT**

A4M00993 (2) | **EXTENDED SWING BEAM BRACKET**

A2 *(x1)*

192 *(x10)*
NUT BARREL - 7/8"

A1 *(x1)*

993 *(x2)*
EXTENDED SWING BEAM BRACKET

416 *(x10)*
BOLT - 3"

DO NOT TIGHTEN BRACKET HARDWARE AT THIS TIME

325 *(x1)*
SWING BEAM EXTENSION BRACKET-LEFT

326 *(x1)*
SWING BEAM EXTENSION BRACKET-RIGHT

THIS EDGE UPWARDS

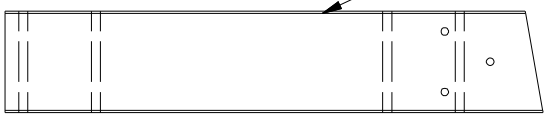

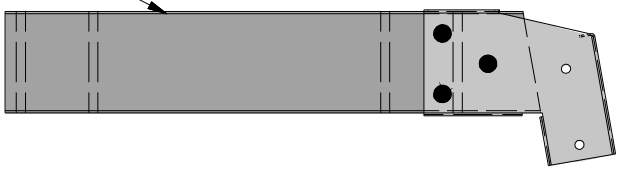

SWING BEAM

STEP 2

H100654 (12) | BOLT HEX 3/8x5-1/2

H100107 (12) | WASHER LOCK INT 10x18

H100102 (12) | WASHER FLAT 11x25

H100073 (12) | T-NUT 3/8

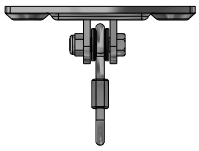

A4M00505 (6) | SWING HANGER

073 *(x12)*
T-NUT - 3/8"

505 *(x6)*
SWING HANGER

654 *(x12)*
BOLT - 5-1/2"

107 *(x12)*
WASHER - 10x18"

102 *(x12)*
WASHER - 11x25"

SWING BEAM

STEP 3

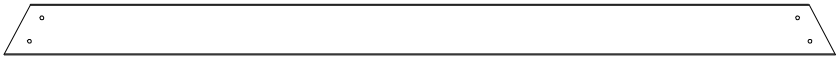

G8 (1) | **GROUND BOARD - W4L08134**
1"x5 1/4"x86 3/4" (24x134x2202)

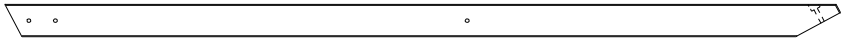

E4 (2) | **ANGLE BRACE - W4L13302**
1 3/8"x3 3/8"x87 1/8" (36x86x2212)

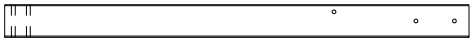

SP1 (1) | **SWING BEAM SUPPORT - W4L12791**
3 3/8"x3 3/8"x48 3/8" (86x86x1229)

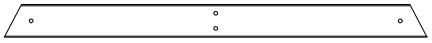

E50 (1) | **END SUPPORT - W4L08131**
1 3/8"x3 3/8"x44 1/8" (36x86x1120)

H100363 (1) | **BOLT WH BLK**
5/16X6

H100415 (2) | **BOLT WH BLK**
5/16x3 3/4

H100192 (7) | **NUT BARREL WH BLK**
5/16x7/8

H100205 (2) | **BOLT WH BLK**
5/16x2-1/4

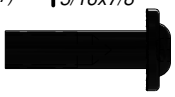

H100193 (2) | **NUT BARREL WH BLK**
5/16x1-1/2

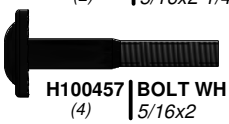

H100457 (4) | **BOLT WH BLK**
5/16x2

H100198 (9) | **WASHER LOCK EXT BLK**
8x19

H100199 (9) | **WASHER LOCK EXT BLK**
12x19

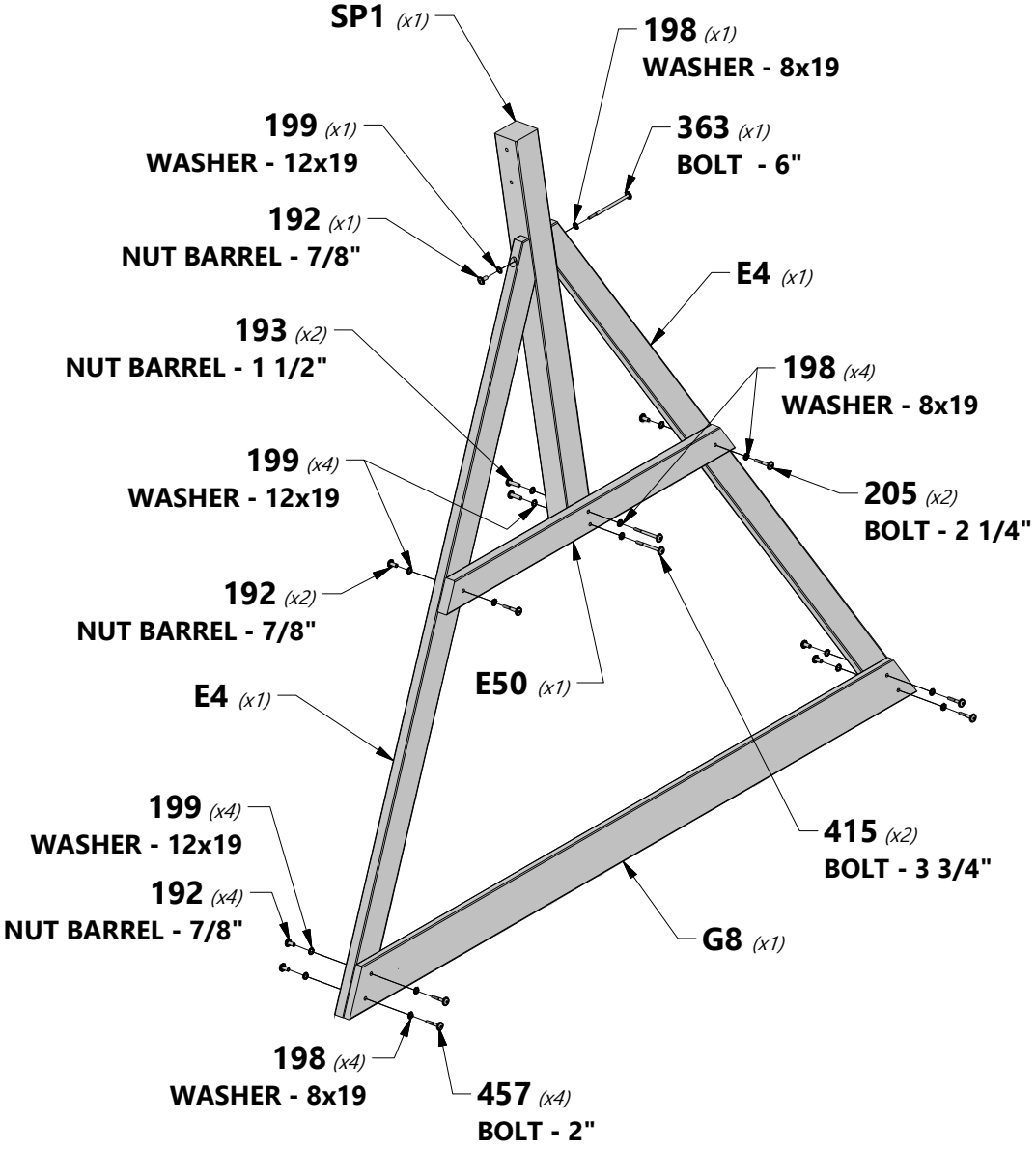

SWING BEAM

STEP 4

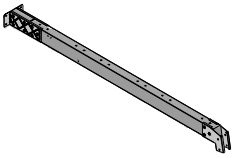

(1) **BEAM ASSEMBLY**

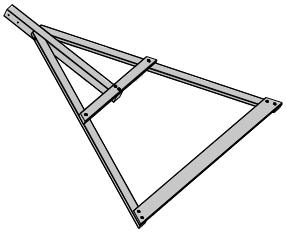

(1) **END ASSEMBLY**

H100416 *(2)* | **BOLT WH BLK** *5/16x3*

H100192 *(2)* | **NUT BARREL WH BLK** *5/16x7/8*

TIGHTEN ALL BRACKET HARDWARE AT THIS TIME.

192 *(x2)*
NUT BARREL - 7/8"

416 *(x2)*
BOLT - 3"

CROWS NEST

STEP 1

E3 (2) | **CROWS NEST FLOOR RAIL - W4L12690**
1 3/8"x3 3/8"x33 1/2" (36x86x852)

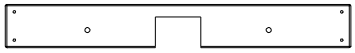

H19 (1) | **CROWS NEST FLOOR RAIL - W4L12724**
1"x3 3/8"x27" (24x86x686)

H100201 (4) | **SCREW PFH BLK**
8x2-1/2

H100379 (4) | **T-NUT BLK**
5/16

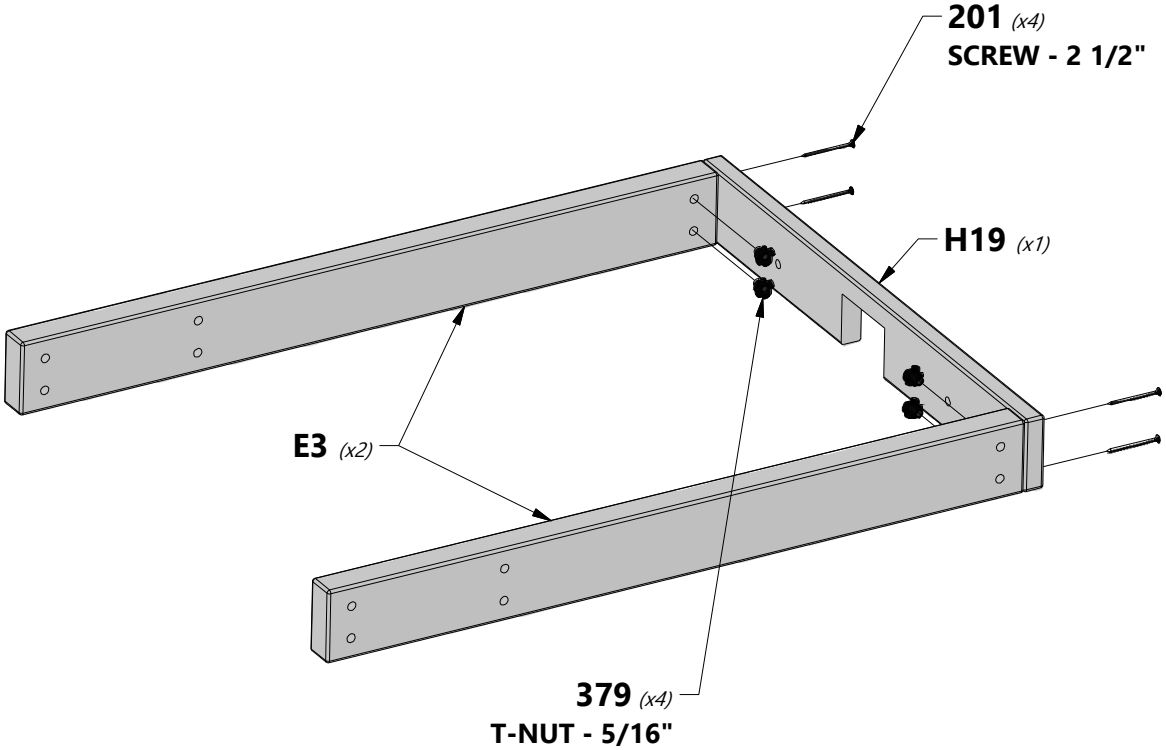

CROWS NEST

STEP 2

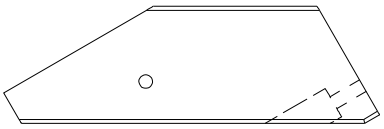

E6 (2) | **CROWS NEST DECK BRACE - W4L12691**
1 7/16"x3 3/8"x10 7/8" (36x86x276)

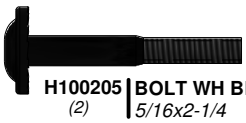

H100205 (2) | **BOLT WH BLK**
5/16x2-1/4

H100379 (2) | **T-NUT BLK**
5/16

H100198 (2) | **WASHER LOCK EXT BLK**
8x19

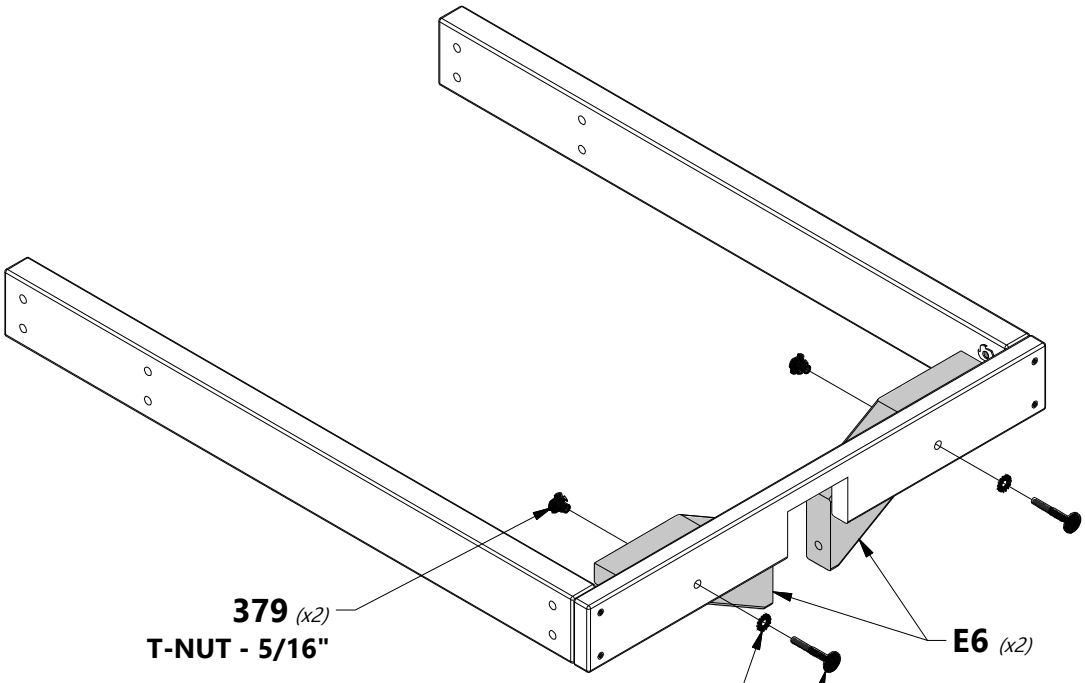

CROWS NEST

STEP 3

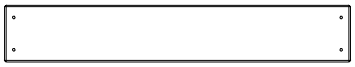

L1 (6) | **CROWS NEST FLOOR BOARD - W4L12742**
5/8"x4 3/8"x27" (16x112x686)

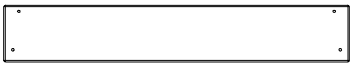

L2 (2) | **CROWS NEST FLOOR BOARD - W4L12705**
5/8"x4 3/8"x27" (16x112x686)

H100086 (30) | **SCREW PFH**
8x1 1/2

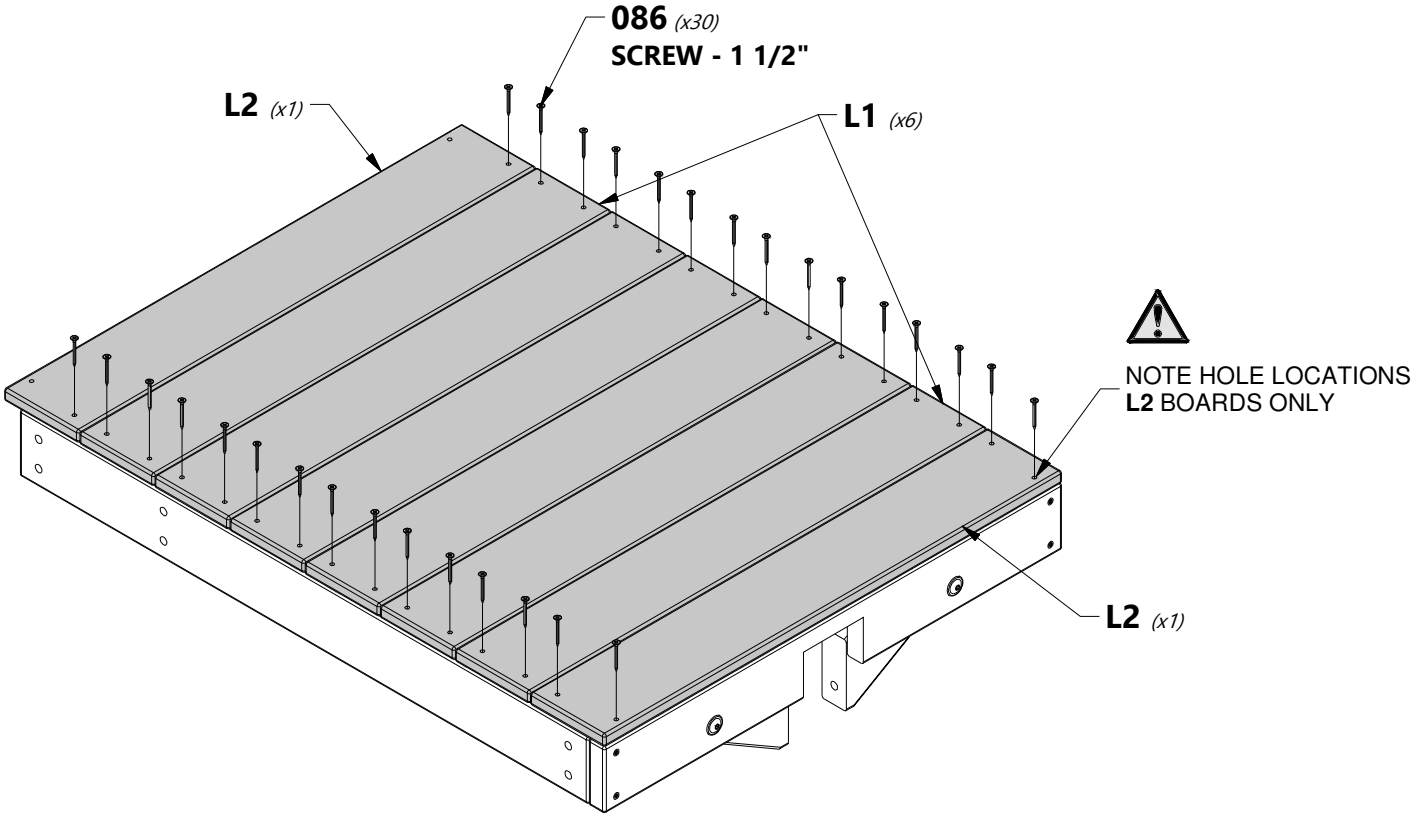

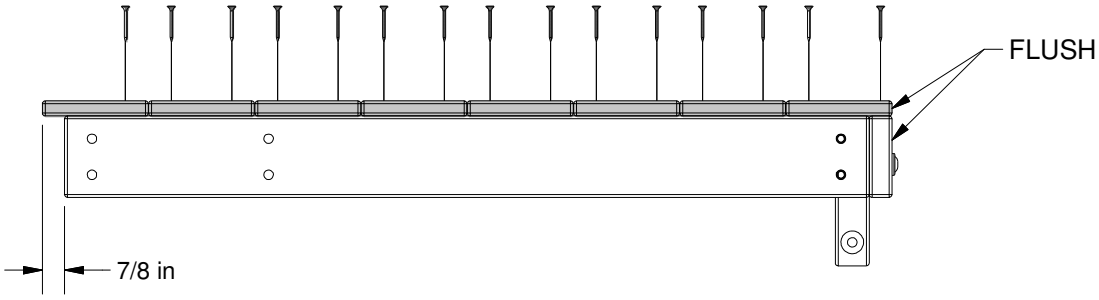

CROWS NEST

STEP 4

H21 (1) | **CROWS NEST FLOOR SUPPORT - W4L12726**
1"x3 3/8"x24 1/8" (24x86x614)

H100087 (2) | **SCREW PFH**
8x1 1/4

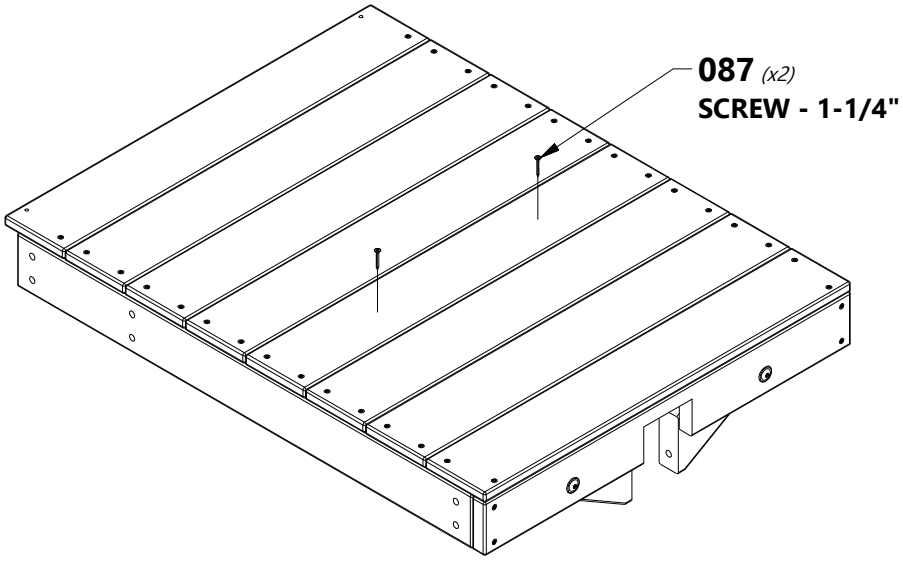

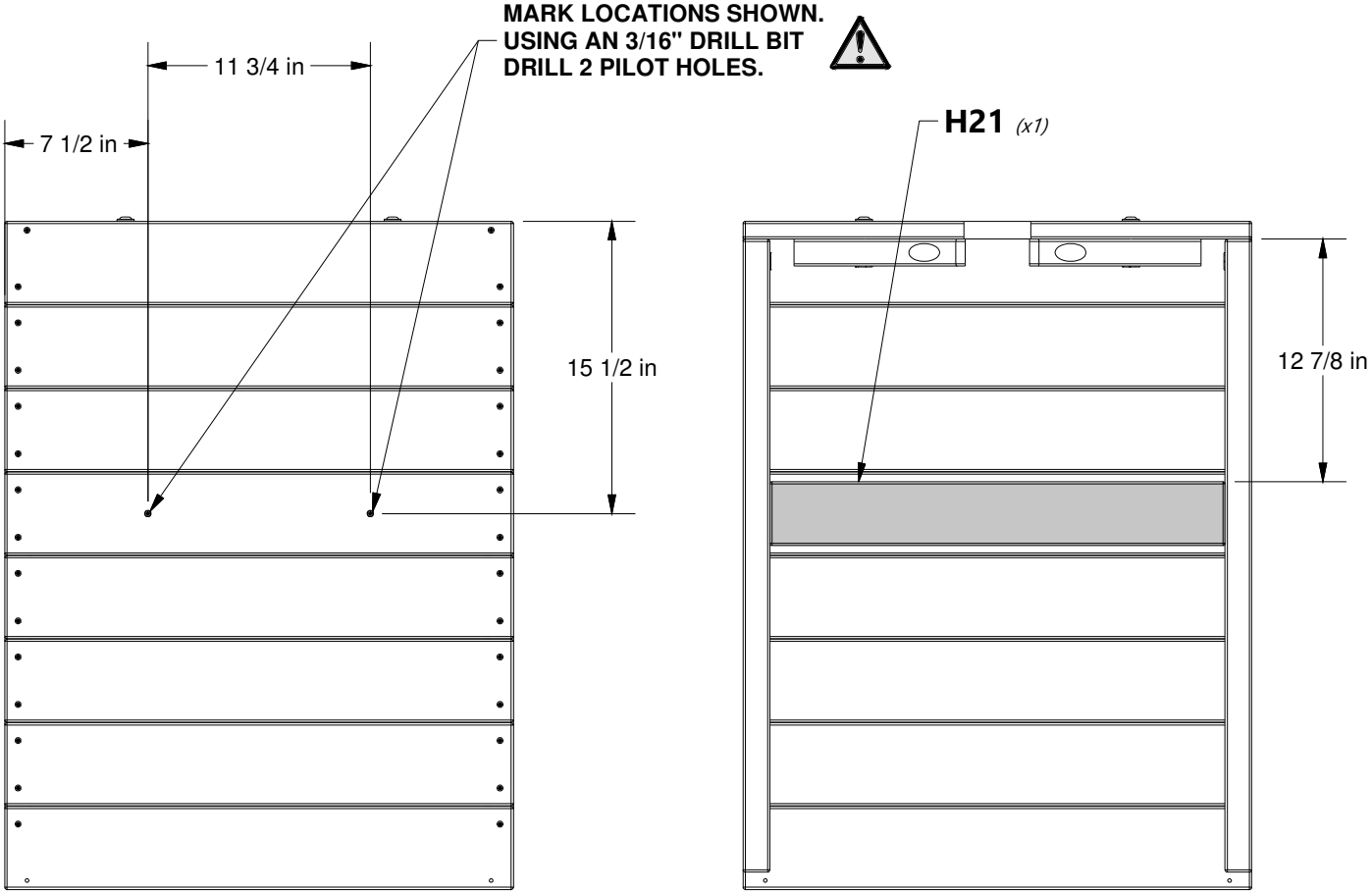

FORT ASSEMBLY

STEP 1

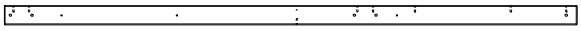

B1 (1) | **TOWER LEG - W4L12680**
3"x3"x89 1/2" (76x76x2274)

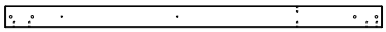

E1 (1) | **TOWER LEG - W4L12688**
1 3/8"x3 3/8"x59" (36x86x1500)

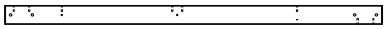

B3 (1) | **TOWER LEG - W4L12682**
3"x3"x59" (76x76x1500)

A4M01150 (1) | **VERTICAL ID PLATE**

G7 (1) | **BOTTOM FLOOR RAIL - W4L12704**
1"x5 1/4"x80" (24x134x2032)

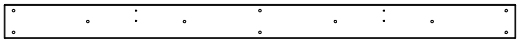

G1 (1) | **TOP FLOOR RAIL - W4L12698**
1"x5 1/4"x80" (24x134x2032)

H100415 (8) | **BOLT WH BLK**
5/16x3 3/4

H100205 (4) | **BOLT WH BLK**
5/16x2-1/4

H100198 (12) | **WASHER LOCK EXT BLK**
8x19

H100379 (12) | **T-NUT BLK**
5/16

H100360 (4) | **SCREW PPH WZ**
4x1/2

G1 *(x1)*

NOTE HOLE LOCATIONS

NOTE HOLE LOCATIONS

B1 *(x1)*

NOTE HOLE LOCATIONS

NOTE HOLE LOCATIONS

B3 *(x1)*

2 in

E1 *(x1)*

150 *(x1)*
VERTICAL ID PLATE

360 *(x4)*
SCREW - 4x1/2"

NOTE HOLE LOCATIONS

G7 *(x1)*

205 *(x4)*
BOLT - 2 1/4"

379 *(x12)*
T-NUT - 5/16"

198 *(x12)*
WASHER - 8x19

415 *(x8)*
BOLT - 3 3/4"

FORT ASSEMBLY

STEP 2

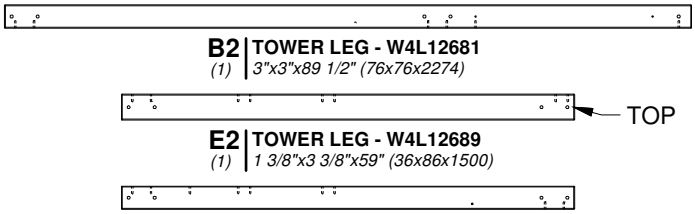

B2 (1) | **TOWER LEG - W4L12681**
3"x3"x89 1/2" (76x76x2274)

E2 (1) | **TOWER LEG - W4L12689**
1 3/8"x3 3/8"x59" (36x86x1500)

B4 (1) | **TOWER LEG - W4L12683**
3"x3"x59" (76x76x1500)

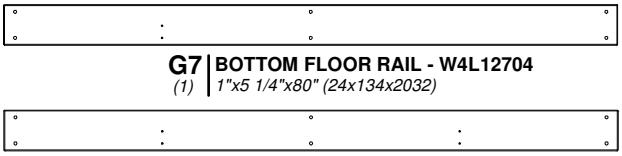

G7 (1) | **BOTTOM FLOOR RAIL - W4L12704**
1"x5 1/4"x80" (24x134x2032)

G2 (1) | **TOP FLOOR RAIL - W4L12699**
1"x5 1/4"x80" (24x134x2032)

H100415 (8) | **BOLT WH BLK**
5/16x3 3/4

H100205 (4) | **BOLT WH BLK**
5/16x2-1/4

H100198 (12) | **WASHER LOCK EXT BLK**
8x19

H100379 (12) | **T-NUT BLK**
5/16

415 *(x8)*
BOLT - 3 3/4"

198 *(x12)*
WASHER - 8x19

205 *(x4)*
BOLT - 2 1/4"

G2 *(x1)*

379 *(x12)*
T-NUT - 5/16"

B4 *(x1)*

NOTE HOLE LOCATIONS

NOTE HOLE LOCATIONS

NOTE HOLE LOCATIONS

E2 *(x1)*

B2 *(x1)*

NOTE HOLE LOCATIONS

G7 *(x1)*

FORT ASSEMBLY

STEP 3

H28 | **FRONT WALL RAIL - W4L12731**
(1) | *1"x3 3/8"x60 1/2" (24x86x1537)*

G6 | **FLOOR RAIL - W4L12703**
(1) | *1"x5 1/4"x60 1/2" (24x134x1537)*

G3 | **FLOOR RAIL - W4L12700**
(1) | *1"x5 1/4"x60 1/2" (24x134x1537)*

H100197 | **LAG SCREW WH BLK**
(8) | *5/16x2 1/2*

H100458 | **LAG SCREW WH BLK**
(2) | *5/16x2*

H100198 | **WASHER LOCK EXT BLK**
(10) | *8x19*

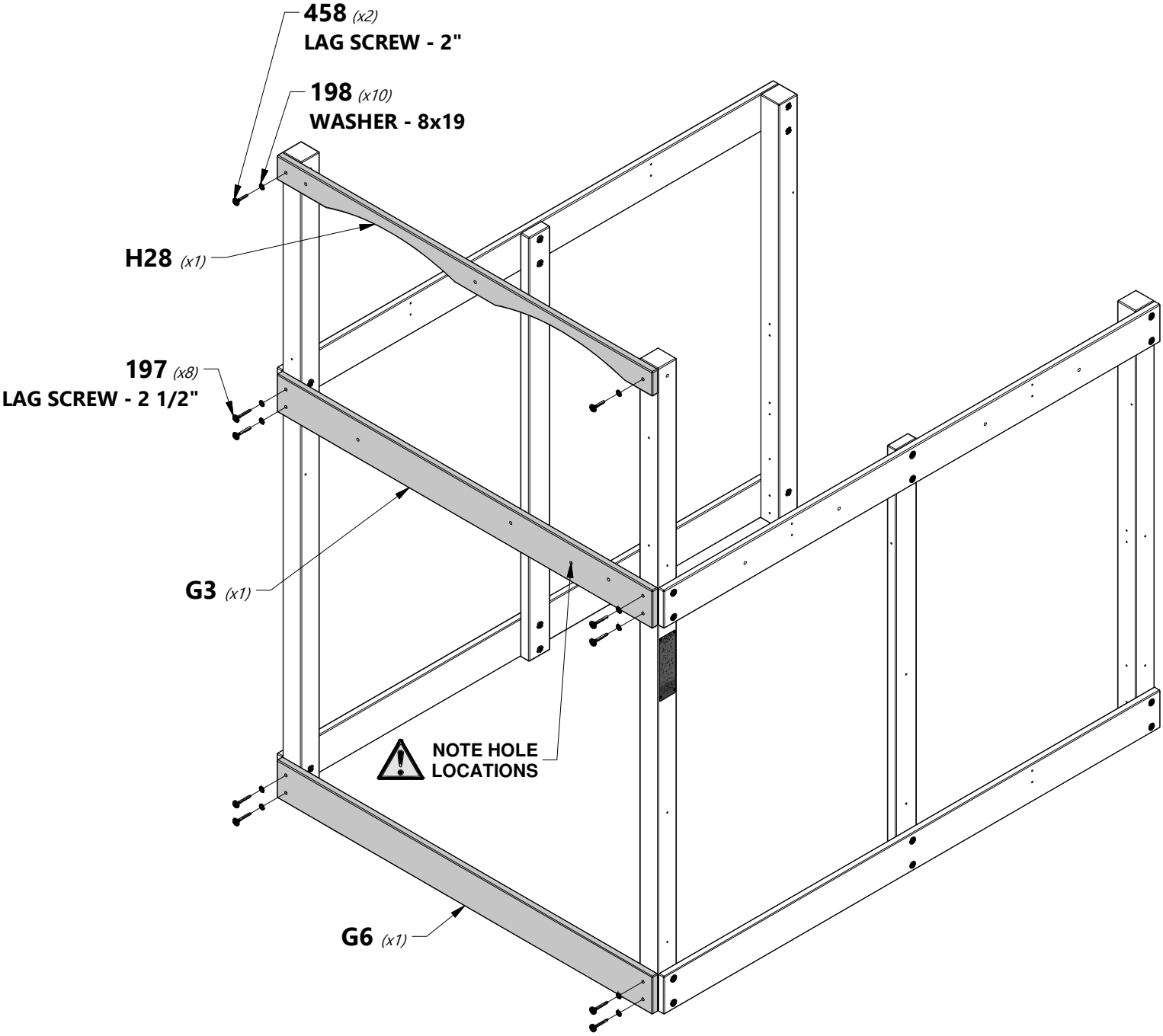

FORT ASSEMBLY

STEP 4

G4 (1) | **FLOOR RAIL - W4L12701**
1"x5 1/4"x60 1/2" (24x134x1537)

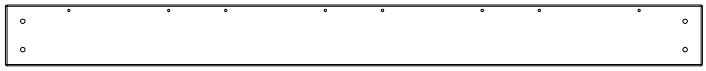

K2 (1) | **FLOOR RAIL - W4L12738**
5/8"x5 1/4"x60 1/2" (16x134x1537)

H100197 (4) | **LAG SCREW WH BLK**
5/16x2 1/2

H100458 (4) | **LAG SCREW WH BLK**
5/16x2

H100198 (8) | **WASHER LOCK EXT BLK**
8x19

198 *(x4)*
WASHER - 8x19

197 *(x4)*
LAG SCREW - 2 1/2"

G4 *(x1)*

458 *(x4)*
LAG SCREW - 2"

198 *(x4)*
WASHER - 8x19

NOTE HOLE LOCATIONS

K2 *(x1)*

FORT ASSEMBLY

STEP 5

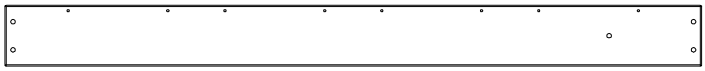

K3 (1) | **FLOOR RAIL - W4L12739**
5/8"x5 1/4"x60 1/2" (16x134x1537)

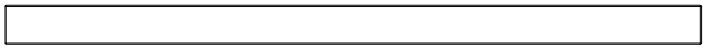

H26 (1) | **FLOOR JOIST - W4L12729**
1"x3 3/8"x60 1/2" (24x86x1537)

H100458 (4) | **LAG SCREW WH BLK**
5/16x2

H100201 (4) | **SCREW PFH BLK**
8x2-1/2

H100198 (4) | **WASHER LOCK EXT BLK**
8x19

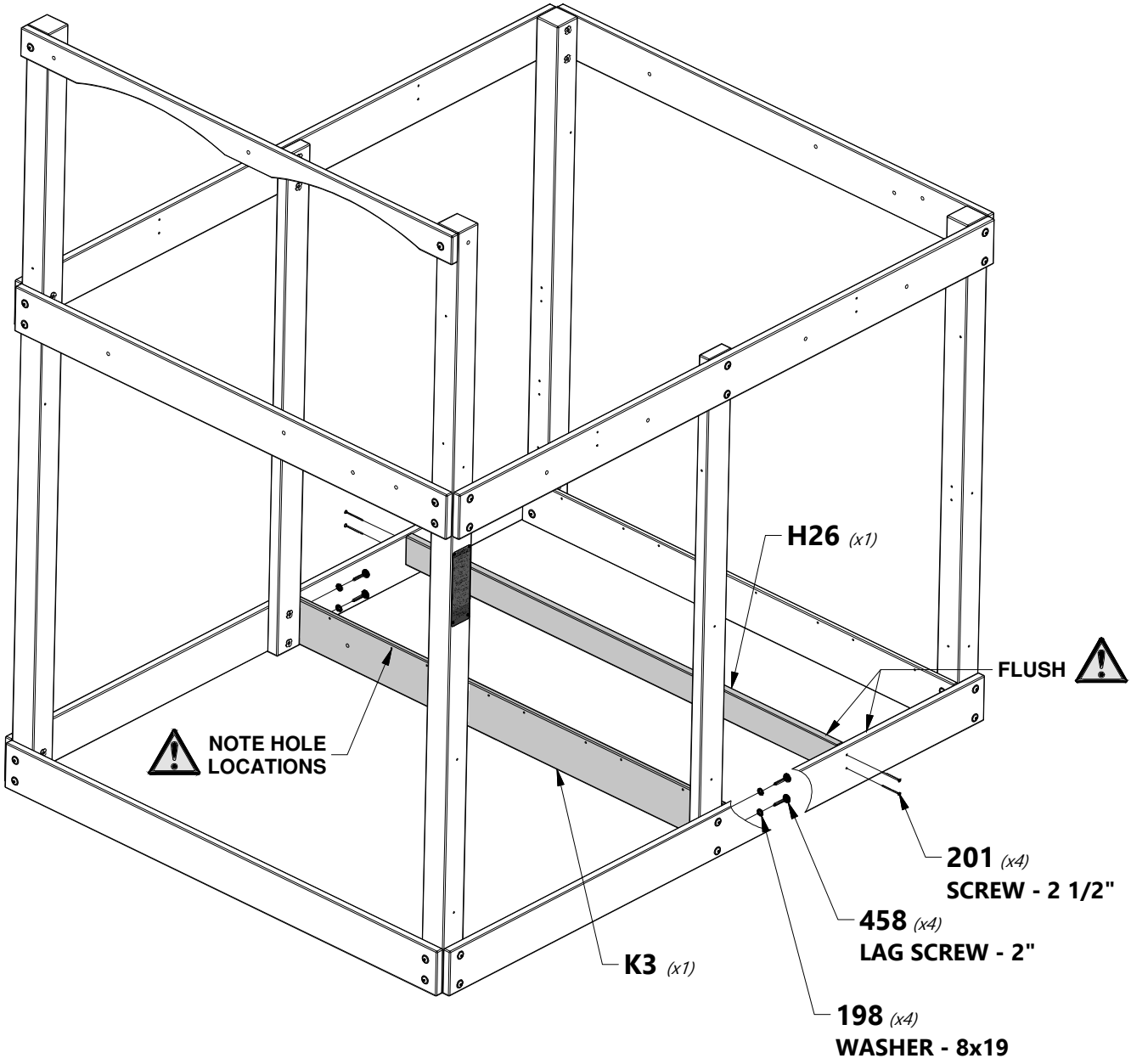

FORT ASSEMBLY

STEP 6

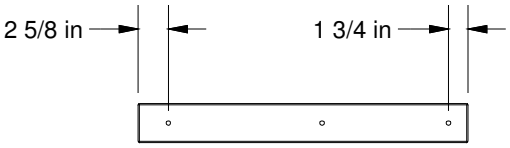

H27 (1) | **PICNIC TABLE SUPPORT - W4L12730**
1"x3 3/8"x28 5/8" (24x86x728)

H100407 (1) | **BOLT WH BLK**
5/16x1 1/2

H100198 (1) | **WASHER LOCK EXT BLK**
8x19

H100379 (1) | **T-NUT BLK**
5/16

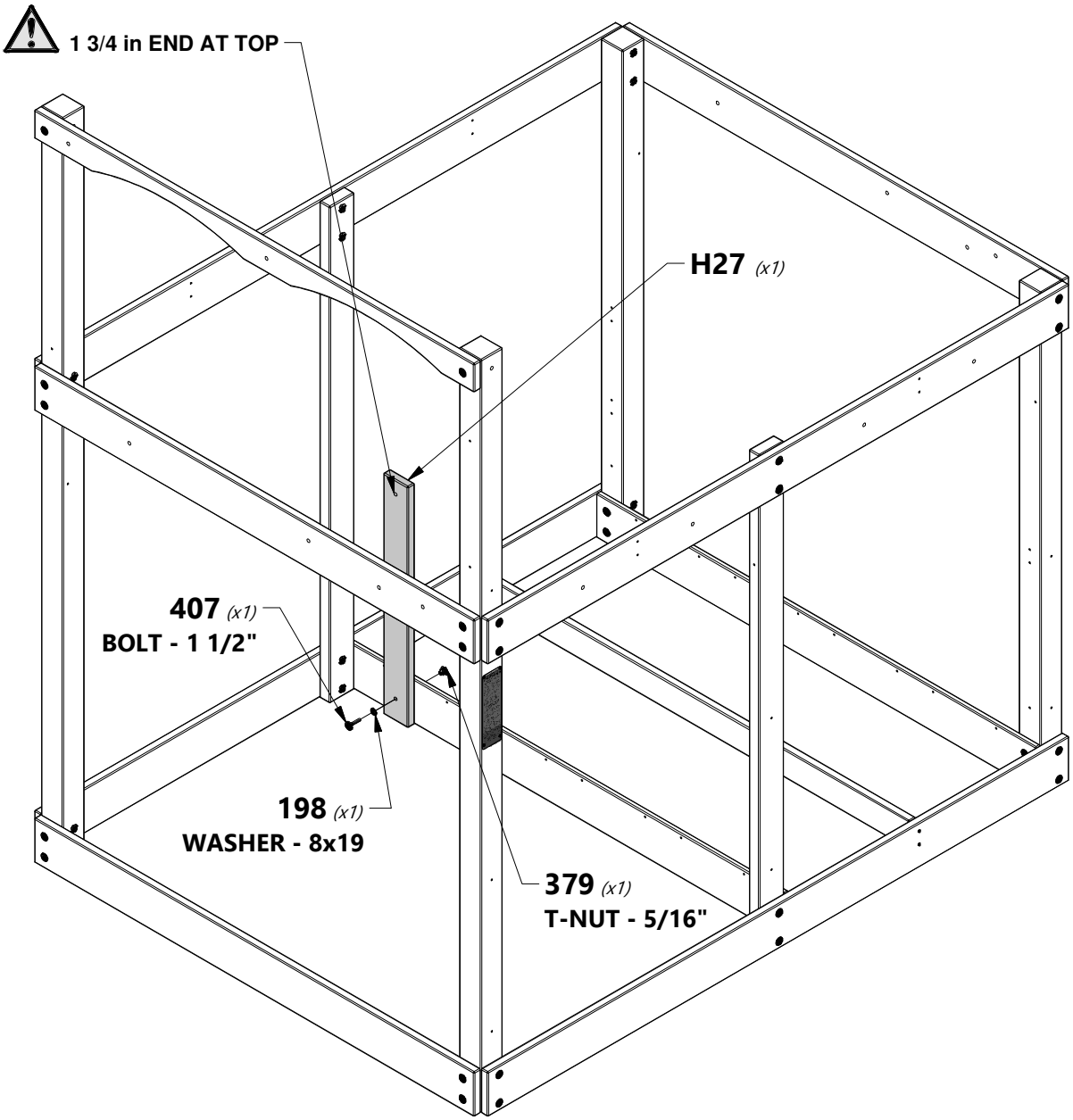

FORT ASSEMBLY

STEP 7

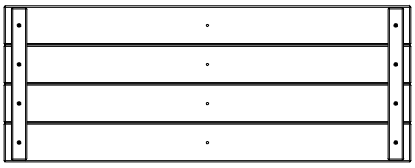

FP1 (4) | **BOTTOM FLOOR PANEL - W2A02648**
1 5/8"x13 1/2"x35 3/8" (40x344x897)

Y2 (2) | **BOTTOM FLOOR BOARD - W4L12786**
5/8"x4"x35 1/4" (16x102x895)

H100086 (22) | **SCREW PFH**
8x1 1/2

H100200 (16) | **SCREW PFH BLK**
8x1 1/2

Y2 *(x1)*

FP1 *(x4)*

086 *(x22)*
SCREW - 1 1/2"

Y2 *(x1)*

SPACE BOARDS & PANELS EVENLY.

200 *(x16)*
SCREW - 1 1/2"

FORT ASSEMBLY

STEP 8

M3 (1) | **BOTTOM WALL RAIL - W4L12745**
5/8"x3 3/8"x60 1/2" (16x86x1537)

H3 (1) | **PICNIC TABLE RAIL - W4L12708**
1"x3 3/8"x67 1/4" (24x86x1708)

H100197 (4) | **LAG SCREW WH BLK**
5/16x2 1/2

H100198 (6) | **WASHER LOCK EXT BLK**
8x19

H100458 (2) | **LAG SCREW WH BLK**
5/16x2

NOTE ANGLE CUT FACES DOWNWARD

H3 *(x1)*

197 *(x4)*
LAG SCREW - 2 1/2"

198 *(x4)*
WASHER - 8x19

M3 *(x1)*

198 *(x2)*
WASHER - 8x19

458 *(x2)*
LAG SCREW - 2"

FORT ASSEMBLY

STEP 9

M27 *(8)* | **BOTTOM WALL BOARD - W4L12766**
5/8"x3 3/8"x21 3/8" (16x86x544)

H100088 *(32)* | **SCREW PFH**
8x1 1/8

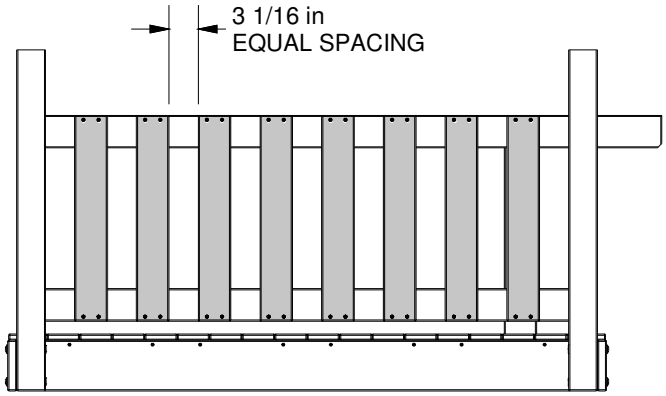

NOTE:
SPACING NOT LESS THAN 3 1/16 in,
& NO MORE THAN 3 1/4 in.

088 *(x32)*
SCREW - 1 1/8"

M27 *(x8)*

FORT ASSEMBLY

STEP 10

M2 (2) | **BOTTOM WALL RAIL - W4L12744**
5/8"x3 3/8"x80" (16x86x2032)

H100458 (4) | **LAG SCREW WH BLK**
5/16x2

H100198 (6) | **WASHER LOCK EXT BLK**
8x19

H100471 (2) | **LAG SCREW WH BLK**
5/16x1 1/2

M2 *(x2)*

471 *(x2)*
LAG SCREW - 1 1/2"

458 *(x4)*
LAG SCREW - 2"

198 *(x6)*
WASHER - 8x19

STEP 11

M27 (10) | **BOTTOM WALL BOARD - W4L12766**
5/8"x3 3/8"x21 3/8" (16x86x544)

H100088 (40) | **SCREW PFH**
8x1 1/8

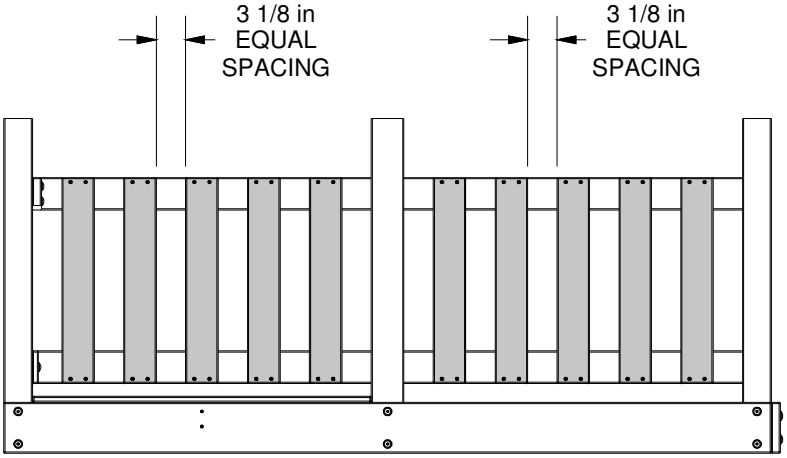

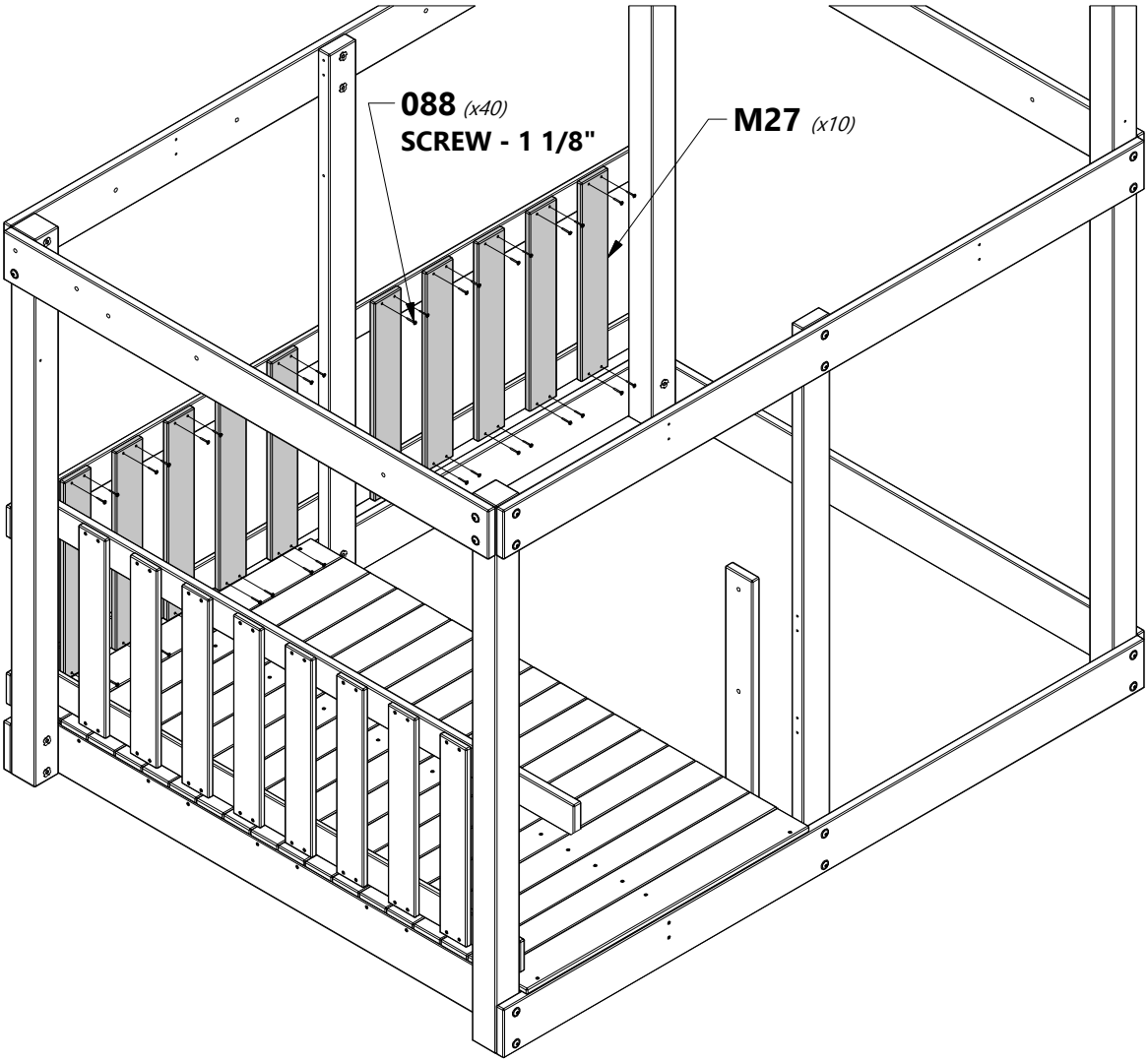

FORT ASSEMBLY

STEP 12

H16 (1) | **PICNIC TABLE SEAT RAIL - W4L12721**
1"x3 3/8"x17 1/2" (24x86x444)

H100197 (2) | **LAG SCREW WH BLK**
5/16x2 1/2

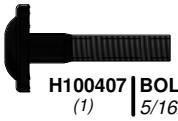

H100407 (1) | **BOLT WH BLK**
5/16x1 1/2

H100198 (3) | **WASHER LOCK EXT BLK**
8x19

H100379 (1) | **T-NUT BLK**
5/16

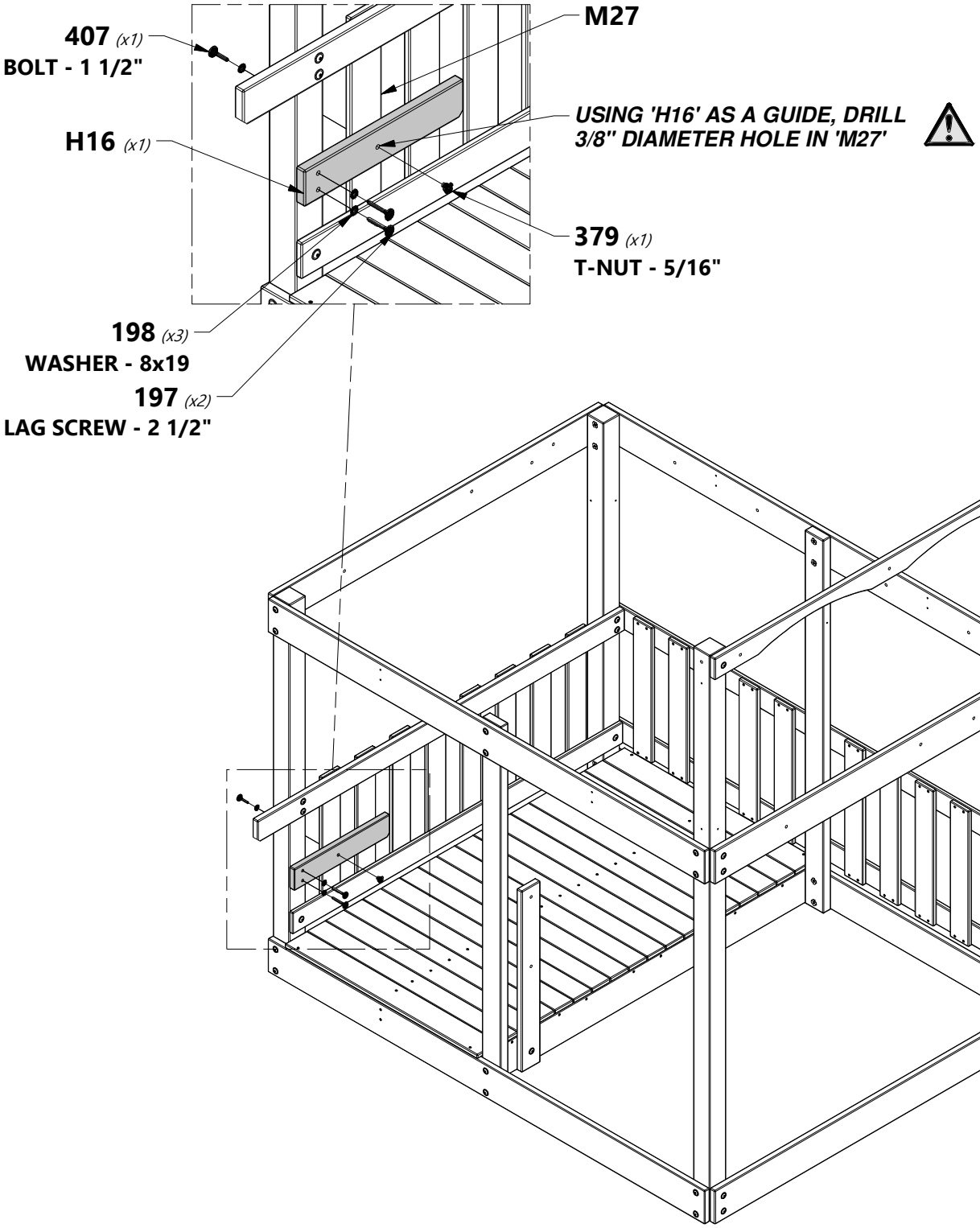

FORT ASSEMBLY

STEP 13

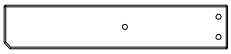

H17 (1) | **PICNIC TABLE SEAT RAIL - W4L12722**
1"x3 3/8"x17 1/2" (24x86x444)

H100197 (2) | **LAG SCREW WH BLK**
5/16x2 1/2

H100378 (1) | **BOLT WH BLK**
5/16x1 3/4

H100198 (3) | **WASHER LOCK EXT BLK**
8x19

H100379 (1) | **T-NUT BLK**
5/16

H17 *(x1)*

379 *(x1)*
T-NUT - 5/16"

378 *(x1)*
BOLT - 1 3/4"

197 *(x2)*
LAG SCREW - 2 1/2"

198 *(x3)*
WASHER - 8x19

FORT ASSEMBLY

STEP 14

H15 (2) | **PICNIC TABLE SEAT - W4L12720**
1"x3 3/8"x35 3/8" (24x86x897)

H100111 (8) | **SCREW PFH**
8x2

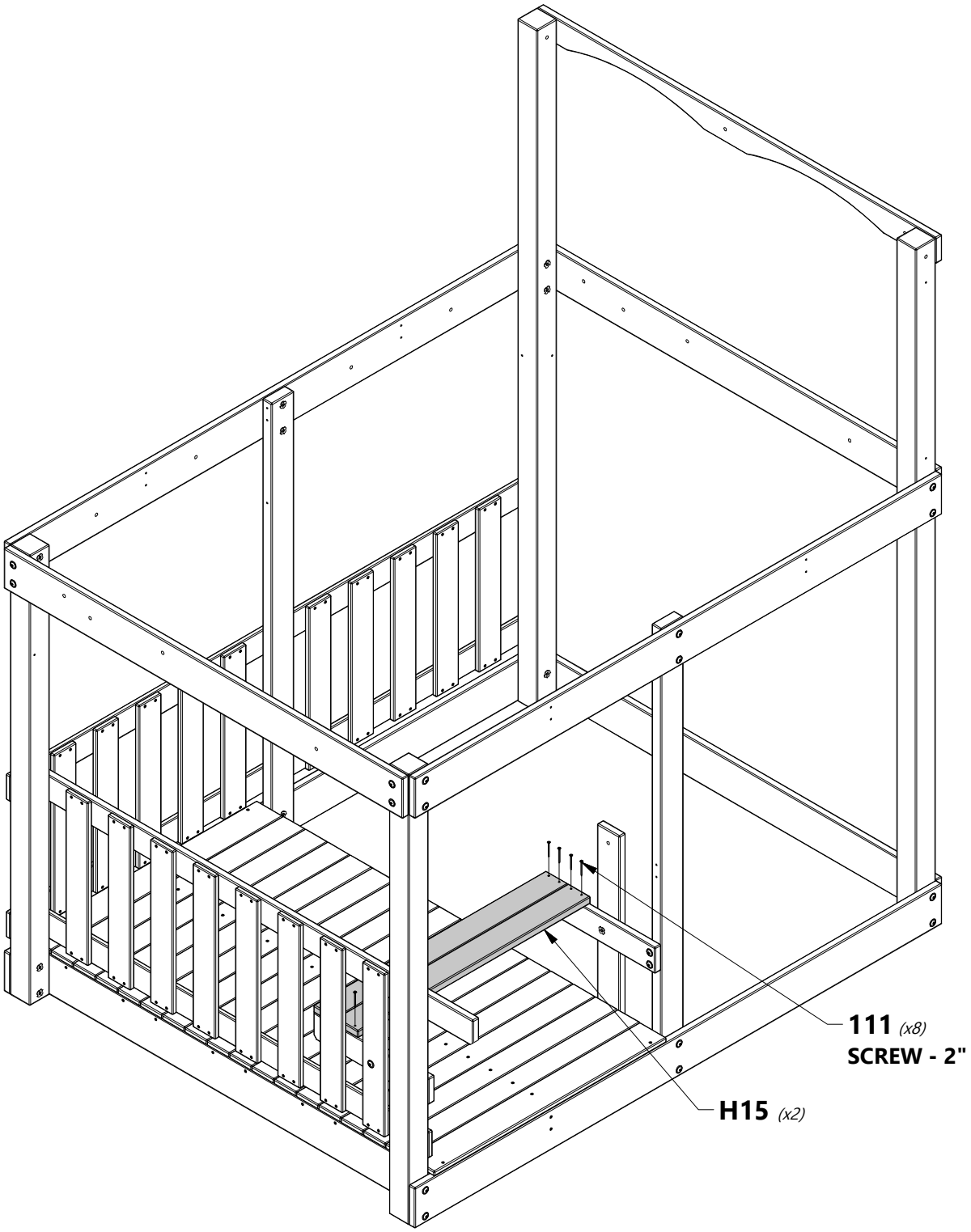

FORT ASSEMBLY

STEP 15

H24 (1) | **PICNIC TABLE TOP SUPPORT - W4L12727**
1"x3 3/8"x16 1/2" (24x86x418)

H100378 (1) | **BOLT WH BLK**
5/16x1 3/4

H100197 (2) | **LAG SCREW WH BLK**
5/16x2 1/2

H100198 (3) | **WASHER LOCK EXT BLK**
8x19

H100379 (1) | **T-NUT BLK**
5/16

379 *(x1)*
T-NUT - 5/16"

198 *(x1)*
WASHER - 8x19

378 *(x1)*
BOLT - 1 3/4"

H24 *(x1)*

198 *(x2)*
WASHER - 8x19

197 *(x2)*
LAG SCREW - 2 1/2"

STEP 16

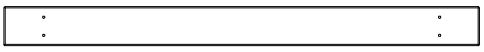

M13 (3) | **PICNIC TABLE TOP - W4L12755**
5/8"x3 3/8"x41 1/4" (16x86x1049)

M16 (1) | **CENTER PICNIC TABLE TOP - W4L12757**
5/8"x3"x38 1/4" (16x76x973)

H100086 (20) | **SCREW PFH**
8x1 1/2

M10 (1) | **PICNIC TABLE TOP - W4L12793**
5/8"x3 3/8"x41 1/4" (16x86x1049)

M30 (1) | **PICNIC TABLE TOP CLEAT - W4L12767**
5/8"x3 3/8"x16" (16x86x406)

H100088 (5) | **SCREW PFH**
8x1 1/8

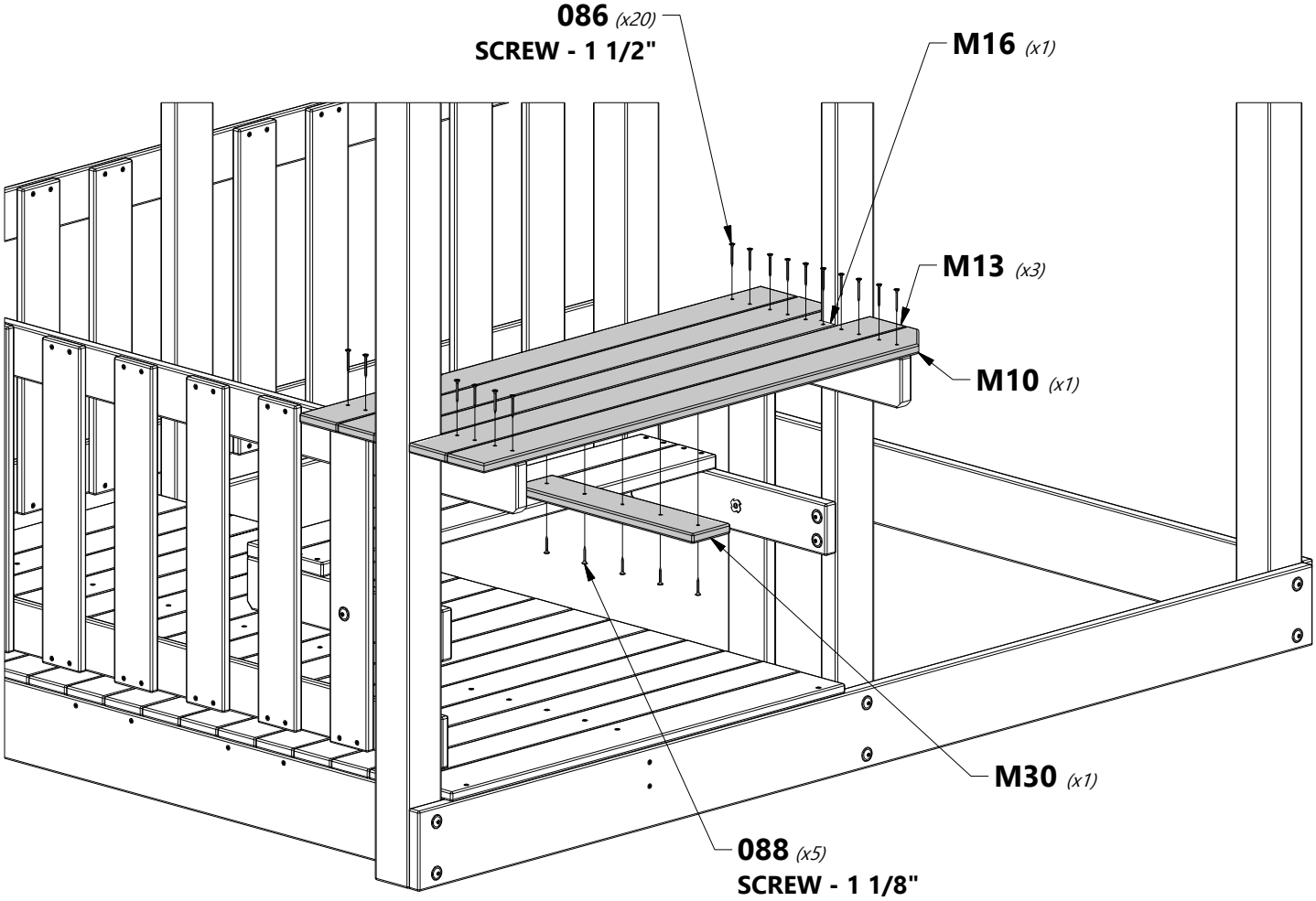

STEP 17

H25 (2) | **TOP FLOOR SUPPORT - W4L12728**
1"x3 3/8"x3" (24x86x76)

H100391 (4) | **SCREW PFH BLK**
8x2

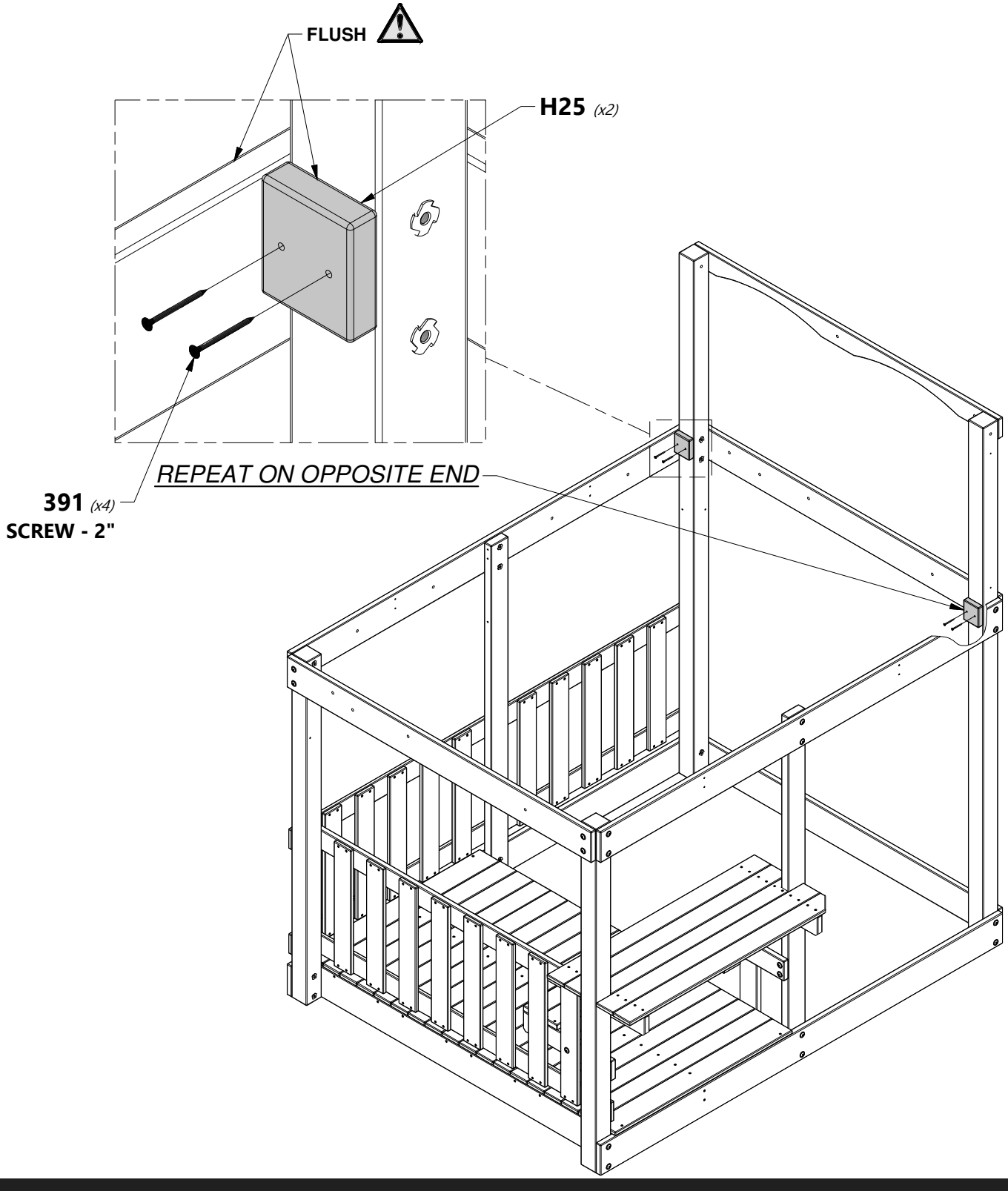

FORT ASSEMBLY

STEP 18

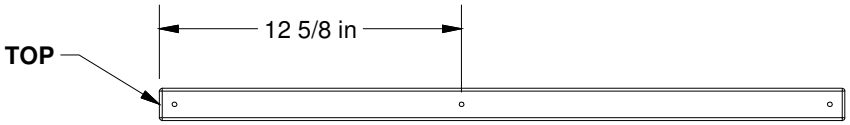

O2 (1) | **SAFETY BOARD - W4L12784**
5/8"x1 3/8"x28 5/8" (16x34x726)

H100380 (3) | **SCREW PFH BLK**
8x1 1/8

380 *(x3)*
SCREW - 1 1/8"

TOP

NOTE HOLE LOCATIONS

O2 *(x1)*
CENTER IN OPENING

FORT ASSEMBLY

STEP 19

E5 (8) | **DECK BRACE - W4L12692**
1 7/16"x3 3/8"x20" (36x86x508)

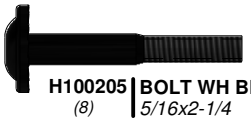

H100205 (8) | **BOLT WH BLK**
5/16x2-1/4

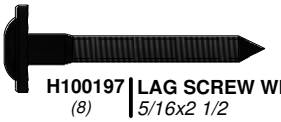

H100197 (8) | **LAG SCREW WH BLK**
5/16x2 1/2

H100198 (16) | **WASHER LOCK EXT BLK**
8x19

H100379 (8) | **T-NUT BLK**
5/16

NOTE ORIENTATION OF T-NUTS

E5 *(x8)*

379 *(x8)*
T-NUT - 5/16"

198 *(x8)*
WASHER - 8x19

205 *(x8)*
BOLT - 2 1/4"

198 *(x8)*
WASHER - 8x19

197 *(x8)*
LAG SCREW - 2 1/2"

STEP 20

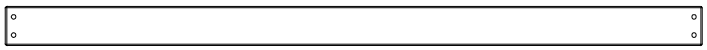

H5 (1) | **FLOOR RAIL - W4L12710**
1"x3 3/8"x60 1/2" (24x86x1537)

H26 (2) | **FLOOR JOIST - W4L12729**
1"x3 3/8"x60 1/2" (24x86x1537)

H100458 (4) | **LAG SCREW WH BLK**
5/16x2

H100198 (4) | **WASHER LOCK EXT BLK**
8x19

H100201 (8) | **SCREW PFH BLK**
8x2-1/2

NOTE:
FLUSH TOPS OF BOARDS.
ALL PLACES.

201 *(x8)*
SCREW - 2 1/2"

198 *(x4)*
WASHER - 8x19

458 *(x4)*
LAG SCREW - 2"

H26 *(x1)*

H5 *(x1)*

H26 *(x1)*

FORT ASSEMBLY

STEP 21

FP2 (4) | **FLOOR PANEL - W2A02649**
1 1/4"x13 1/2"x81 7/8" (32x344x2080)

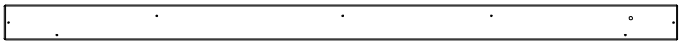

Y1 (2) | **TOP FLOOR BOARD - W4L12785**
5/8"x4"x78" (16x102x1980)

H100086 (94) | **SCREW PFH**
8x1 1/2

H100379 (2) | **T-NUT BLK**
5/16

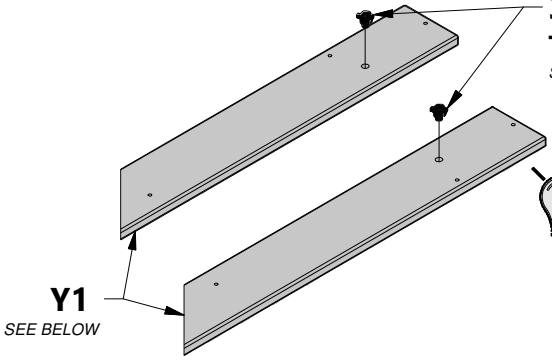

TIP:
INSTALL T-NUTS ON BOTTOM SIDE OF BOTH Y1 BOARDS BEFORE ATTACHING TO FORT.

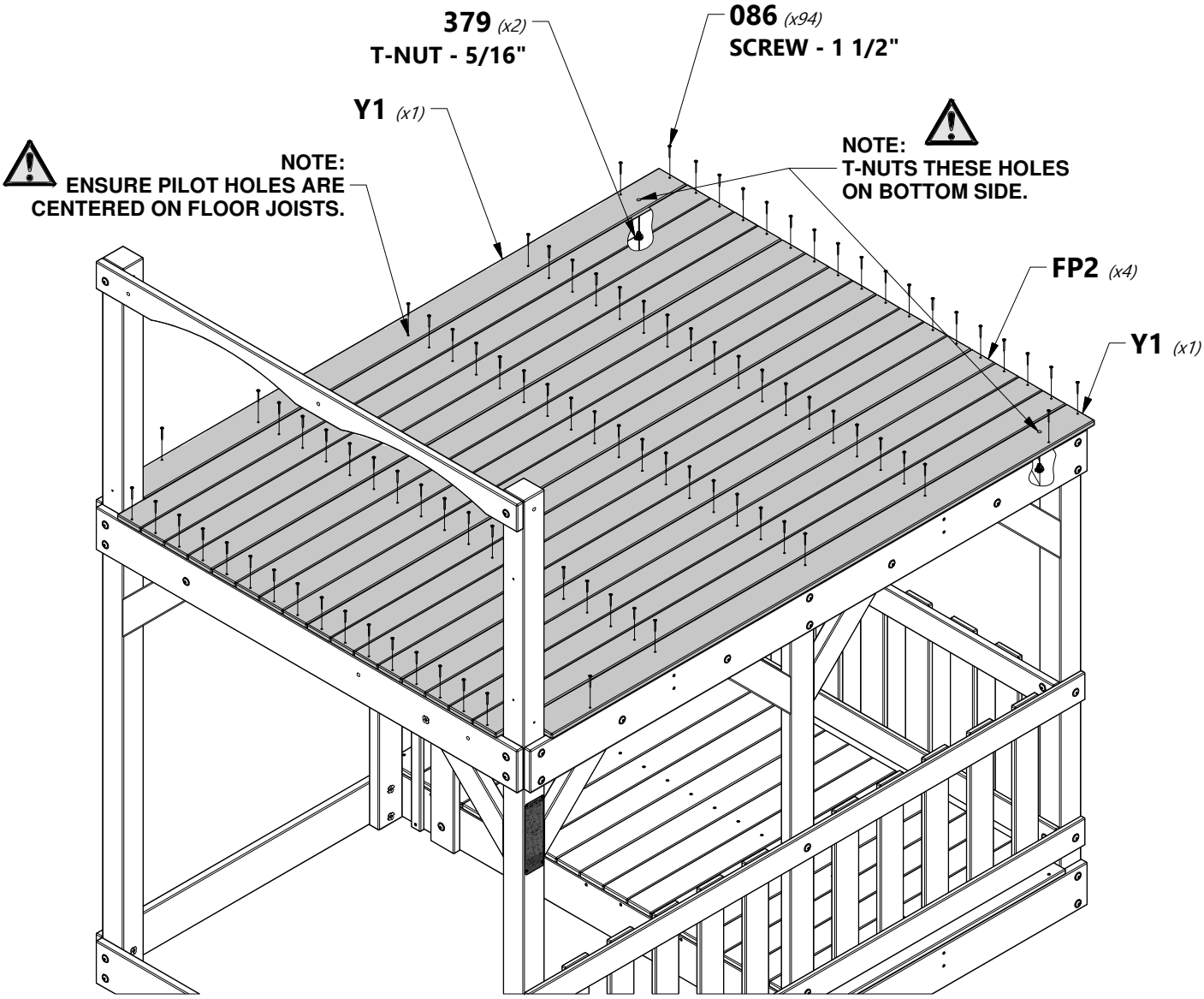

FORT ASSEMBLY

STEP 22

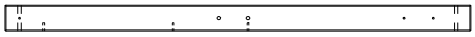

B8 (1) | **BACK RIGHT FORT CORNER - W4L12687**
3"x3"x53 7/8" (76x76x1370)

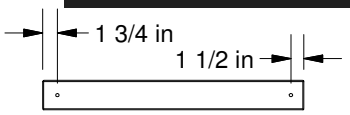

M21 (1) | **FORT WALL RAIL - W4L12761**
5/8"x3 3/8"x30 1/4" (16x86x768)

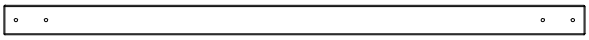

H4 (1) | **ROOF SUPPORT RAIL - W4L12709**
1"x3 3/8"x67 1/4" (24x86x1709)

A100340 (2) | **L BRACKET 2.5x38x50x55**

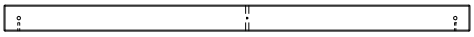

B5 (1) | **BACK LEFT FORT CORNER - W4L12684**
3"x3"x53 7/8" (76x76x1370)

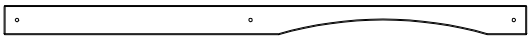

H6 (1) | **BACK FORT RAIL - W4L12711**
1"x3 3/8"x60 1/2" (24x86x1537)

H100194 (1) | **BOLT WH BLK**
5/16x2 1/2

H100396 (2) | **BOLT WH BLK**
5/16x1/2

H100415 (2) | **BOLT WH BLK**
5/16x3 3/4

H100379 (2) | **T-NUT BLK**
5/16

H100484 (1) | **BOLT WH BLK**
5/16x3 1/4

H100192 (2) | **NUT BARREL WH BLK**
5/16x7/8

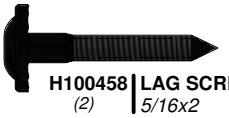

H100458 (2) | **LAG SCREW WH BLK**
5/16x2

H100199 (2) | **WASHER LOCK EXT BLK**
12x19

H100198 (4) | **WASHER LOCK EXT BLK**
8x19

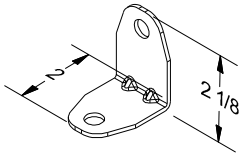

NOTE HOLE LOCATIONS

H4 *(x1)*

379 *(x2)*
T-NUT - 5/16"

198 *(x2)*
WASHER - 8x19

415 *(x2)*
BOLT - 3 3/4"

H6 *(x1)*

B5 *(x1)*

B8 *(x1)*

198 *(x2)*
WASHER - 8x19

458 *(x2)*
LAG SCREW - 2"

M21 *(x1)*

2 1/8

484 *(x1)*
BOLT - 3 1/4"

1 3/4

396 *(x2)*
BOLT - 1/2"

192 *(x2)*
NUT BARREL - 7/8"

199 *(x2)*
WASHER - 12x19

2 1/8

340 *(x2)*
L BRACKET 2.5x38x50x55

194 *(x1)*
BOLT - 2 1/2"

FORT ASSEMBLY

STEP 23

M1 (1) | **TOP WALL RAIL - W4L12743**
5/8"x3 3/8"x80" (16x86x2032)

H23 (1) | **FORT WALL RAIL - W4L12752**
1"x3 3/8"x50 1/4" (24x86x1277)

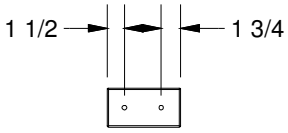

M34 (1) | **WALL RAIL - W4L12770**
5/8"x3 3/8"x6 3/8" (16x86x162)

H100458 (4) | **LAG SCREW WH BLK**
5/16x2

H100198 (4) | **WASHER LOCK EXT BLK**
8x19

198 *(x4)*
WASHER - 8x19

458 *(x4)*
LAG SCREW - 2"

NOTE HOLE LOCATIONS FOR BOARD ORIENTATION.

M1 *(x1)*

H23 *(x1)*

1 1/2 in

M34 *(x1)*

FORT ASSEMBLY

STEP 24

A100340 (1) | L BRACKET 2.5x38x50x55

H18 (1) | FORT WALL RAIL - W4L12723
1"x3 3/8"x29 7/8" (24x86x758)

H100379 (2) | T-NUT BLK 5/16

H100198 (1) | WASHER LOCK EXT BLK 8x19

H100378 (1) | BOLT WH BLK 5/16x1 3/4

H100459 (1) | BOLT WH BLK 5/16x1 1/4

H100396 (1) | BOLT WH BLK 5/16x1/2

H100192 (1) | NUT BARREL WH BLK 5/16x7/8

H100199 (1) | WASHER LOCK EXT BLK 12x19

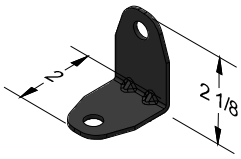

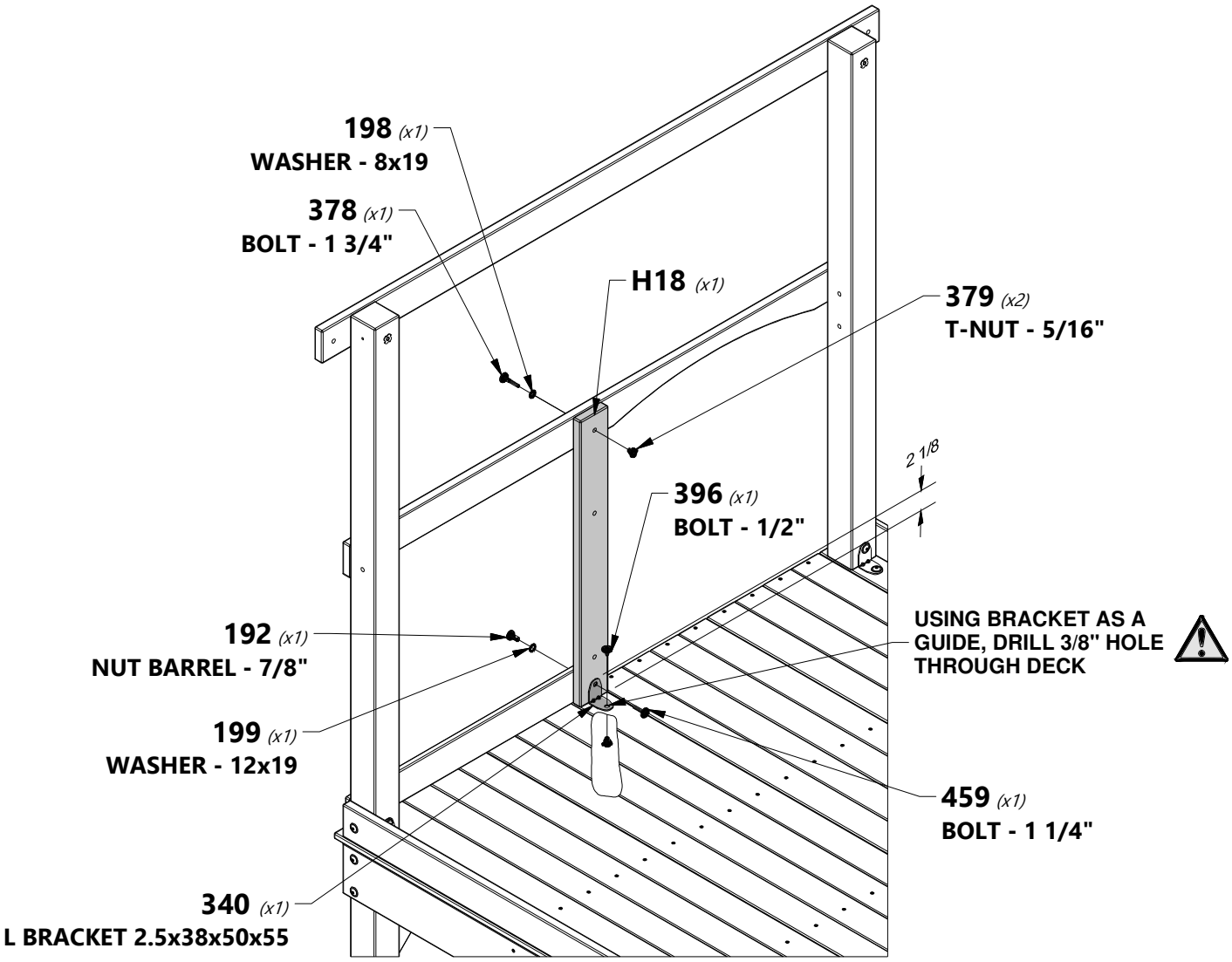

FORT ASSEMBLY

STEP 25

H1 (1) | **WALL RAIL - W4L12706**
1"x3 3/8"x80" (24x86x2032)

Q1 (1) | **SLIDE ATTACHMENT BOARD - W4L12792**
1"x4 1/4"x27" (24x108x687)

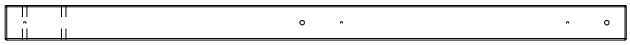

B6 (1) | **FRONT LEFT FORT CORNER - W4L12685**
3"x3"x53 7/8" (76x76x1370)

A100340 (1) | **L BRACKET 2.5x38x50x55**

H22 (1) | **SLIDE ATTACHMENT BOARD - W4L12781**
1"x3"x23" (24x76x585)

H100415 (3) | **BOLT WH BLK**
5/16x3 3/4

H100503 (1) | **BOLT WH BLK**
5/16x3-1/2

H100197 (4) | **LAG SCREW WH BLK**
5/16x2 1/2

H100396 (1) | **BOLT WH BLK**
5/16x1/2

H100192 (1) | **NUT BARREL WH BLK**
5/16x7/8

H100199 (1) | **WASHER LOCK EXT BLK**
12x19

H100379 (4) | **T-NUT BLK**
5/16

H100198 (7) | **WASHER LOCK EXT BLK**
8x19

198 *(x3)*
WASHER - 8x19

415 *(x3)*
BOLT - 3 3/4"

B6 *(x1)*

H22 *(x1)*

H1 *(x1)*

379 *(x3)*
T-NUT - 5/16"

340 *(x1)*
L BRACKET 2.5x38x50x55

199 *(x1)*
WASHER - 12x19

192 *(x1)*
NUT BARREL - 7/8"

2 1/8

396 *(x1)*
BOLT - 1/2"

Q1 *(x1)*

197 *(x4)*
LAG SCREW - 2 1/2"

198 *(x4)*
WASHER - 8x19

USING BRACKET AS A GUIDE, DRILL 3/8" HOLE THROUGH DECK

503 *(x1)*
BOLT - 3 1/2"

379 *(x1)*
T-NUT - 5/16"

FORT ASSEMBLY

STEP 26

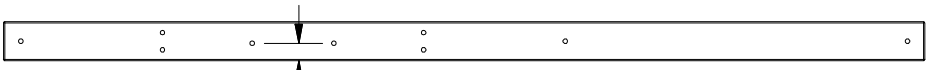

H2 (1) | **WALL RAIL - W4L12707**
1"x3 3/8"x80" (24x86x2032)

A100340 (1) | **L BRACKET 2.5x38x50x55**

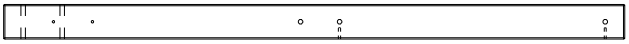

B7 (1) | **FRONT RIGHT FORT CORNER - W4L12686**
3"x3"x53 7/8" (76x76x1370)

H100415 (3) | **BOLT WH BLK**
5/16x3 3/4

H100484 (1) | **BOLT WH BLK**
5/16x3 1/4

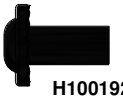

H100192 (1) | **NUT BARREL WH BLK**
5/16x7/8

H100396 (1) | **BOLT WH BLK**
5/16x1/2

H100199 (1) | **WASHER LOCK EXT BLK**
12x19

H100379 (4) | **T-NUT BLK**
5/16

H100198 (3) | **WASHER LOCK EXT BLK**
8x19

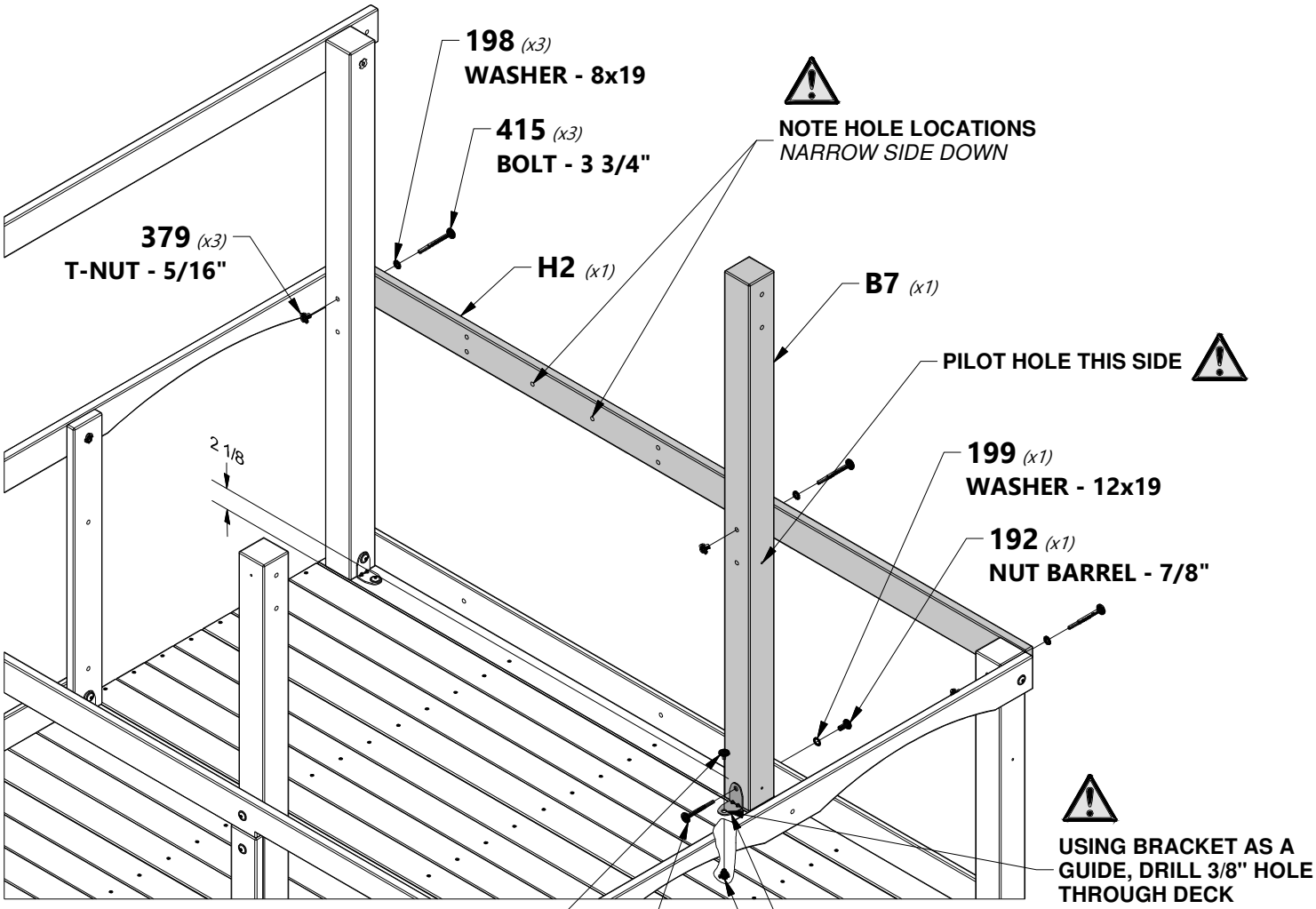

STEP 27

H9 (2) | **FORT WALL BOARD - W4L12714**
1"x3 3/8"x50 1/2" (24x86x1284)

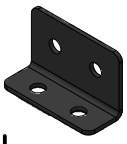

A100396 (2) | **L BRACKET 51x32x82x3.175**

H100761 (4) | **BOLT HEX BLK** *5/16x2*

H100407 (2) | **BOLT WH BLK** *5/16x1 1/2*

H100478 (4) | **WASHER FLAT BLK** *8x27*

H100198 (2) | **WASHER LOCK EXT BLK** *8x19*

H100477 (4) | **WASHER SPLIT BLK** *5/16*

H100379 (6) | **T-NUT BLK** *5/16*

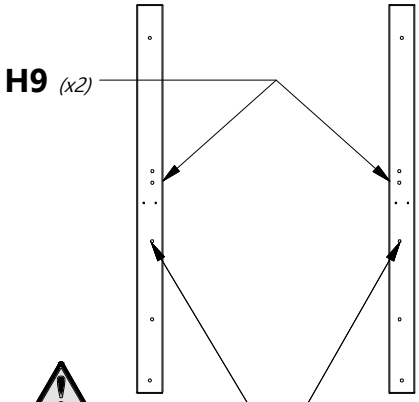

NOTE:
HOLES ARE CLOSER TO THE INSIDE WHEN INSTALLED.

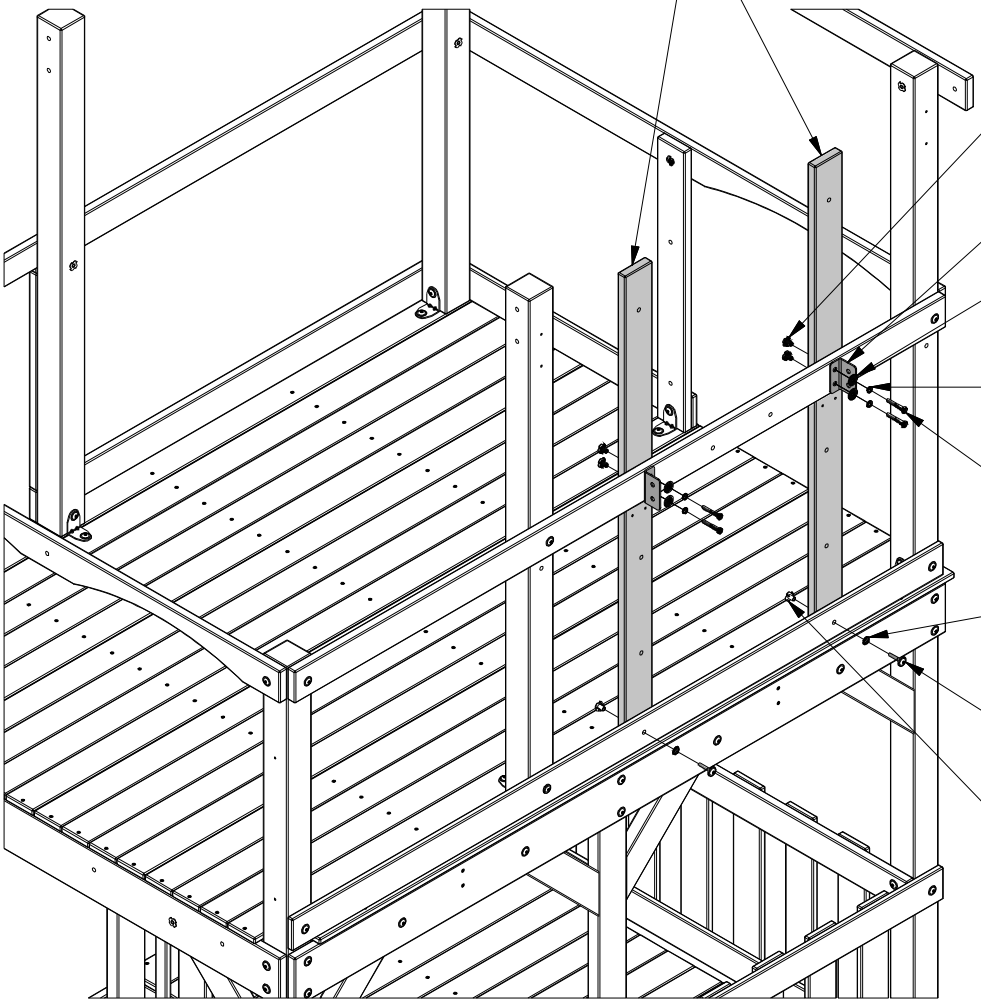

379 *(x4)*
T-NUT - 5/16"

396 *(x2)*
L BRACKET 51x32x82x3.175

478 *(x4)*
WASHER - 8x27

477 *(x4)*
WASHER - 5/16

761 *(x4)*
BOLT - 5/-16x2" BLK

198 *(x2)*
WASHER - 8x19

407 *(x2)*
BOLT - 1 1/2"

379 *(x2)*
T-NUT - 5/16"

FORT ASSEMBLY

STEP 28

K5 (1) | **FORT WALL RAIL - W4L12740**
5/8"x5 1/4"x50 1/4" (16x134x1277)

H14 (1) | **SWING BEAM MOUNT - W4L12719**
1"x3 3/8"x50 1/4" (24x86x1277)

H100415 (2) | **BOLT WH BLK**
5/16x3 3/4

H100407 (2) | **BOLT WH BLK**
5/16x1 1/2

H100089 (4) | **SCREW PFH**
8x1 3/4

H100458 (4) | **LAG SCREW WH BLK**
5/16x2

H100379 (4) | **T-NUT BLK**
5/16

H100198 (8) | **WASHER LOCK EXT BLK**
8x19

198 *(x6)*
WASHER - 8x19

458 *(x4)*
LAG SCREW - 2"

379 *(x2)*
T-NUT - 5/16"

407 *(x2)*
BOLT - 1 1/2"

K5 *(x1)*

H14 *(x1)*

NOTE HOLE LOCATIONS
HOLES DOWN

198 *(x2)*
WASHER - 8x19

415 *(x2)*
BOLT - 3 3/4"

089 *(x4)*
SCREW - 1 3/4"

379 *(x2)*
T-NUT - 5/16"

FORT ASSEMBLY

STEP 29

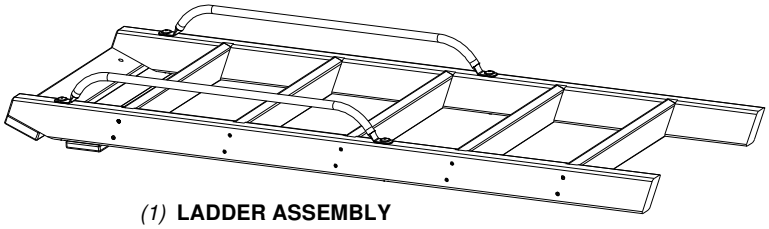

(1) **LADDER ASSEMBLY**

H100378 | **BOLT WH BLK**
(2) | *5/16x1 3/4*

H100379 | **T-NUT BLK**
(2) | *5/16*

H100198 | **WASHER LOCK EXT BLK**
(2) | *8x19*

379 *(x2)*
T-NUT - 5/16"

198 *(x2)*
WASHER - 8x19

378 *(x2)*
BOLT - 1 3/4"

(x1) **LADDER ASSEMBLY**

FORT ASSEMBLY

STEP 30

H4 | **ROOF SUPPORT RAIL - W4L12709**
(1) | *1"x3 3/8"x67 1/4" (24x86x1709)*

H7 | **FRONT FORT WALL RAIL - W4L12712**
(1) | *1"x3 3/8"x60 1/2" (24x86x1537)*

H100415 | **BOLT WH BLK**
(4) | *5/16x3 3/4*

H100379 | **T-NUT BLK**
(4) | *5/16*

H100198 | **WASHER LOCK EXT BLK**
(4) | *8x19*

415 *(x4)*
BOLT - 3 3/4"

198 *(x4)*
WASHER - 8x19

379 *(x4)*
T-NUT - 5/16"

H4 *(x1)*

H7 *(x1)*

FORT ASSEMBLY

STEP 31

A100340 (1) | L BRACKET 2.5x38x50x55

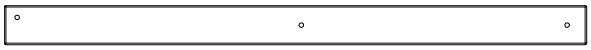

H8 (1) | FORT UPRIGHT - W4L12713 1"x3 3/8"x50 1/2" (24x86x1284)

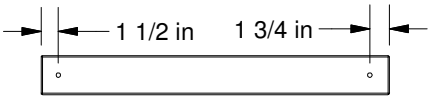

M21 (2) | FORT WALL RAIL - W4L12761 5/8"x3 3/8"x30 1/4" (16x86x768)

H100458 (2) | LAG SCREW WH BLK 5/16x2

H100407 (1) | BOLT WH BLK 5/16x1 1/2

H100459 (1) | BOLT WH BLK 5/16x1 1/4

H100396 (1) | BOLT WH BLK 5/16x1/2

H100192 (1) | NUT BARREL WH BLK 5/16x7/8

H100379 (2) | T-NUT BLK 5/16

H100198 (3) | WASHER LOCK EXT BLK 8x19

H100199 (1) | WASHER LOCK EXT BLK 12x19

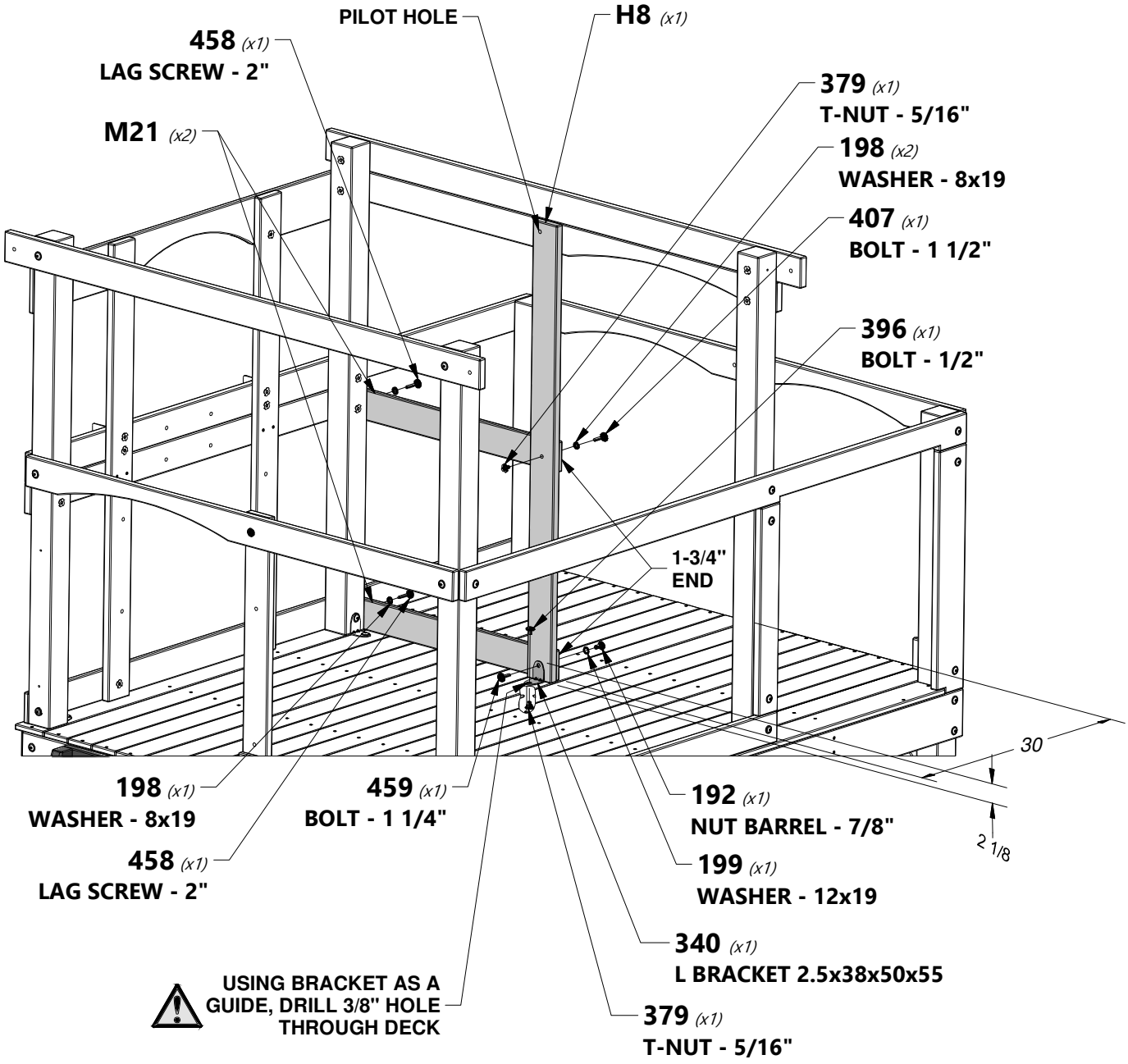

FORT ASSEMBLY

STEP 32

H13 (1) | **FORT WALL RAIL - W4L12718**
1"x3 3/8"x50 1/4" (24x86x1277)

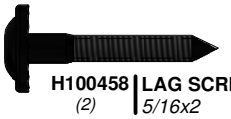

H100458 (2) | **LAG SCREW WH BLK**
5/16x2

H100198 (2) | **WASHER LOCK EXT BLK**
8x19

H13 *(x1)*

198 *(x2)*
WASHER - 8x19

458 *(x2)*
LAG SCREW - 2"

FORT ASSEMBLY

STEP 33

A100340 (1) | L BRACKET 2.5x38x50x55

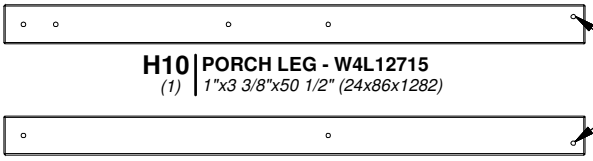

H10 (1) | PORCH LEG - W4L12715
1"x3 3/8"x50 1/2" (24x86x1282)

H11 (1) | PORCH LEG - W4L12716
1"x3 3/8"x50 1/2" (24x86x1282)

NOTE:
HOLES GO OUTWARD WHEN INSTALLED.

H100199 (1) | WASHER LOCK EXT BLK
12x19

H100198 (3) | WASHER LOCK EXT BLK
8x19

H100378 (2) | BOLT WH BLK
5/16x1 3/4

H100407 (1) | BOLT WH BLK
5/16x1 1/2

H100396 (2) | BOLT WH BLK
5/16x1/2

H100192 (1) | NUT BARREL WH BLK
5/16x7/8

H100379 (4) | T-NUT BLK
5/16

NOTE:
HOLES GO OUTWARD.

379 *(x2)*
T-NUT - 5/16"

H11 *(x1)*

H10 *(x1)*

198 *(x2)*
WASHER - 8x19

378 *(x2)*
BOLT - 1 3/4"

USING BRACKET AS AS GUIDE, DRILL 3/8" HOLE THROUGH DECK.

199 *(x1)*
WASHER - 12x19

192 *(x1)*
NUT BARREL - 7/8"

2 1/8

340 *(x1)*
L BRACKET 2.5x38x50x55

396 *(x2)*
BOLT - 1/2"

379 *(x1)*
T-NUT - 5/16"

379 *(x1)*
T-NUT - 5/16"

198 *(x1)*
WASHER - 8x19

407 *(x1)*
BOLT - 1 1/2"

FORT ASSEMBLY

STEP 34

M8 (2) | **FORT WALL BOARD - W4L12750**
5/8"x3 3/8"x50 1/2" (16x86x1284)

N1 (2) | **FORT WALL BOARD - W4L12776**
5/8"x2 3/8"x50 1/2" (16x60x1284)

M9 (2) | **FORT WALL BOARD - W4L12751**
5/8"x3"x50 1/2" (16x76x1284)

M23 (2) | **FORT WALL BOARD - W4L12763**
5/8"x3 1/8"x29 7/8" (16x80x758)

M22 (4) | **FORT WALL BOARD - W4L12762**
5/8"x3 3/8"x29 7/8" (16x86x758)

H100088 (56) | **SCREW PFH**
8x1 1/8

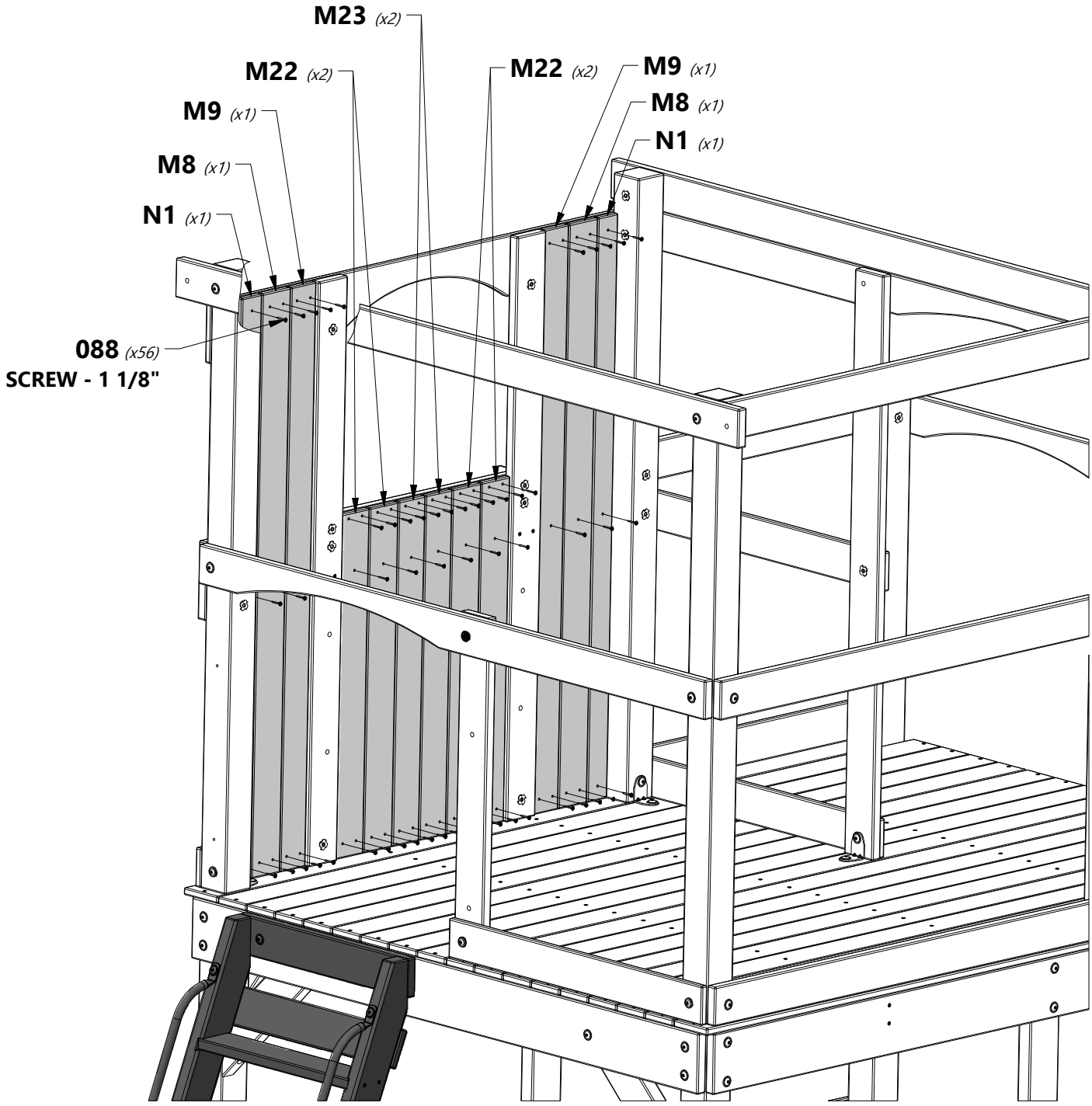

FORT ASSEMBLY

STEP 35

M6 (1) | **FORT WALL BOARD - W4L12748**
5/8"x3 3/8"x53 7/8" (16x86x1370)

M26 (2) | **WALL BOARD - W4L12765**
5/8"x3 3/8"x26 1/8" (16x86x664)

M24 (6) | **WALL BOARD - W4L12764**
5/8"x3 3/8"x29 7/8" (16x86x758)

H100088 (38) | **SCREW PFH**
8x1 1/8

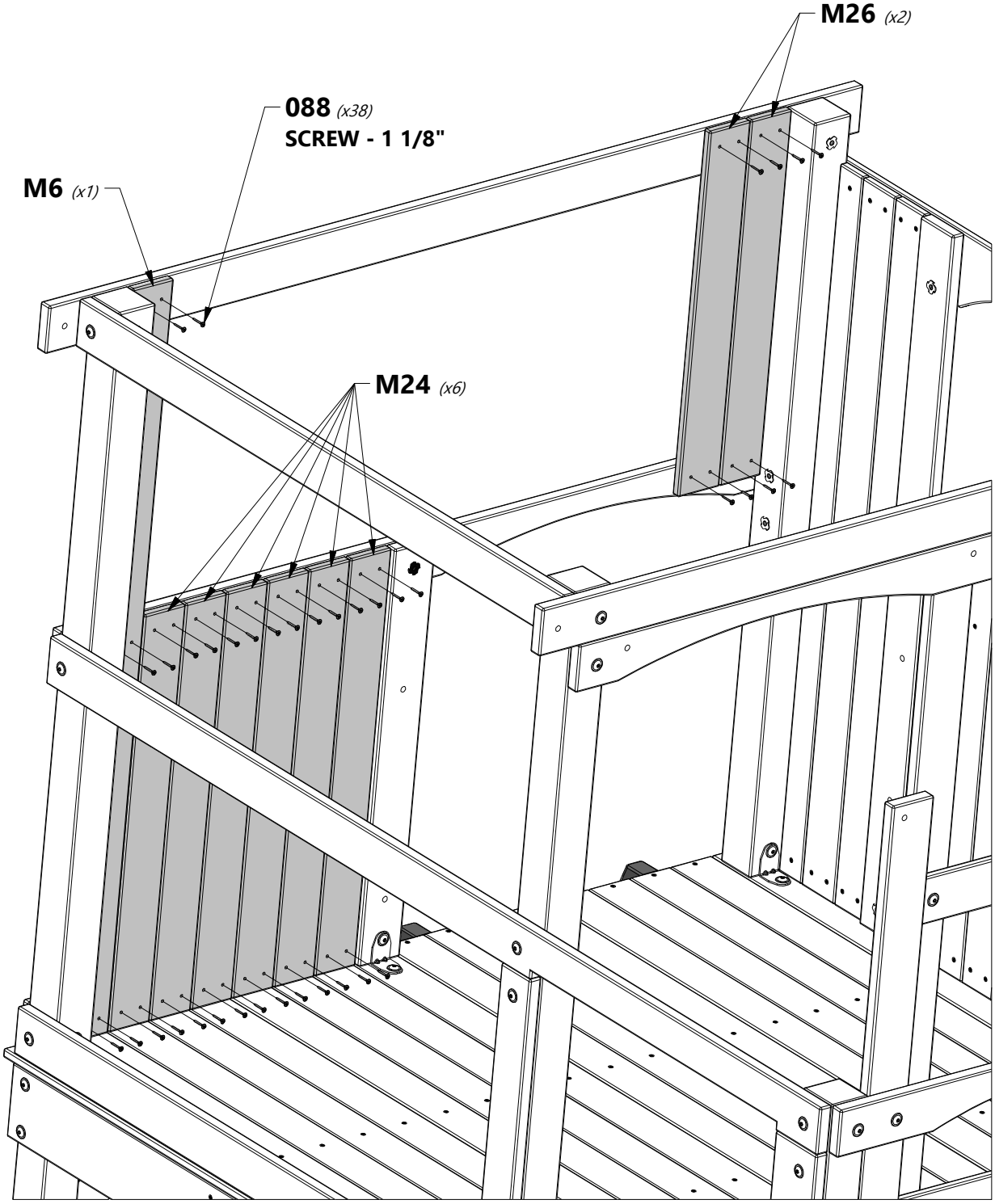

FORT ASSEMBLY

STEP 36

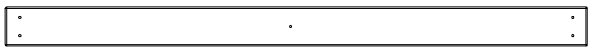

M8 (5) | **FORT WALL BOARD - W4L12750**
5/8"x3 3/8"x50 1/2" (16x86x1284)

M17 (2) | **FRONT WINDOW WALL BOARD - W4L12758**
5/8"x3 3/8"x35" (16x86x889)

H100088 (35) | **SCREW PFH**
8x1 1/8

M33 (2) | **FRONT WINDOW WALL BOARD - W4L12769**
5/8"x3 3/8"x6 3/8" (16x86x162)

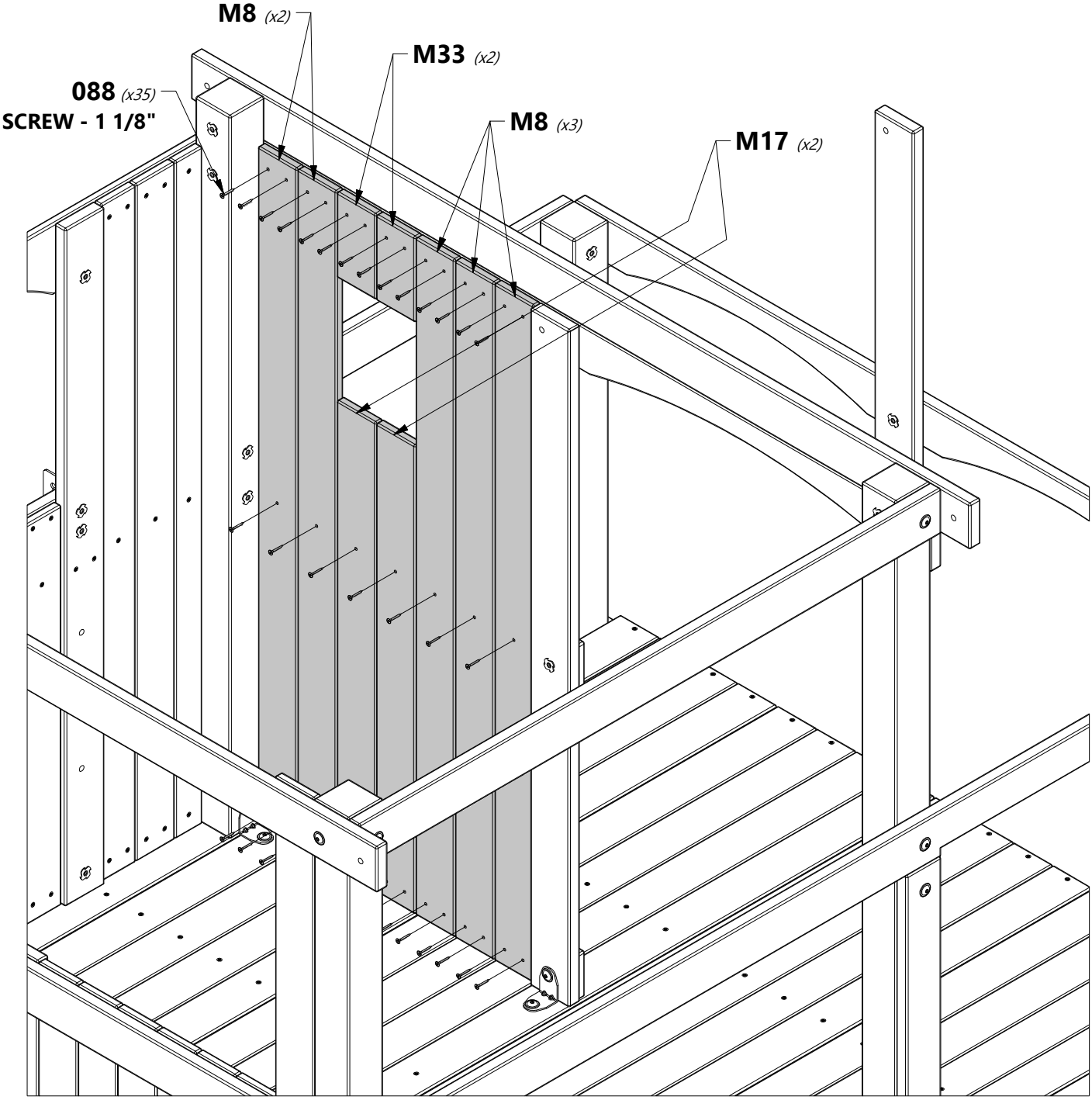

STEP 37

M24 (13) | **WALL BOARD - W4L12764**
5/8"x3 3/8"x29 7/8" (16x86x758)

H100088 (52) | **SCREW PFH**
8x1 1/8

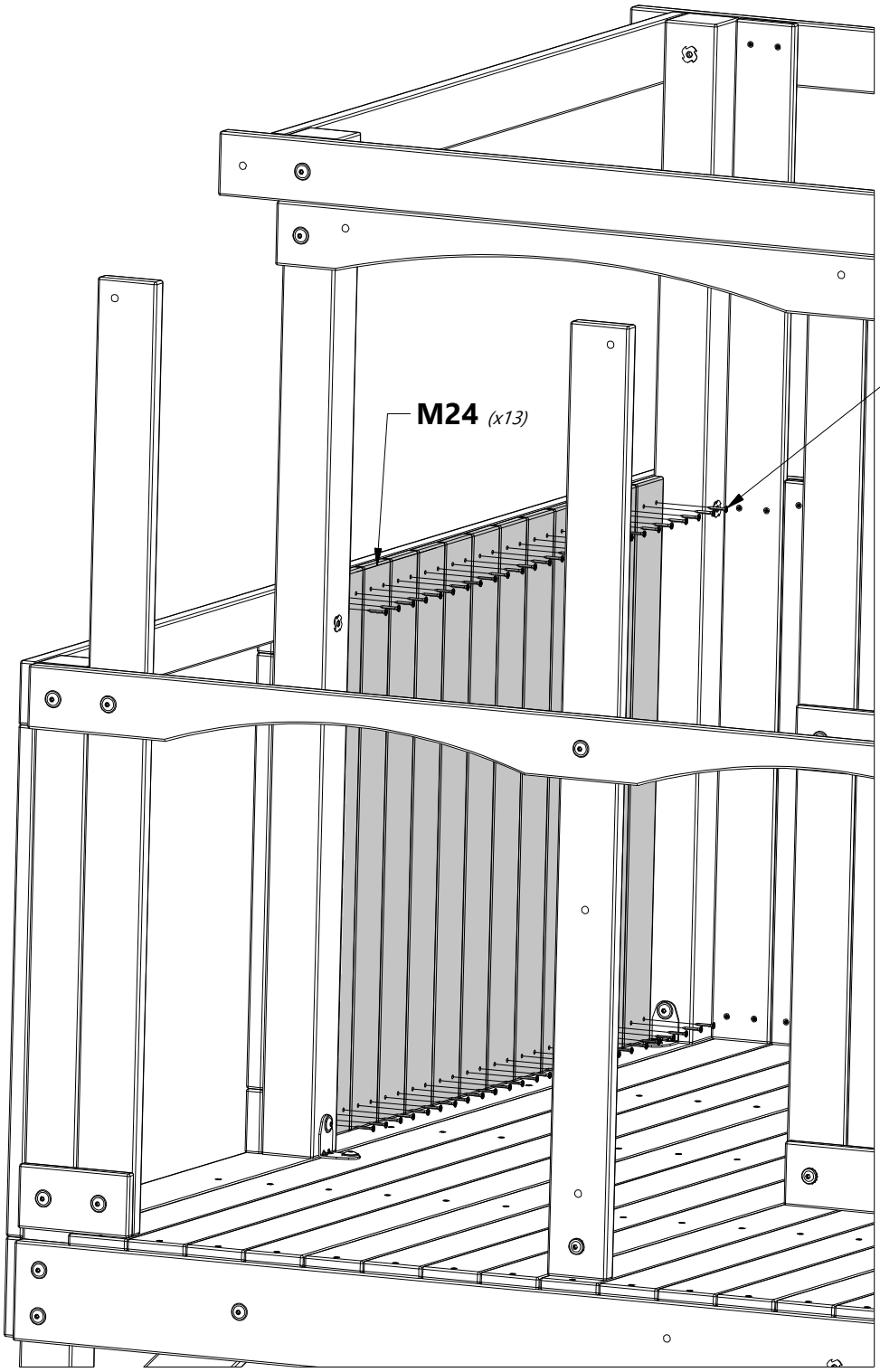

STEP 38

M24 (4) | **WALL BOARD - W4L12764**
5/8"x3 3/8"x29 7/8" (16x86x758)

H100088 (16) | **SCREW PFH**
8x1 1/8

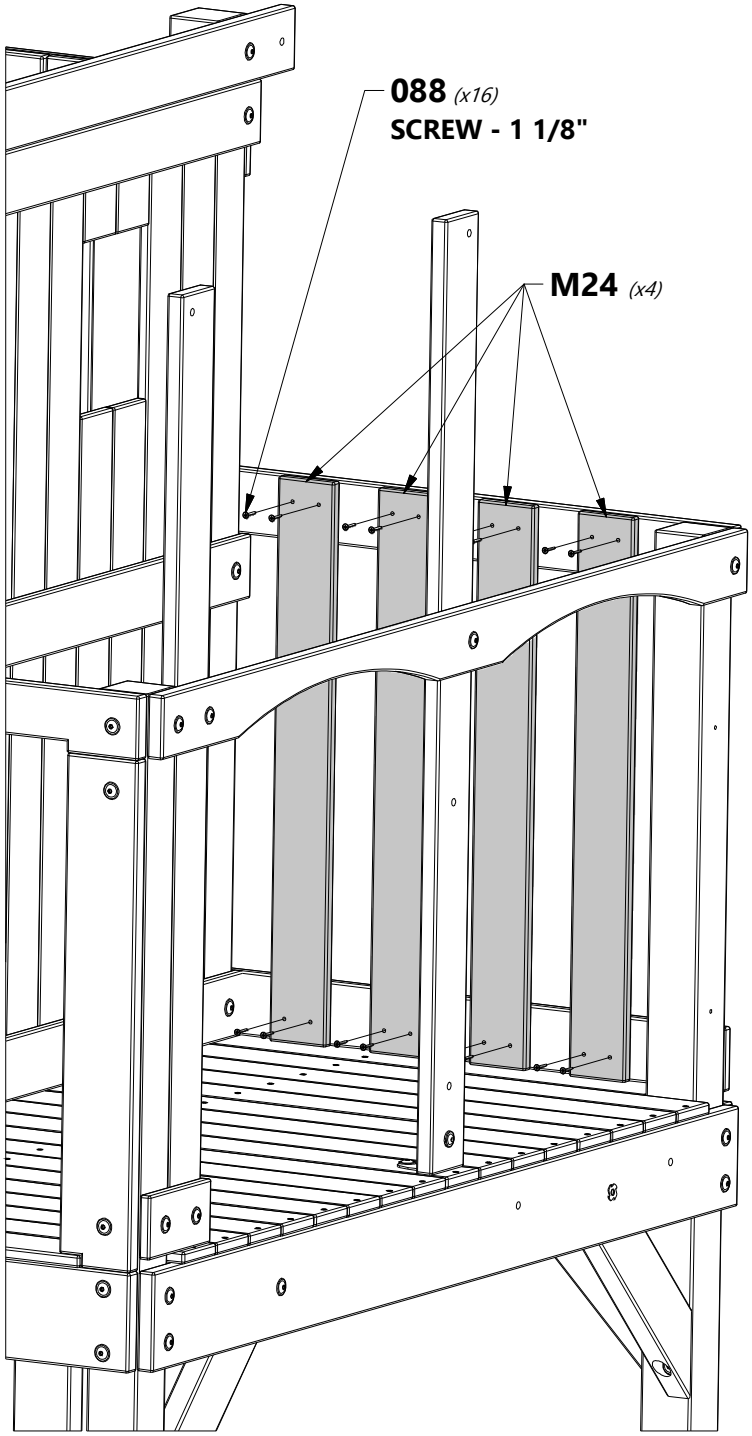

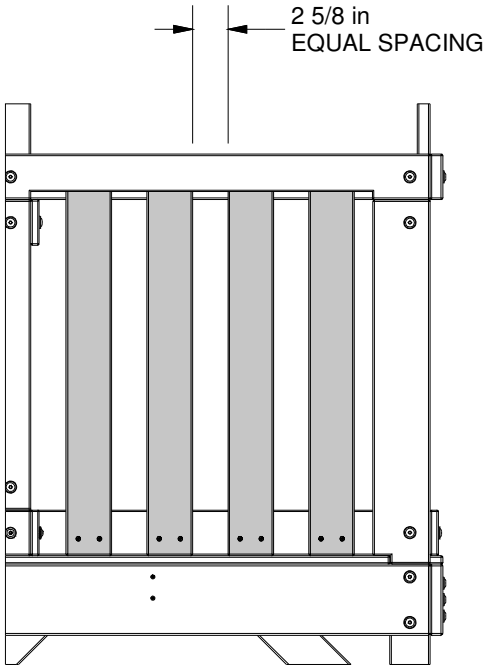

FORT ASSEMBLY

STEP 39

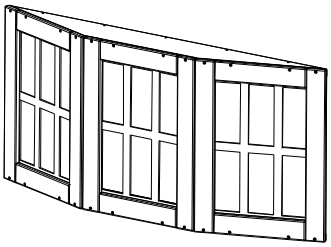

(2) **BAY WINDOW ASSEMBLY**

H100391 *(20)* | **SCREW PFH BLK** *8x2*

H100128 *(24)* | **SCREW PWH** *8x5/8*

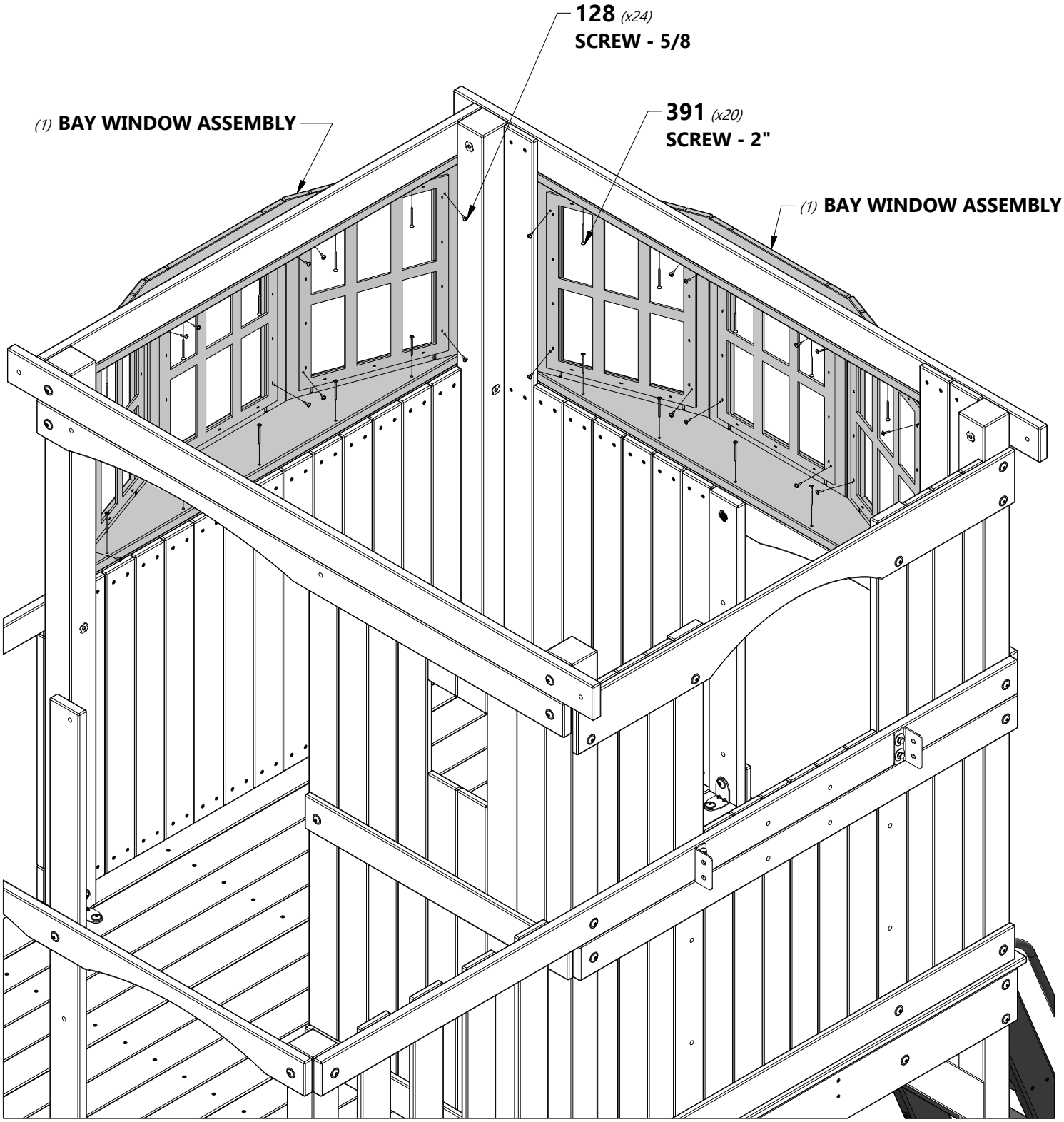

FORT ASSEMBLY

STEP 40

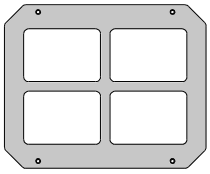

A100014 (1) | PLASTIC WINDOW WHITE

H100070 (4) | SCREW PWH 8x3/4

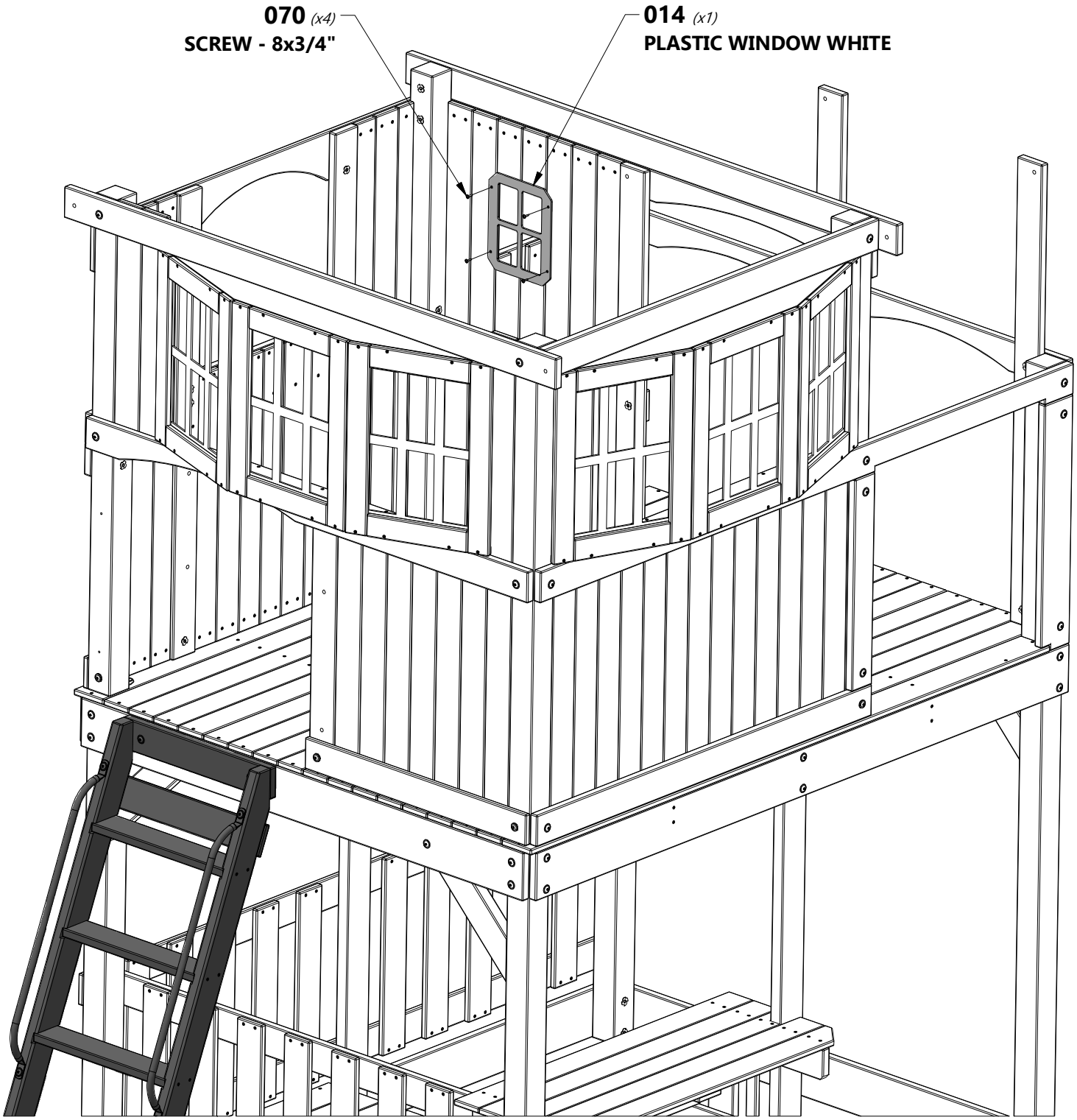

STEP 41

A100324 (2) | LADDER RUNG 578 GREEN

H100468 (4) | BOLT WH BLK 5/16x1

H100379 (4) | T-NUT BLK 5/16

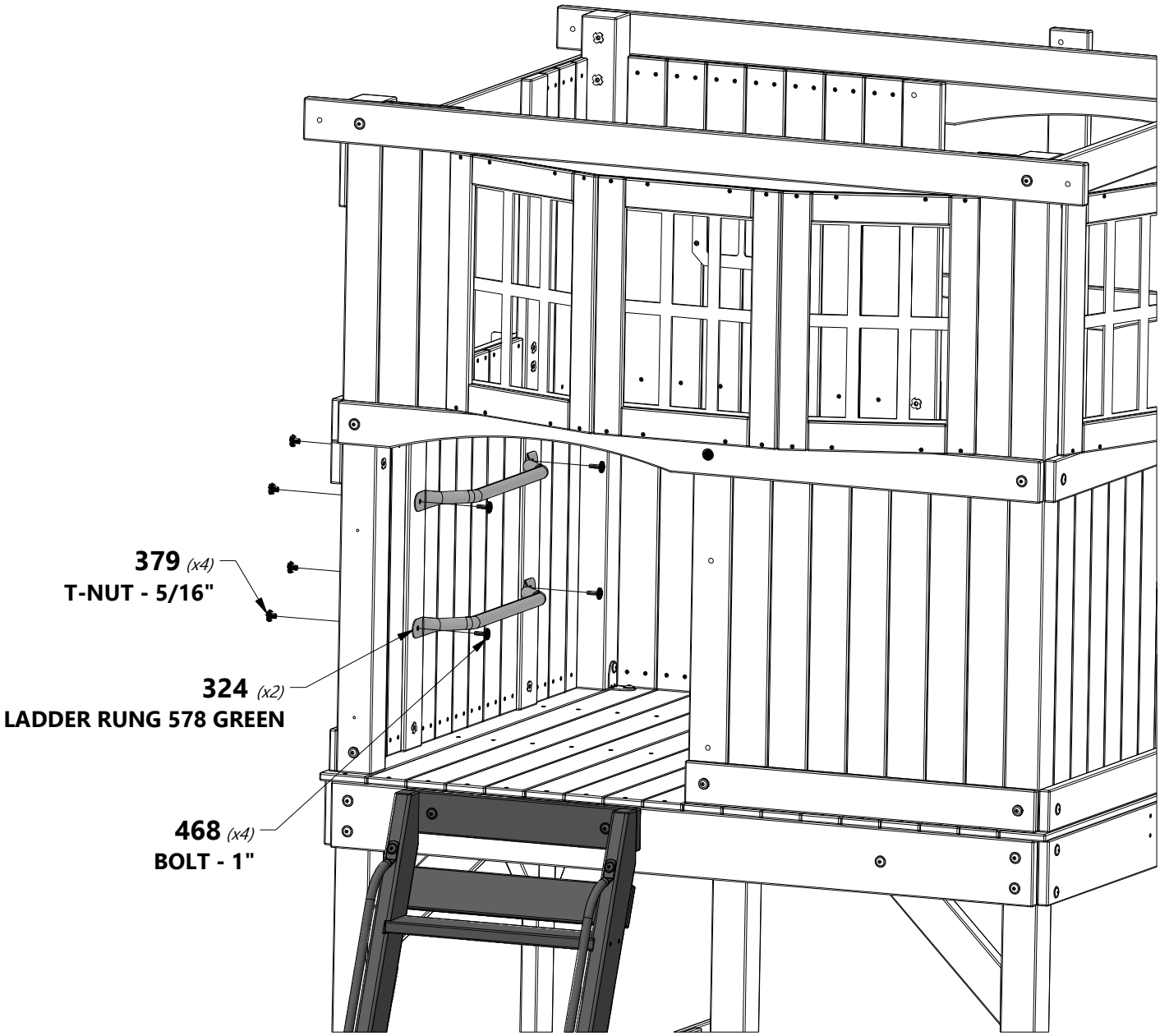

FORT ASSEMBLY

STEP 42

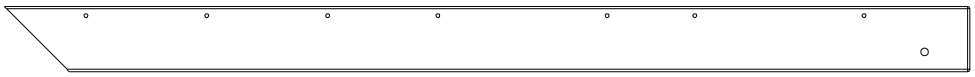

H12 (4) | **ROOF RAFTER - W4L12717**
1"x3 3/8"x50 3/8" (24x86x1278)

H100378 (4) | **BOLT WH BLK**
5/16x1 3/4

H100379 (4) | **T-NUT BLK**
5/16

H100483 (2) | **SCREW PFH BLK**
8x2 1/4

H100198 (4) | **WASHER LOCK EXT BLK**
8x19

USING A 3/16" DRILL BIT, MARK AND DRILL A PILOT HOLE INTO 'H12' RAFTER TO PREVENT SPLITTING. ONLY DRILL THROUGH ONE RAFTER NOT BOTH.

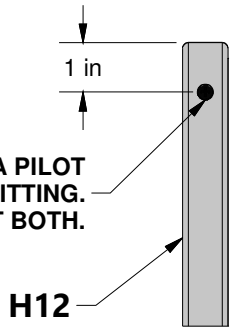

483 *(x2)*
SCREW - 8x2 1/4"

H12 *(x4)*

H4

379 *(x4)*
T-NUT - 5/16"

198 *(x4)*
WASHER - 8x19

378 *(x4)*
BOLT - 1 3/4"

FORT ASSEMBLY

STEP 43

M5 (2) | **GABLE BOARD - W4L12747**
5/8"x3 3/8"x59 1/2" (16x86x1510)

M7 (2) | **GABLE BOARD - W4L12749**
5/8"x3 3/8"x52 5/8" (16x86x1338)

H100088 (8) | **SCREW PFH**
8x1 1/8

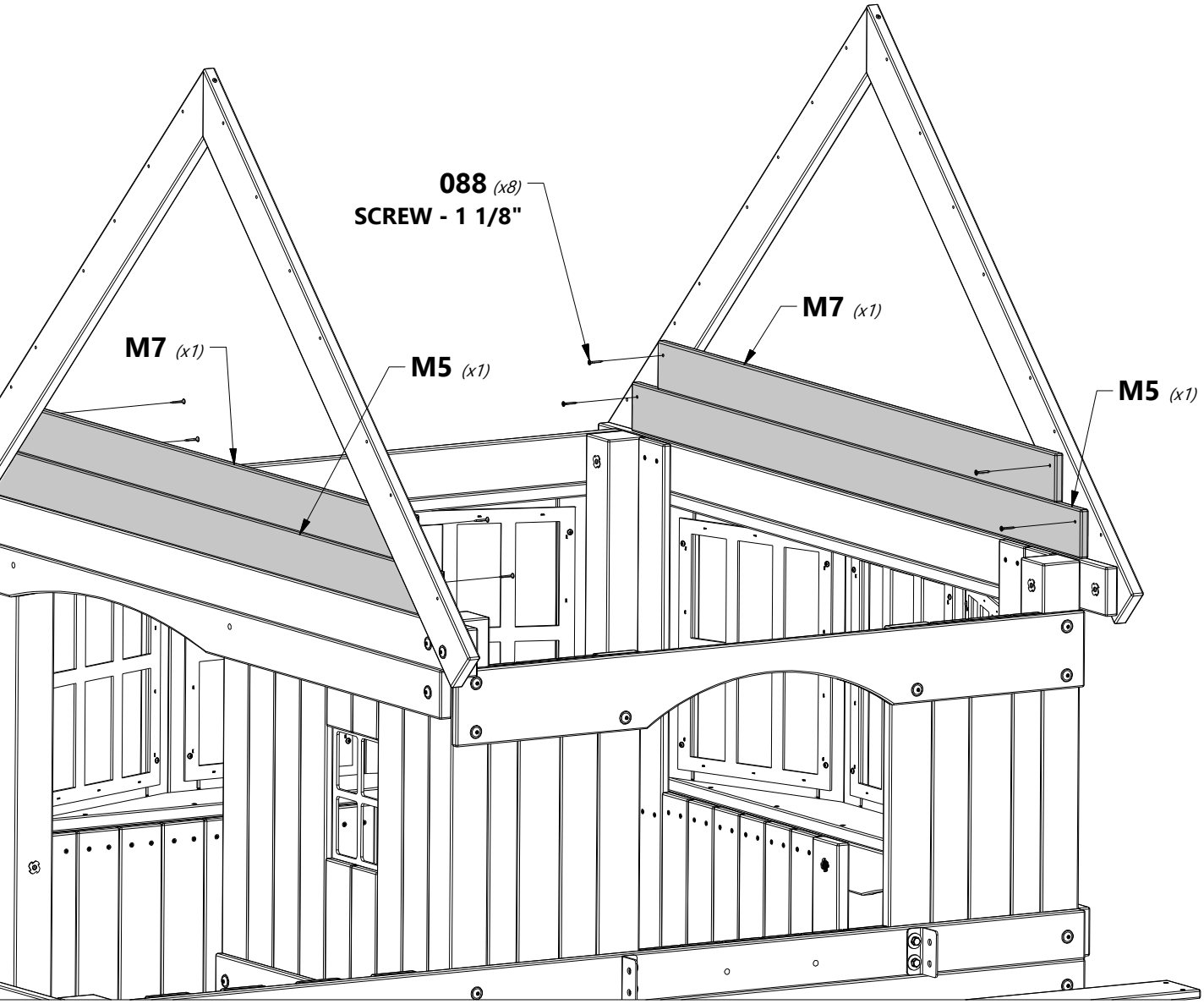

FORT ASSEMBLY

STEP 44

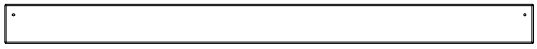

M12 (1) | **GABLE BOARD - W4L12754**
5/8"x3 3/8"x45 7/8" (16x86x1166)

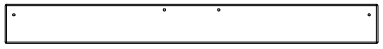

M18 (1) | **GABLE BOARD - W4L12759**
5/8"x3 3/8"x32 3/8" (16x86x822)

M14 (1) | **GABLE BOARD - W4L12756**
5/8"x3 3/8"x39 1/8" (16x86x994)

H100088 (6) | **SCREW PFH**
8x1 1/8

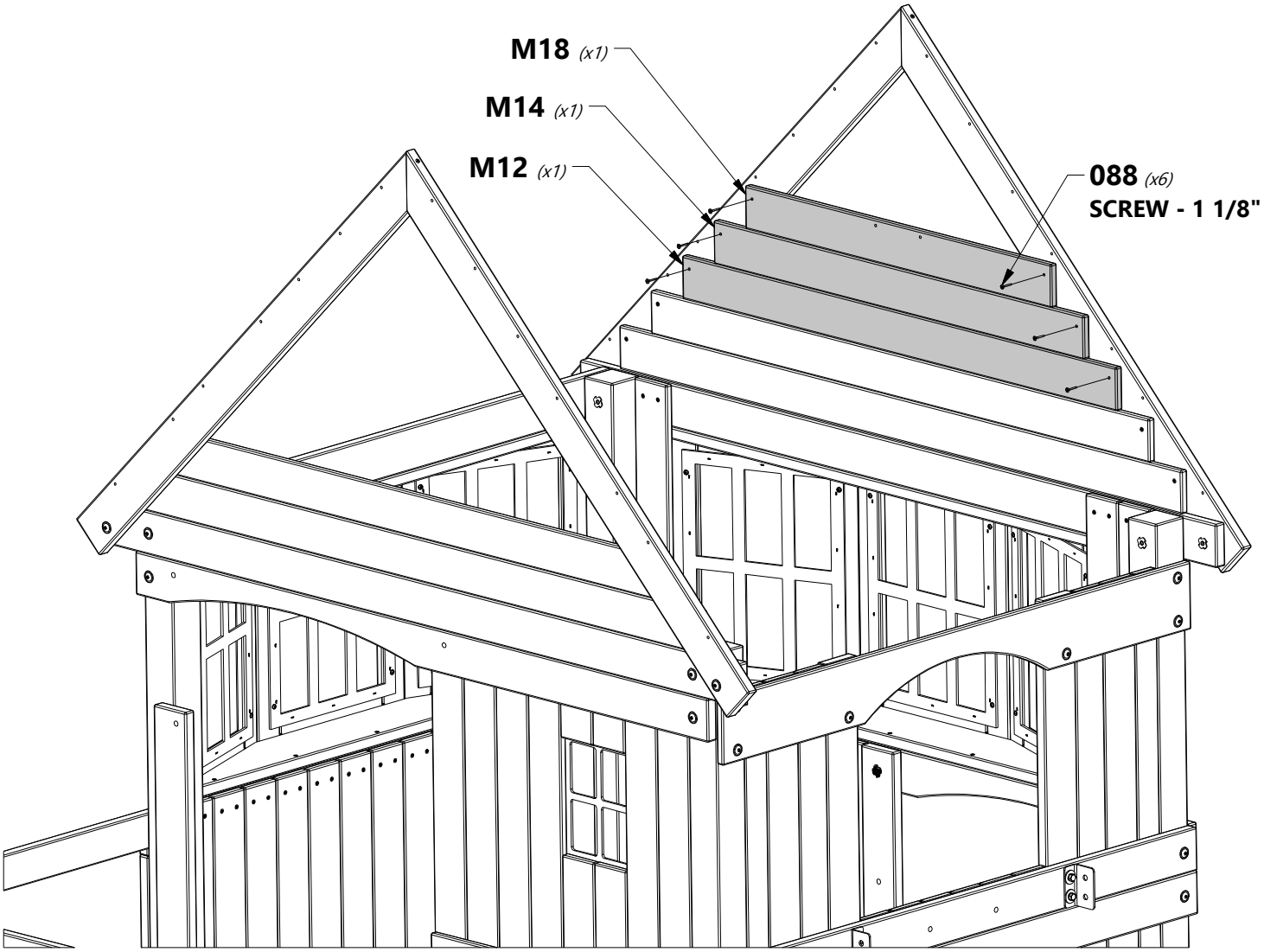

FORT ASSEMBLY

STEP 45

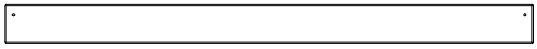

M12 (1) | **GABLE BOARD - W4L12754**
5/8"x3 3/8"x45 7/8" (16x86x1166)

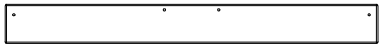

M18 (1) | **GABLE BOARD - W4L12759**
5/8"x3 3/8"x32 3/8" (16x86x822)

H100088 (6) | **SCREW PFH**
8x1 1/8

M14 (1) | **GABLE BOARD - W4L12756**
5/8"x3 3/8"x39 1/8" (16x86x994)

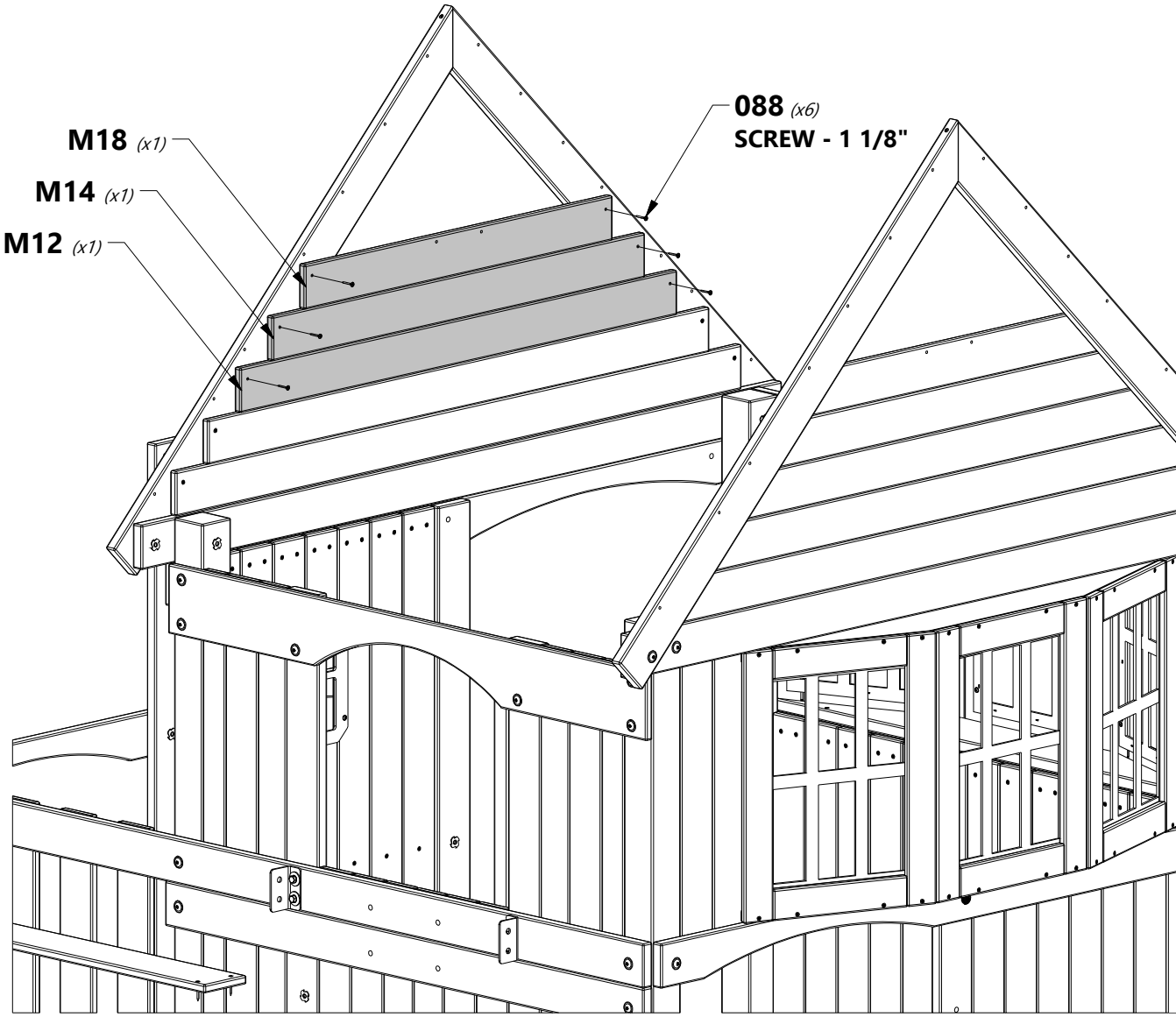

FORT ASSEMBLY

STEP 46

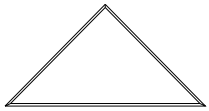

K6 (2) | **TRIANGLE SUNBURST - W4L12741**
5/8"x5 1/4"x10 3/8" (16x134x265)

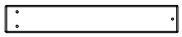

N5 (2) | **FRONT PORCH GABLE TRIM - W4L12780**
5/8"x2 3/8"x15" (16x60x381)

N8 (4) | **FRONT PORCH GABLE TRIM - W4L12782**
5/8"x2 3/8"x9 1/2" (16x60x241)

H100380 (18) | **SCREW PFH BLK**
8x1 1/8

H100088 (4) | **SCREW PFH**
8x1 1/8

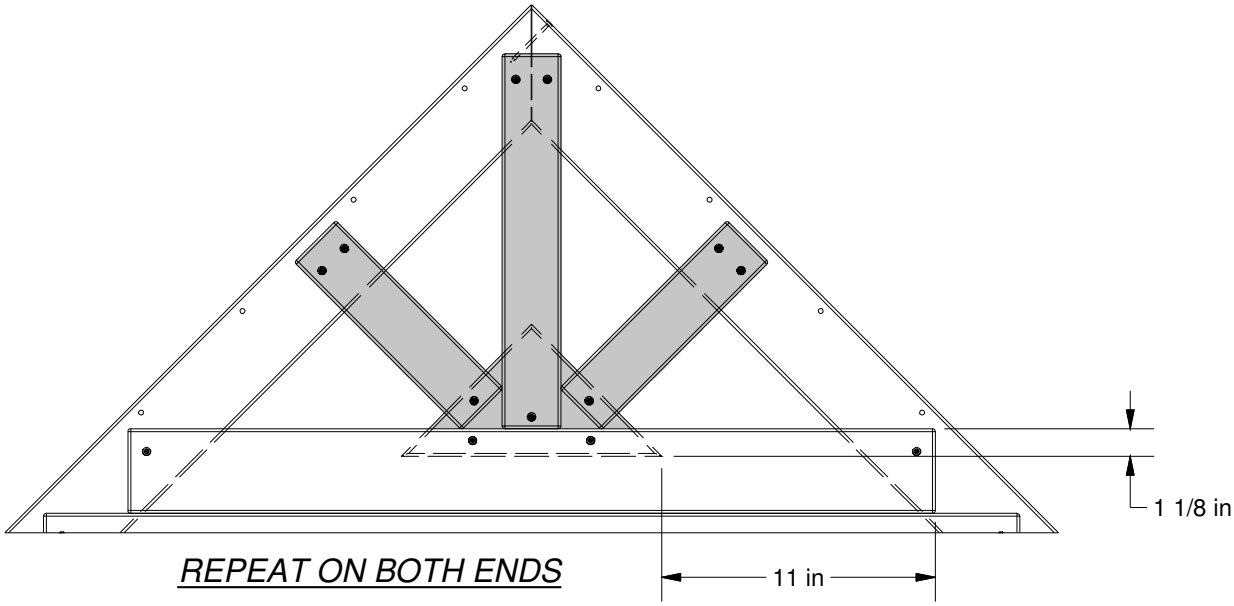

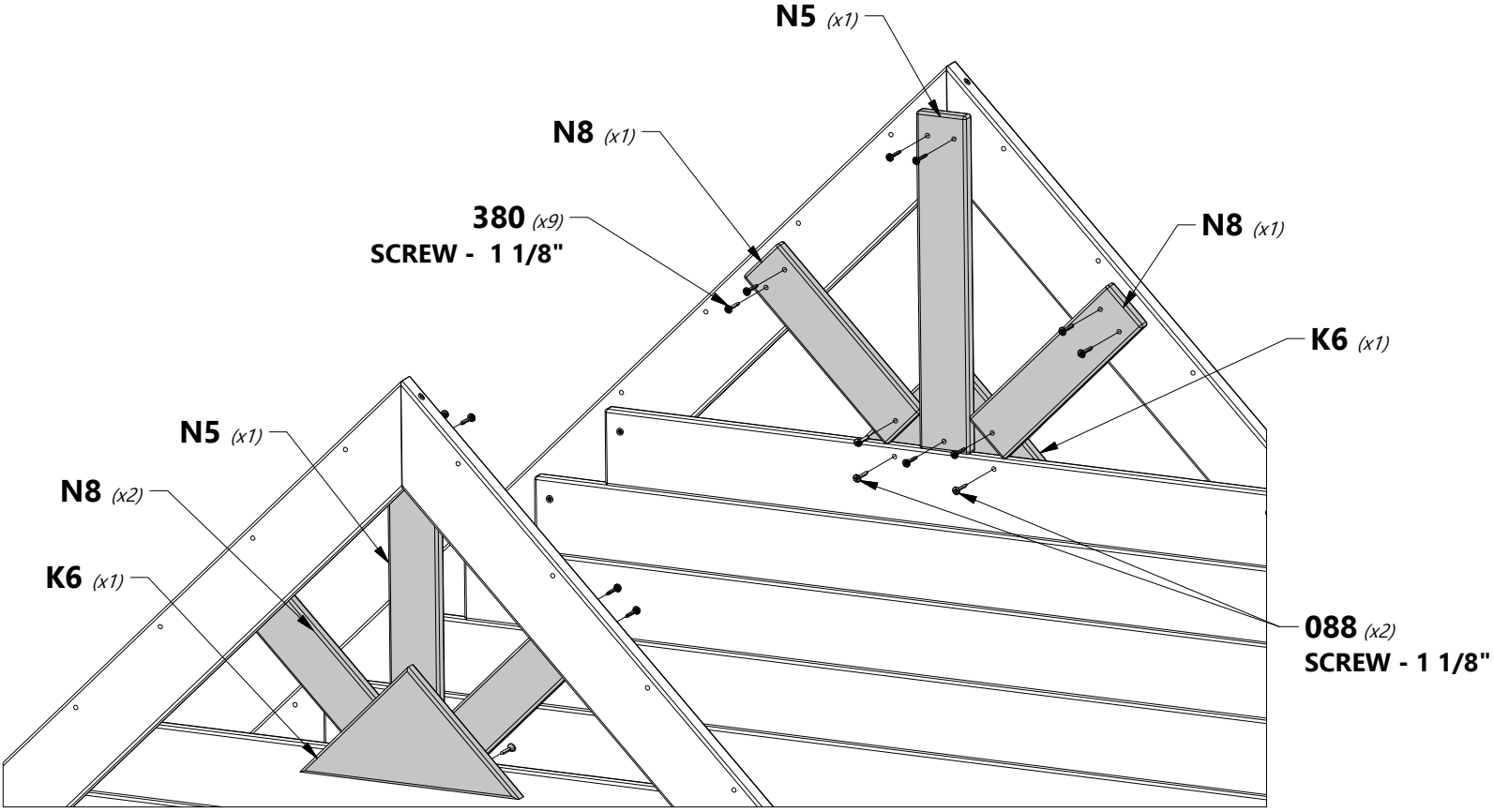

STEP 47

M11 (1) | **SOFFIT CAP - W4L12753**
5/8"x3 3/8"x50 1/4" (16x86x1277)

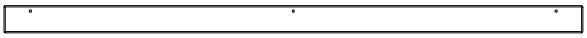

N2 (1) | **SOFFIT CAP - W4L12777**
5/8"x2 3/8"x50 1/4" (16x60x1277)

H100200 (6) | **SCREW PFH BLK**
8x1 1/2

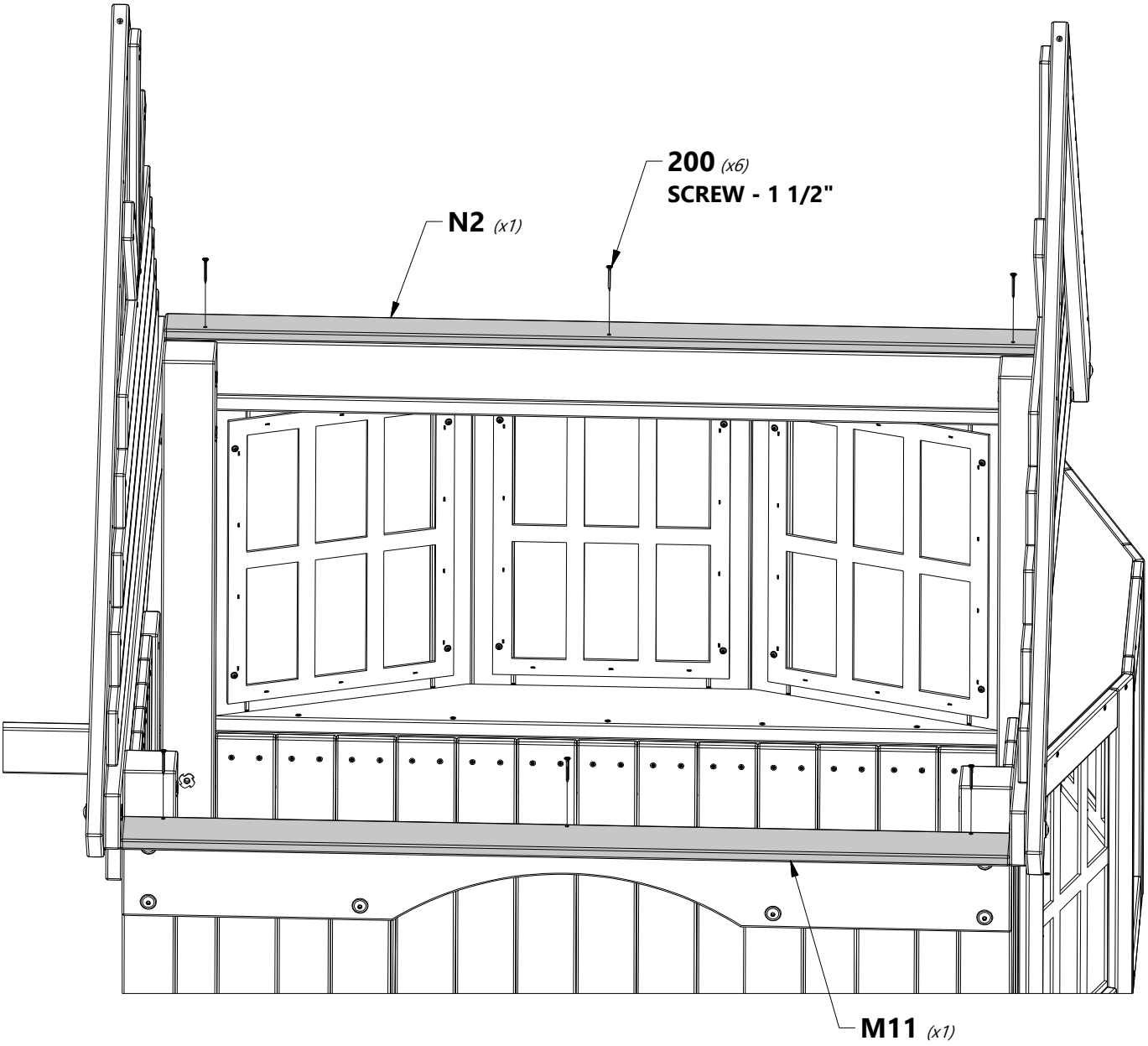

FORT ASSEMBLY

STEP 48

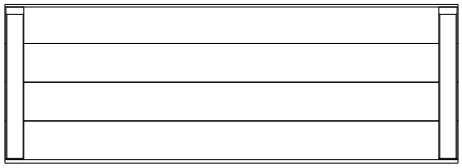

RP3 (1) | **PEAK ROOF PANEL - W2A02652**
1 5/8"x20 5/8"x59" (42x524x1499)

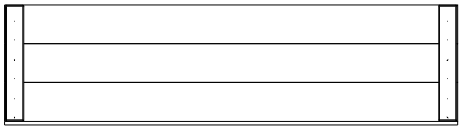

RP6 (2) | **ROOF PANEL - W2A02655**
1 5/8"x15 5/8"x59" (42x396x1499)

H100483 (14) | **SCREW PFH BLK**
8x2 1/4

NOTE:
START WITH TOP PANEL FIRST.
FLUSH EDGES.

483 *(x14)*
SCREW - 8x2 1/4"

RP3 *(x1)*

RP6 *(x2)*

STEP 49

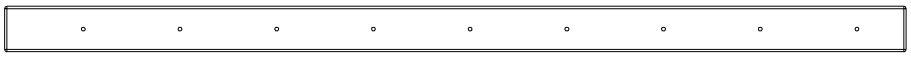

N3 | **ROOF SUPPORT - W4L12778**
(1) | *5/8"x2 3/8"x47" (16x60x1193)*

H100380 | **SCREW PFH BLK**
(9) | *8x1 1/8*

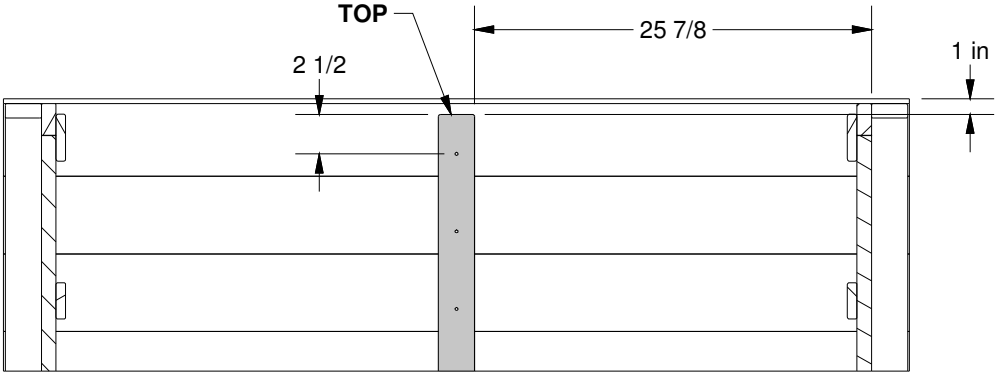

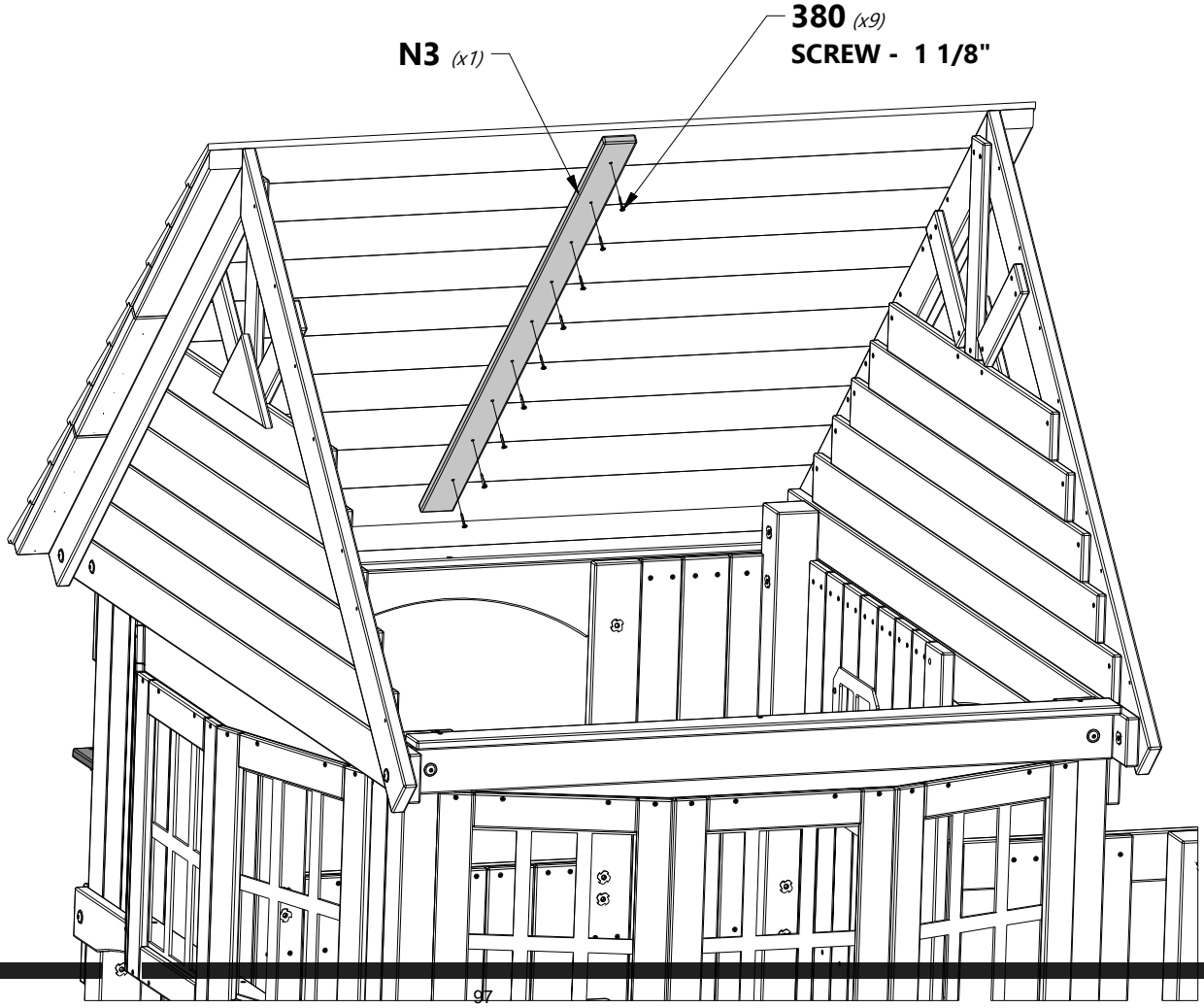

STEP 50

REPEAT STEPS 48 & 49 TO ATTACH LEFT SIDE ROOF PANELS.

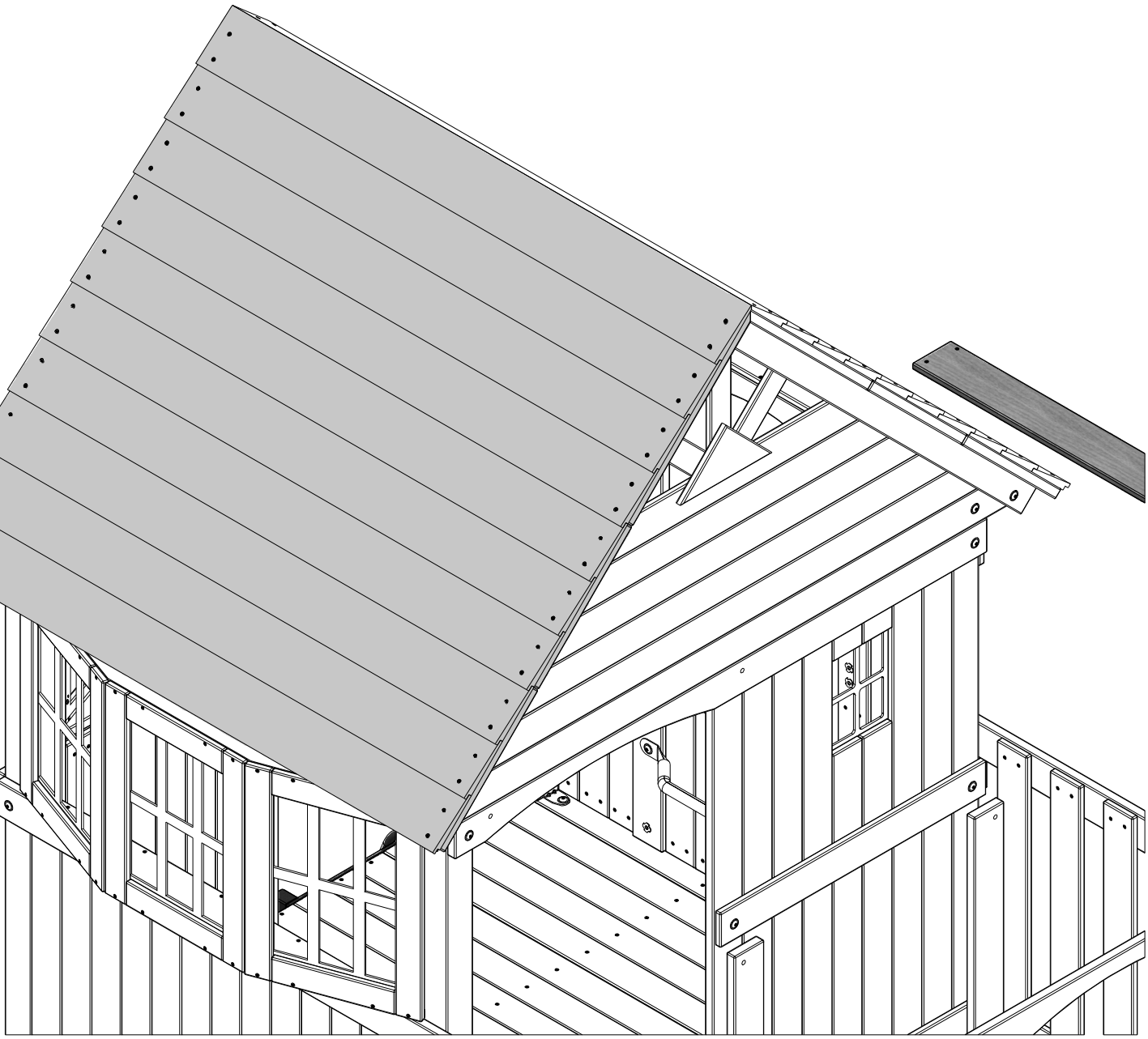

FORT ASSEMBLY

STEP 51

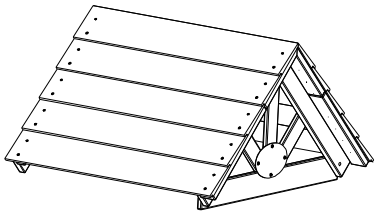

(1) **PORCH ROOF ASSEMBLY**

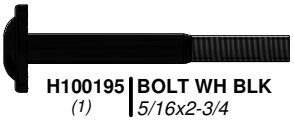

H100195 | **BOLT WH BLK** *(1)* *5/16x2-3/4*

H100194 | **BOLT WH BLK** *(2)* *5/16x2 1/2*

H100378 | **BOLT WH BLK** *(1)* *5/16x1 3/4*

H100379 | **T-NUT BLK** *(4)* *5/16*

H100198 | **WASHER LOCK EXT BLK** *(4)* *8x19*

(1) **PORCH ROOF ASSEMBLY**

379 *(x2)*
T-NUT - 5/16"

198 *(x2)*
WASHER - 8x19

194 *(x2)*
BOLT - 2 1/2"

379 *(x2)*
T-NUT - 5/16"

378 *(x1)*
BOLT - 1 3/4"

195 *(x1)*
BOLT - 2-3/4

198 *(x2)*
WASHER - 8x19

FORT ASSEMBLY

STEP 52

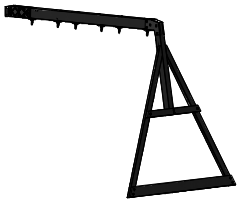

(1) **SWING BEAM ASSEMBLY**

H100657 (4) | **BOLT HEX BLK** *5/16x1 3/4*

H100478 (4) | **WASHER FLAT BLK** *8x27*

H100477 (4) | **WASHER SPLIT BLK** *5/16*

H100379 (4) | **T-NUT BLK** *5/16*

478 *(x4)*
WASHER - 8x27

477 *(x4)*
WASHER - 5/16

379 *(x4)*
T-NUT - 5/16"

657 *(x4)*
BOLT - 5/16x1 3/4

(1) **SWING BEAM ASSEMBLY**

H2
H14

USING H2 & H14 AS A GUIDE, DRILL (4) 5/16" HOLES THROUGH WALL PICKETS

STEP 53

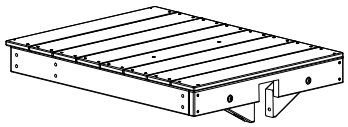

(1) CROWS NEST DECK ASSEMBLY

H100197 (2) | LAG SCREW WH BLK 5/16x2 1/2

H100192 (4) | NUT BARREL WH BLK 5/16x7/8

H100481 (4) | BOLT HEX BLK 5/16x1 1/4

H100086 (2) | SCREW PFH 8x1 1/2

H100478 (4) | WASHER FLAT BLK 8x27

H100477 (4) | WASHER SPLIT BLK 5/16

H100198 (2) | WASHER LOCK EXT BLK 8x19

H100199 (4) | WASHER LOCK EXT BLK 12x19

478 (x4)
WASHER - 8x27

477 (x4)
WASHER - 5/16

481 (x4)
BOLT - 1 1/4"

086 (x2)
SCREW - 1 1/2"

199 (x4)
WASHER - 12x19

192 (x4)
NUT BARREL - 7/8"

(1) CROW'S NEST DECK ASSEMBLY

197 (x2)
LAG SCREW - 2 1/2"

198 (x2)
WASHER - 8x19

STEP 54

A100396 (2) | L BRACKET 51x32x82x3.175

H100659 (8) | LAG SCREW BLK 5/16x1 1/2

H100477 (8) | WASHER SPLIT BLK 5/16

H100478 (8) | WASHER FLAT BLK 8x27

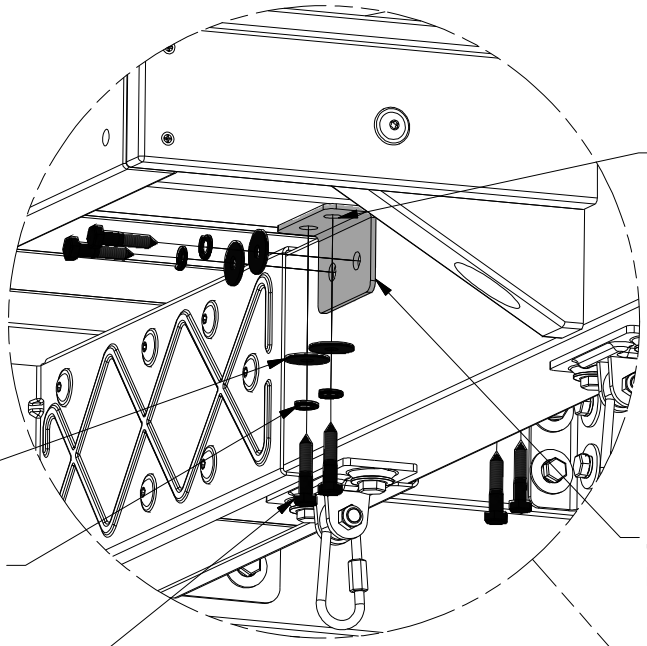

USING BRACKET AS A GUIDE.
DRILL 3/16" DIA PILOT HOLES 1" IN DEPTH.
(2 PLCS EACH SIDE).

478 *(x4)*
WASHER - 8x27

477 *(x4)*
WASHER - 5/16

659 *(x4)*
LAG SCREW - 1 1/2"

396 *(x2)*
L BRACKET 51x32x82x3.175

REPEAT ON OTHER SIDE

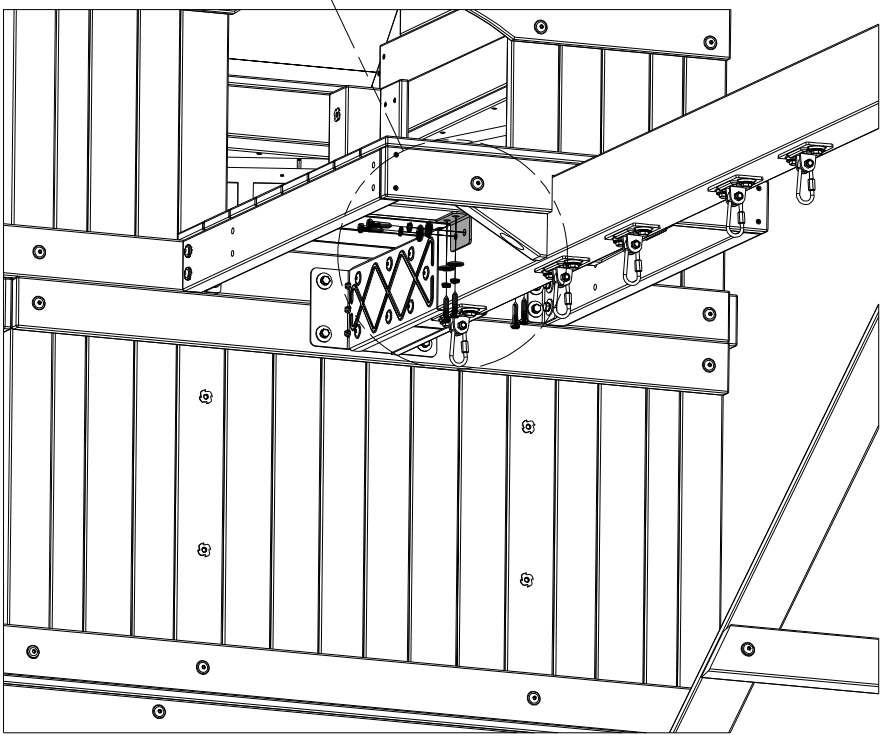

FORT ASSEMBLY

STEP 55

F3 (2) | **CROWS NEST WALL SUPPORT - W4L12697**
1 3/8"x2 3/8"x37 1/2" (36x60x952)

F2 (2) | **CROWS NEST WALL SUPPORT - W4L12696**
1 3/8"x2 3/8"x37 1/2" (36x60x952)

H100195 (8) | **BOLT WH BLK**
5/16x2-3/4

H100379 (4) | **T-NUT BLK**
5/16

H100198 (8) | **WASHER LOCK EXT BLK**
8x19

F2 *(x2)*

NOTE HOLE ORIENTATIONS

F3 *(x1)*

379 *(x4)*
T-NUT - 5/16"

F3 *(x1)*

198 *(x8)*
WASHER - 8x19

195 *(x8)*
BOLT - 2-3/4

FORT ASSEMBLY

STEP 56

H31 (2) | **CROWS NEST WALL RAIL - W4L12734**
1"x3 3/8"x34 1/2" (24x86x876)

H30 (1) | **CROWS NEST WALL RAIL - W4L12733**
1"x3 3/8"x29 7/8" (24x86x758)

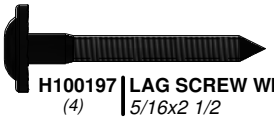

H100197 (4) | **LAG SCREW WH BLK**
5/16x2 1/2

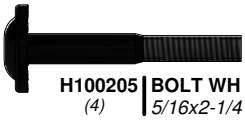

H100205 (4) | **BOLT WH BLK**
5/16x2-1/4

H100379 (4) | **T-NUT BLK**
5/16

H100198 (8) | **WASHER LOCK EXT BLK**
8x19

H31 *(x1)*

379 *(x4)*
T-NUT - 5/16"

205 *(x4)*
BOLT - 2 1/4"

198 *(x8)*
WASHER - 8x19

197 *(x4)*
LAG SCREW - 2 1/2"

H31 *(x1)*

H30 *(x1)*

FORT ASSEMBLY

STEP 57

A100340 (2) | L BRACKET 2.5x38x50x55

H100468 (2) | BOLT WH BLK 5/16x1

H100396 (2) | BOLT WH BLK 5/16x1/2

H100379 (4) | T-NUT BLK 5/16

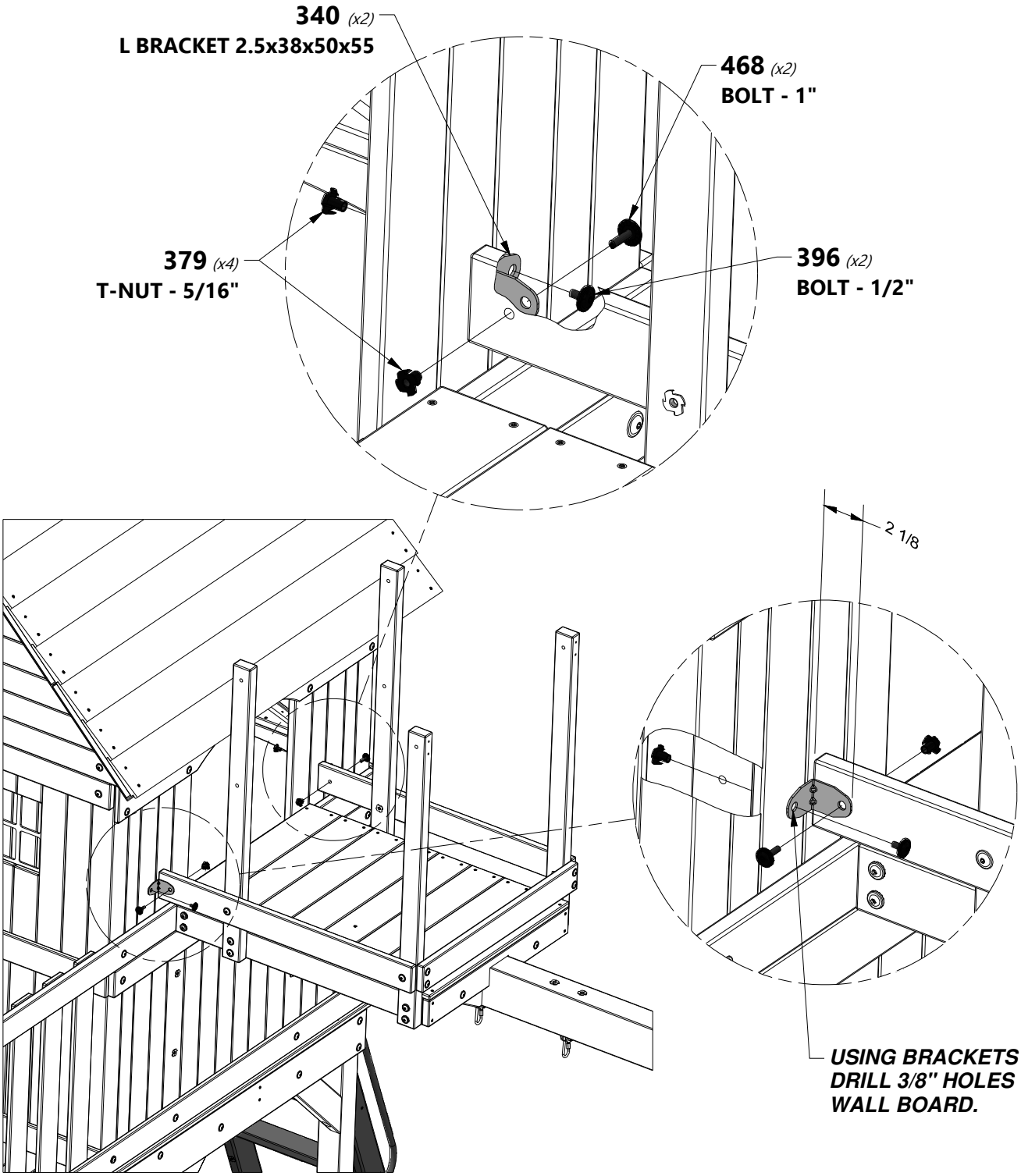

USING BRACKETS AS A GUIDE, DRILL 3/8" HOLES THROUGH WALL BOARD.

STEP 58

M4 (2) | **CROWS NEST WALL RAIL - W4L12746**
5/8"x3 3/8"x29 7/8" (16x86x758)

H29 (2) | **CROWS NEST WALL RAIL - W4L12732**
1"x3 3/8"x26 1/4" (24x86x666)

H30 (1) | **CROWS NEST WALL RAIL - W4L12733**
1"x3 3/8"x29 7/8" (24x86x758)

H100205 (4) | **BOLT WH BLK**
5/16x2-1/4

H100197 (4) | **LAG SCREW WH BLK**
5/16x2 1/2

H100458 (8) | **LAG SCREW WH BLK**
5/16x2

H100198 (16) | **WASHER LOCK EXT BLK**
8x19

H100379 (4) | **T-NUT BLK**
5/16

458 *(x8)*
LAG SCREW - 2"

198 *(x8)*
WASHER - 8x19

M4 *(x2)*

379 *(x4)*
T-NUT - 5/16"

H29 *(x1)*

198 *(x4)*
WASHER - 8x19

205 *(x4)*
BOLT - 2 1/4"

197 *(x4)*
LAG SCREW - 2 1/2"

198 *(x4)*
WASHER - 8x19

H30 *(x1)*

H29 *(x1)*

STEP 59

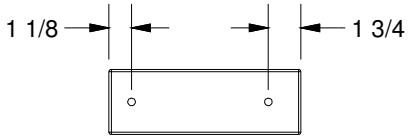

M32 (2) | **CROWS NEST WALL RAIL - W4L12768**
5/8"x3 3/8"x10" (16x86x254)

A100340 (2) | **L BRACKET 2.5x38x50x55**

H100457 (2) | **BOLT WH BLK**
5/16x2

H100459 (2) | **BOLT WH BLK**
5/16x1 1/4

H100396 (2) | **BOLT WH BLK**
5/16x1/2

H100379 (6) | **T-NUT BLK**
5/16

H100198 (2) | **WASHER LOCK EXT BLK**
8x19

USING BRACKETS AS A GUIDE, DRILL 3/8" HOLES THROUGH WALL

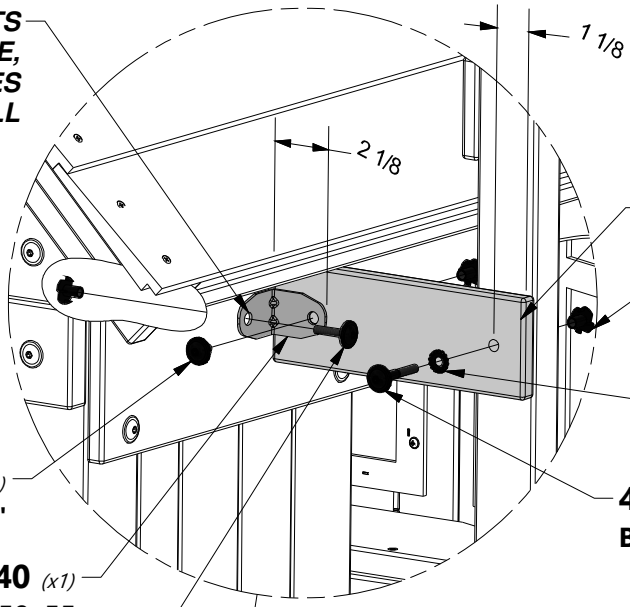

M32 *(x1)*

379 *(x3)*
T-NUT - 5/16"

198 *(x1)*
WASHER - 8x19

457 *(x1)*
BOLT - 2"

396 *(x1)*
BOLT - 1/2"

340 *(x1)*
L BRACKET 2.5x38x50x55

459 *(x1)*
BOLT - 1 1/4"

REPEAT ON OTHER SIDE

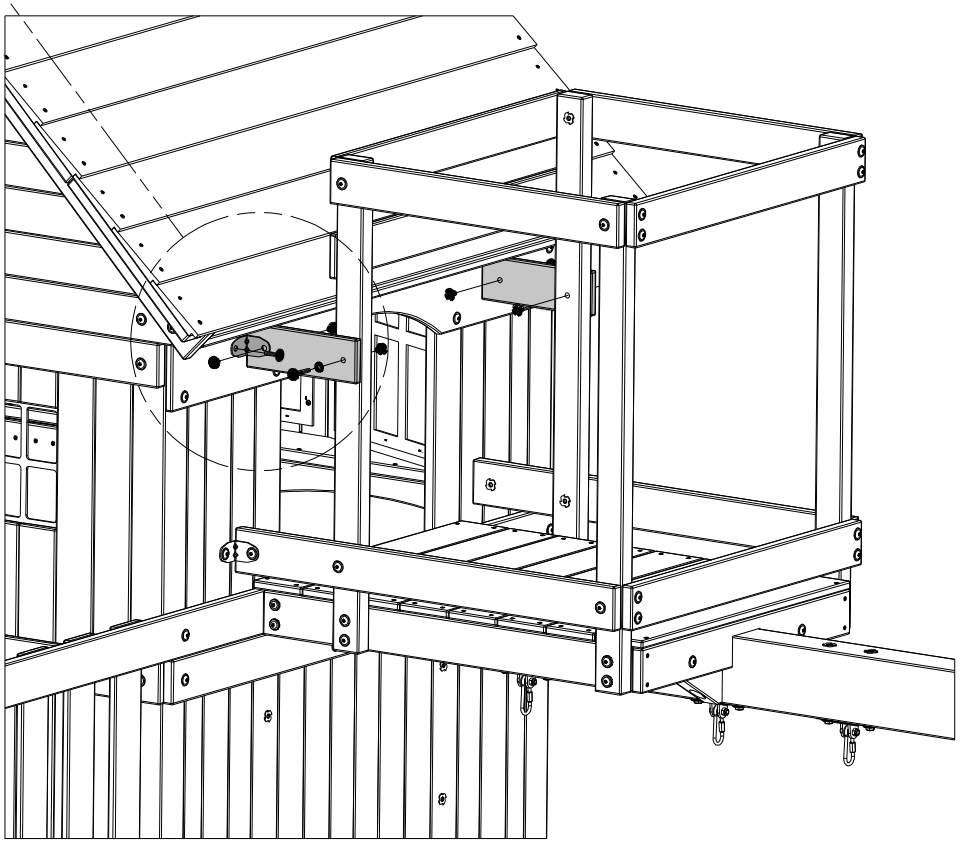

STEP 60

N4 (2) | **CROWS NEST WALL BOARD - W4L12779**
5/8"x2 3/8"x19" (16x60x483)

H100088 (4) | **SCREW PFH**
8x1 1/8

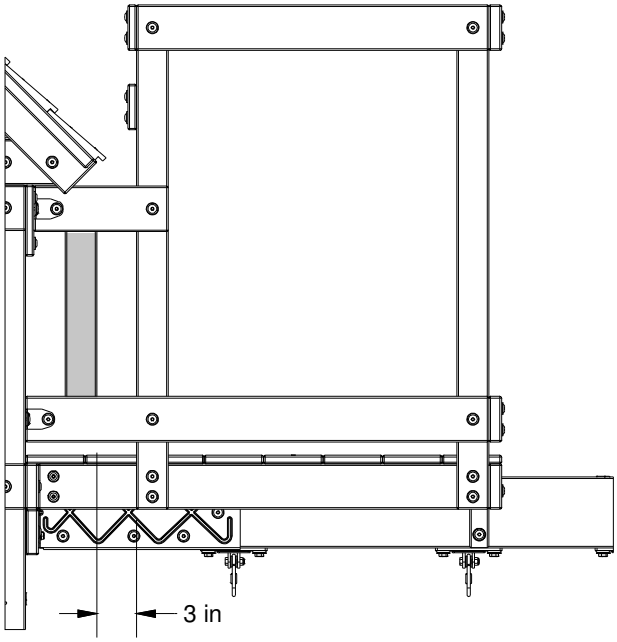

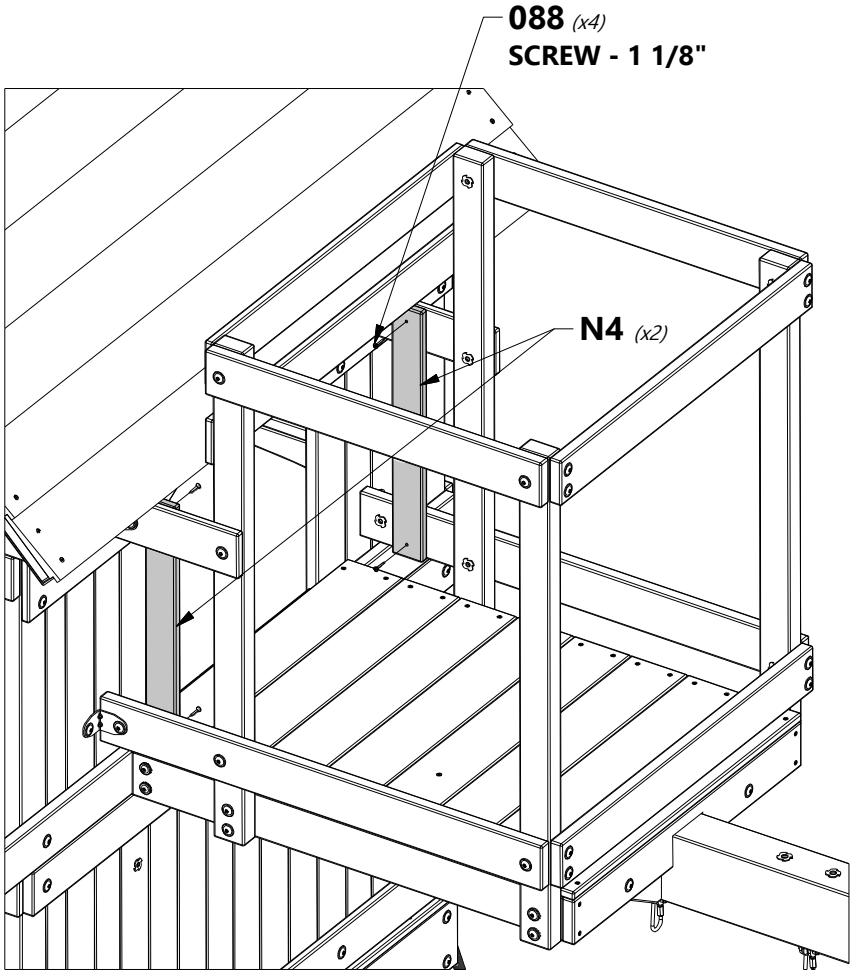

STEP 61

O1 (6) | **CROWS NEST WALL BOARD - W4L12783**
5/8"x1 3/8"x32 1/2" (16x34x825)

H100088 (12) | **SCREW PFH**
8x1 1/8

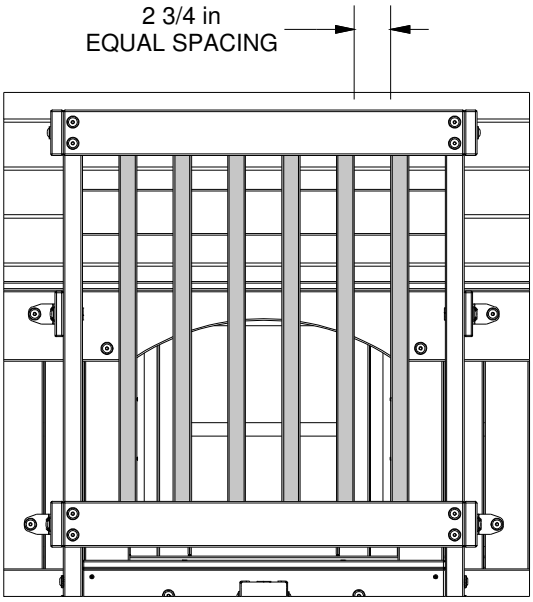

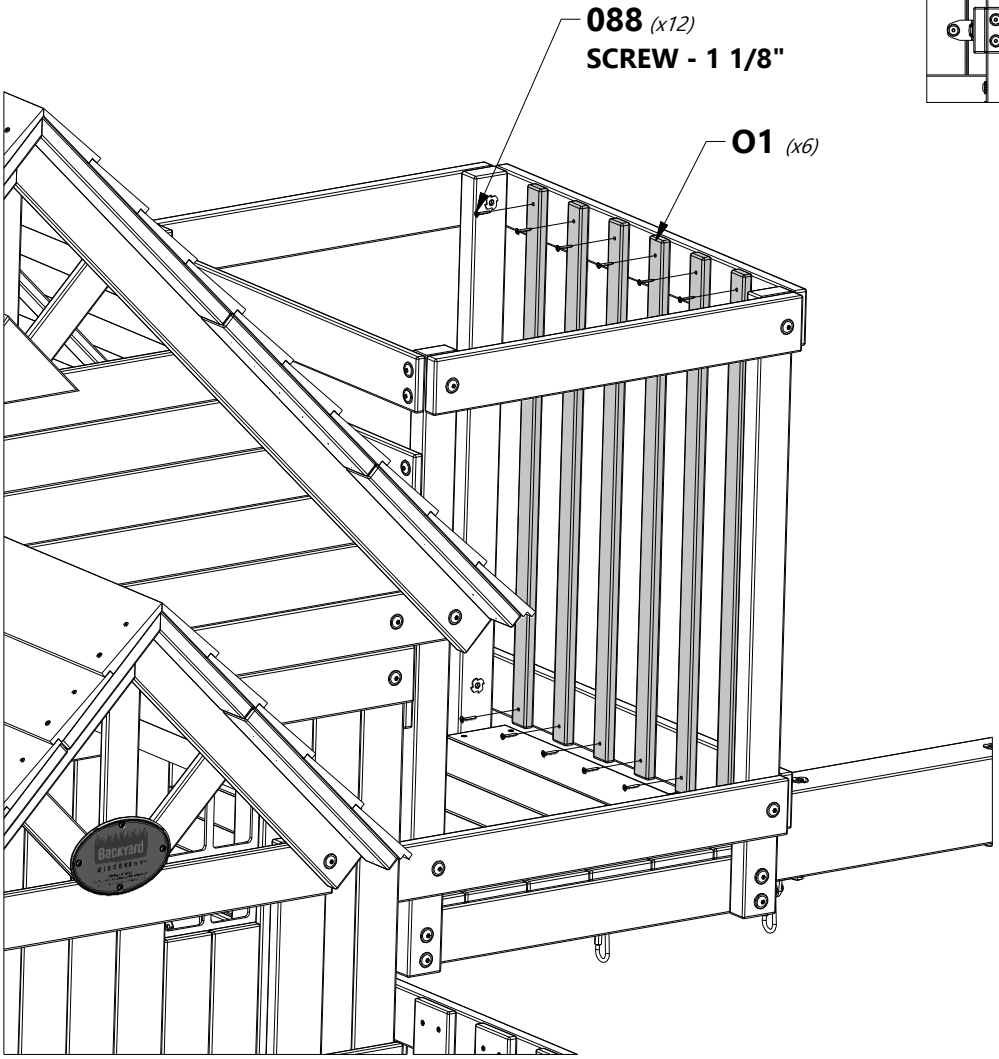

STEP 62

O1 (10) | **CROWS NEST WALL BOARD - W4L12783**
5/8"x1 3/8"x32 1/2" (16x34x825)

H100088 (20) | **SCREW PFH**
8x1 1/8

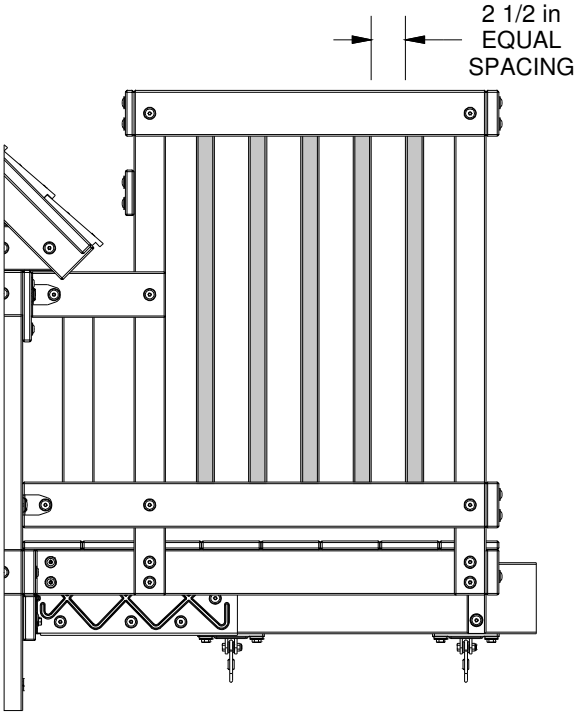

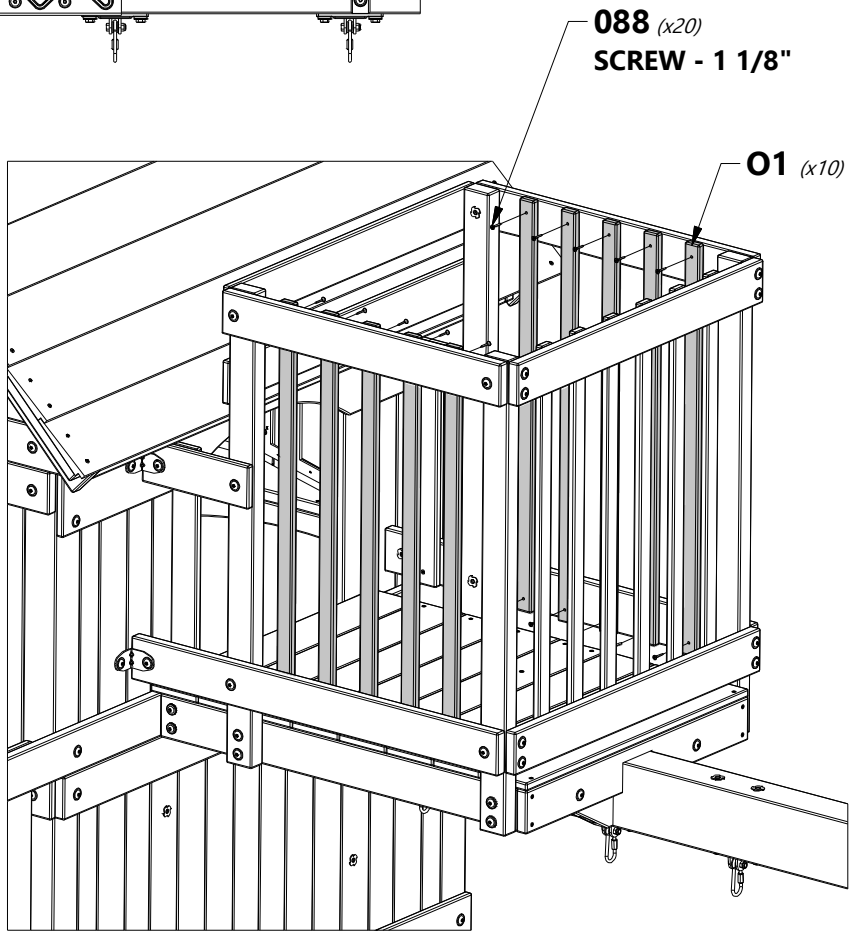

FORT ASSEMBLY

STEP 63

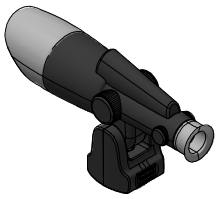

(1) **TELESCOPE**

F1 (1) | **TELESCOPE MOUNTING BLOCK - W4L12695**
1 3/8"x2 3/8"x3" (36x60x76)

H100082 (1) | **SCREW TAPPING**
14x2 1/2

H100091 (2) | **SCREW PFH**
8X2 1/4

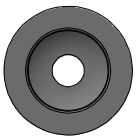

H100225 (1) | **FLANGE CUP WASHER**
9x34

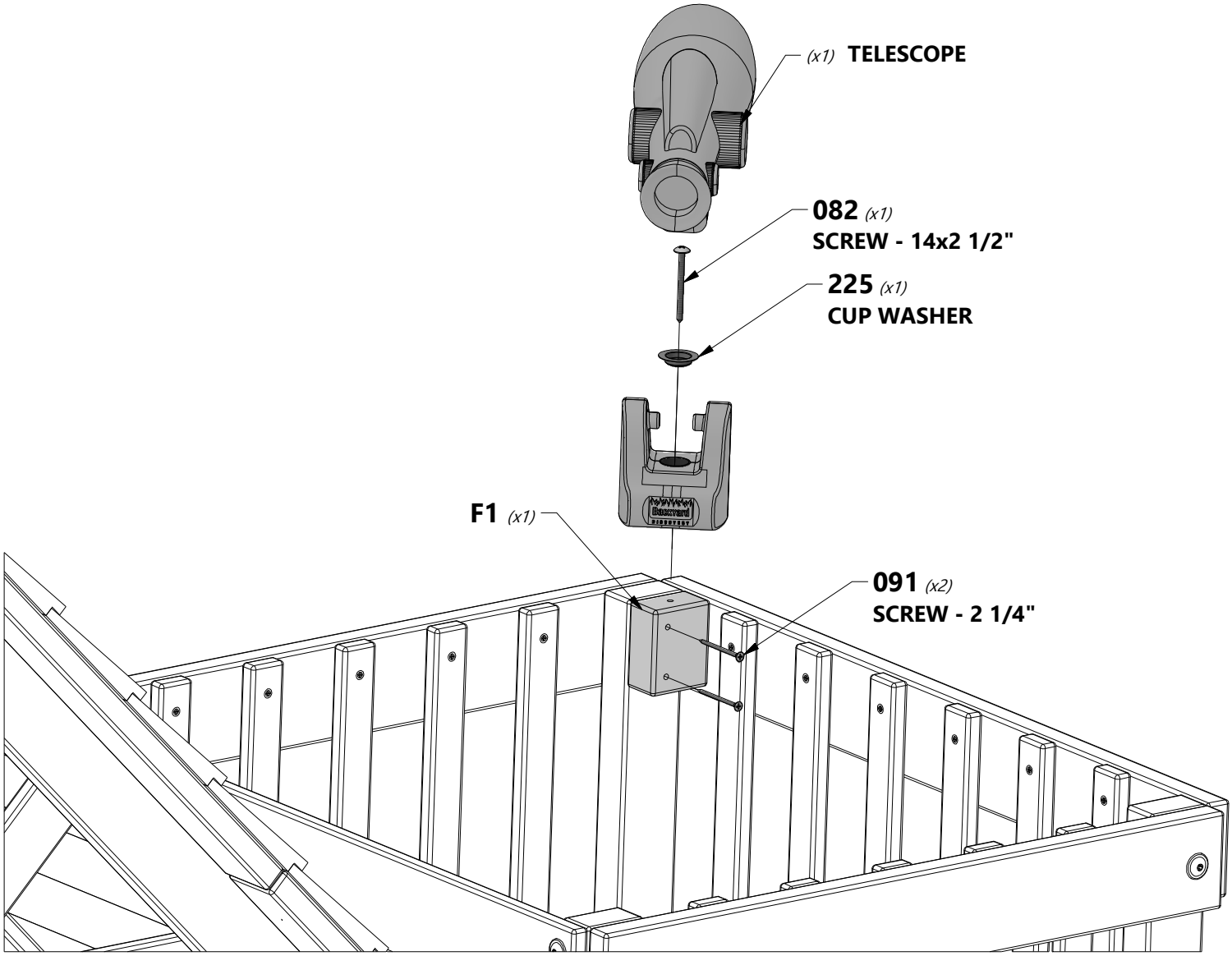

STEP 64

A100118 (4) | HAND GRIP METAL GREEN 381 c/c

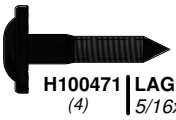

H100471 (4) | LAG SCREW WH BLK 5/16x1 1/2

H100468 (4) | BOLT WH BLK 5/16x1

H100379 (4) | T-NUT BLK 5/16

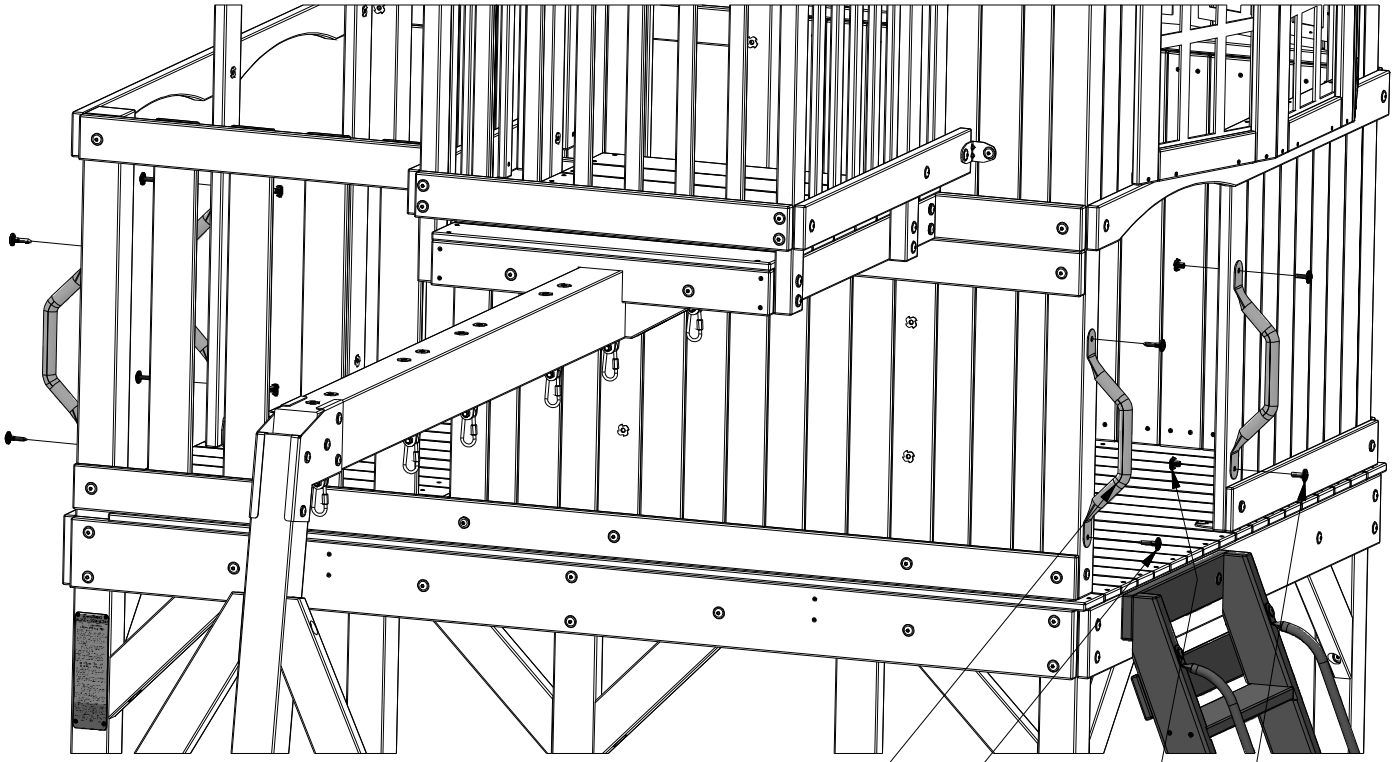

STEP 65

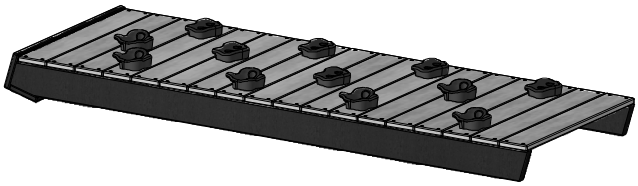

(1) **ROCK WALL ASSEMBLY**

H100407 (2) | **BOLT WH BLK** *5/16x1 1/2*

H100198 (2) | **WASHER LOCK EXT BLK** *8x19*

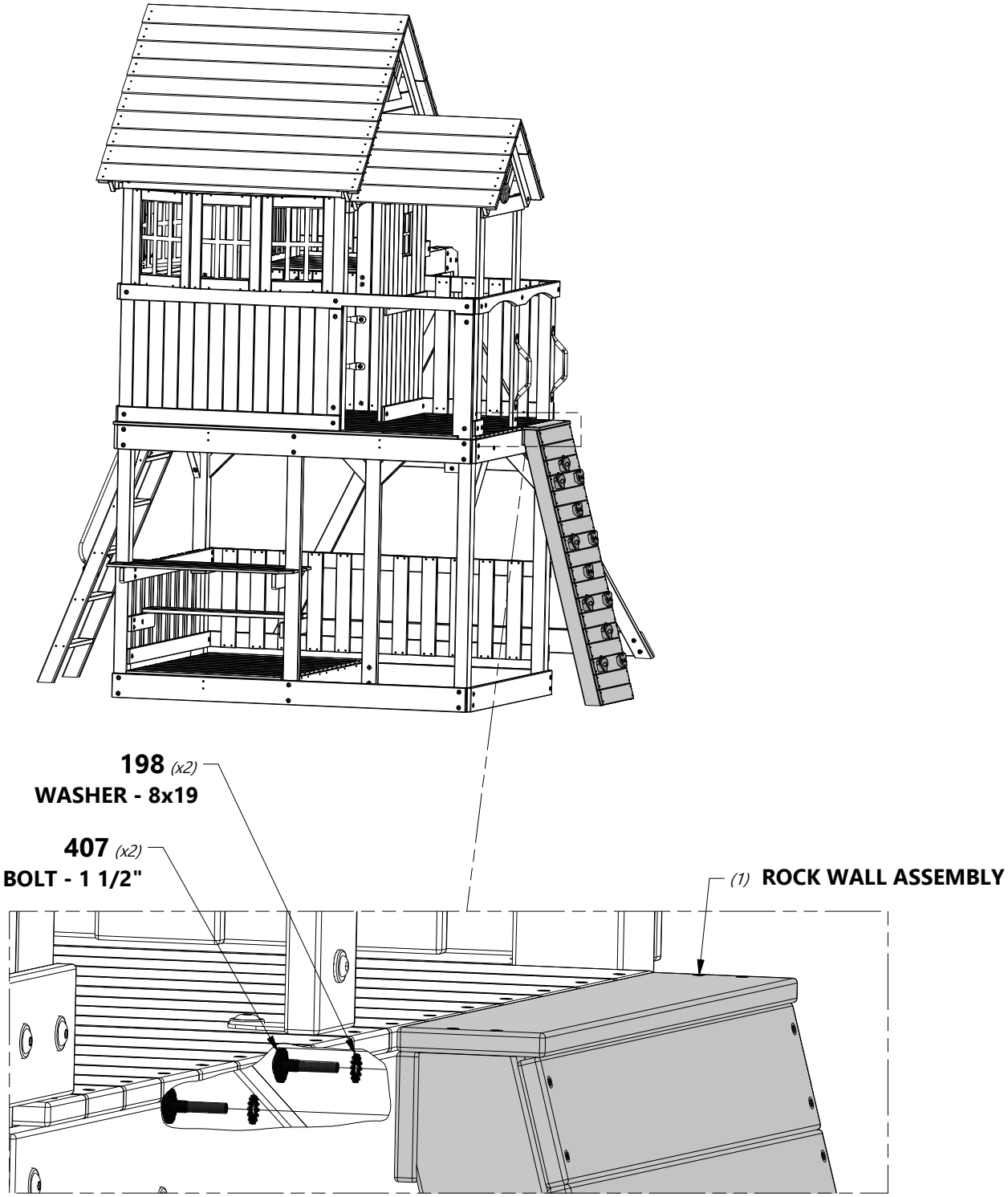

FORT ASSEMBLY

STEP 66

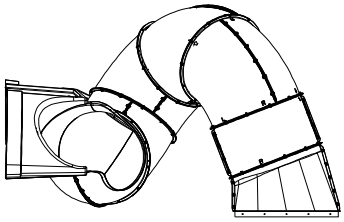

(1) **TUBE SLIDE ASSEMBLY**

H100797 *(18)* | **SCREW PWH BLK** *8x1*

FOR ASSEMBLY OF THE TUBE SLIDE, PLEASE REFER TO THE TUBE SLIDE ASSEMBLY MANUAL FOUND IN THE TUBE SLIDE BOX.

797 *(x18)*
SCREW - 1"

TUBE SIDE ASSEMBLY *(x1)*

TIP:
PLACE THE SLIDE ALL THE WAY INSIDE THE OPENING AS SHOWN. MAKE SURE TO PRESS THE SLIDE IN EVENLY AS YOU INSTALL IT WITH THE PROVIDED HARDWARE

STEP 67

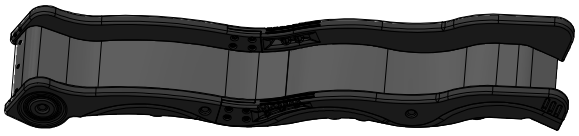

(1) **SLIDE ASSEMBLY**

H100115 *(3)* | **BOLT WH** *5/16x1/2*

H100074 *(3)* | **T-NUT** *5/16*

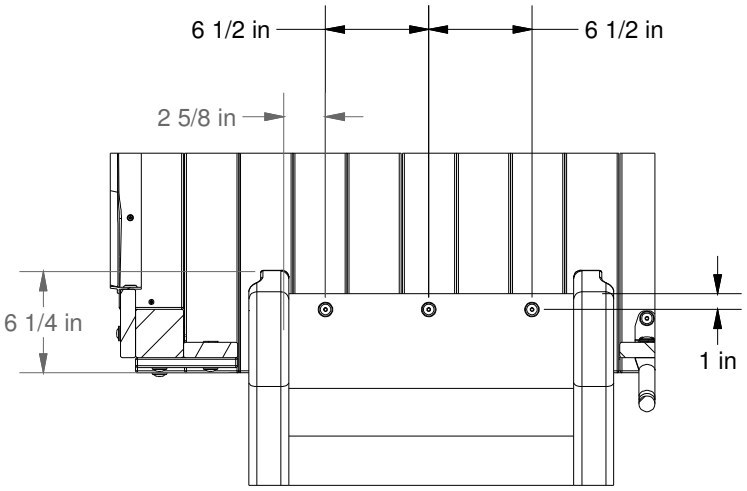

CENTER SLIDE IN OPENING. USING DIMENSIONS BELOW AS A TEMPLATE, DRILL (3) 3/8" HOLES THROUGH SLIDE & DECK FOR HARDWARE.

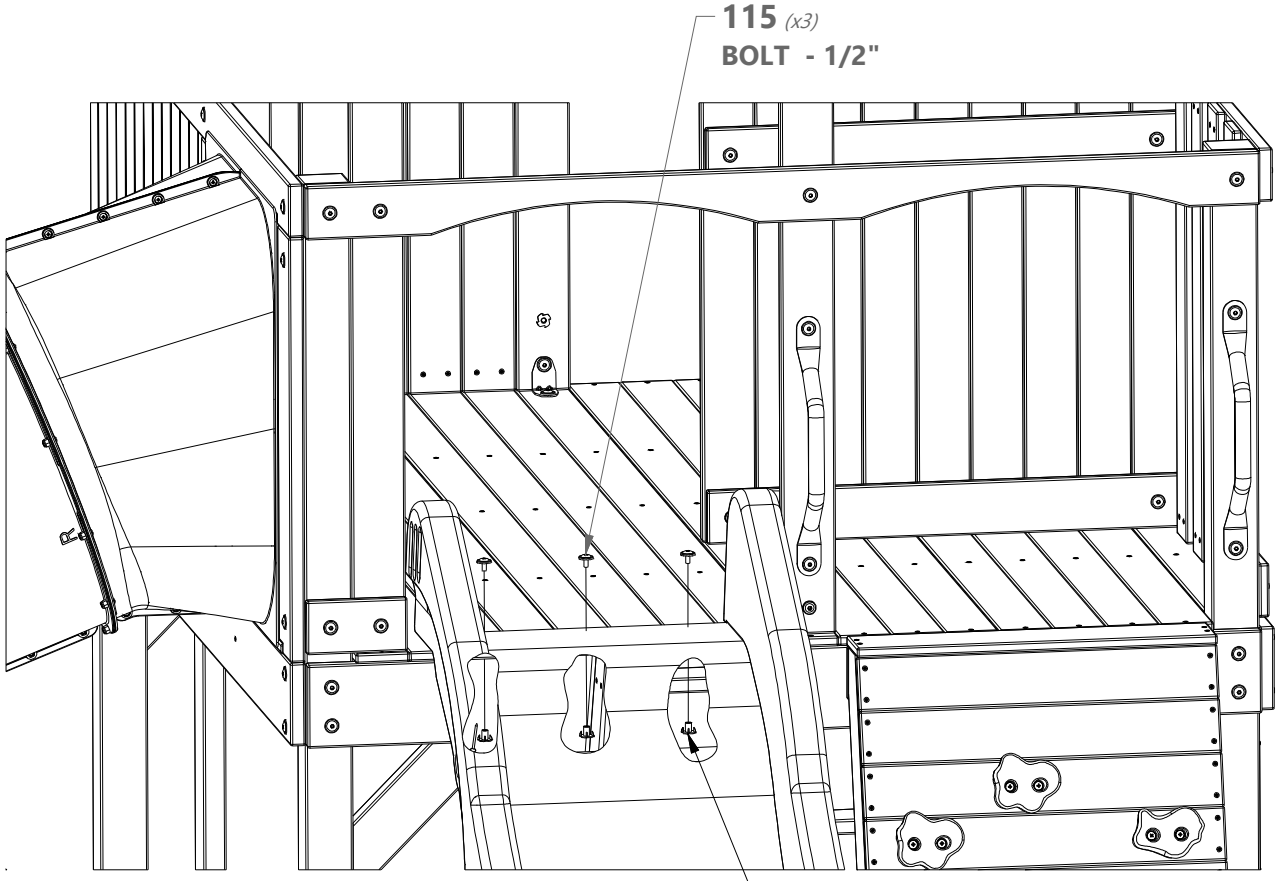

STEP 68

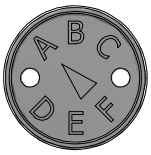

A100314 (1) | "A" REVISION TAG

H100408 (2) | SCREW PWH BLK 8x1/2

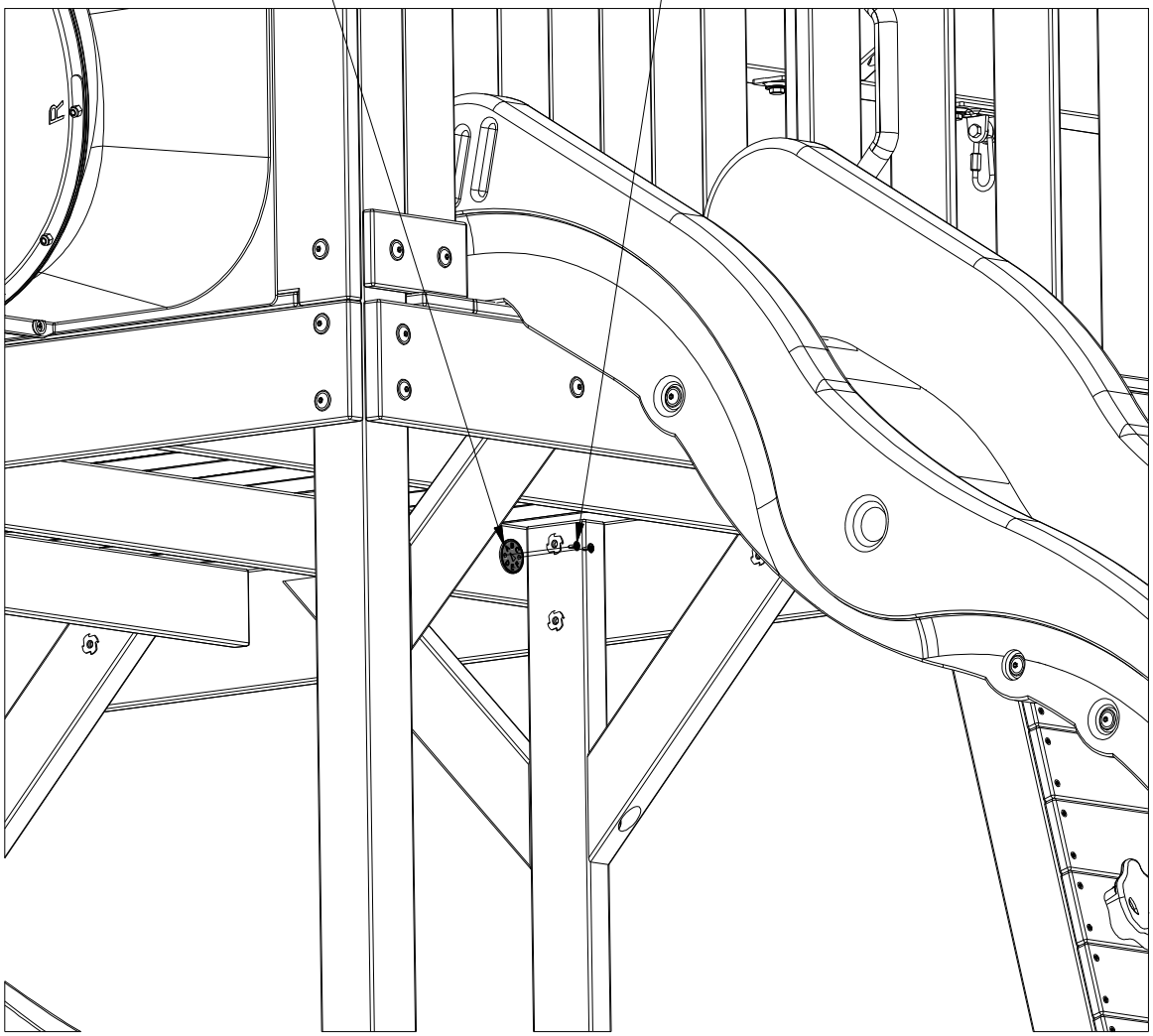

WEB SWING SETUP INSTRUCTIONS:

FOLLOW INSTRUCTIONS BELOW BEFORE USING THE WEB SWING.

H100832 *(4)* | **BOLT PTH** *1/4x3/4*

H100831 *(4)* | **NUT BARREL PTH BLK** *1/4x3/4*

IMPORTANT:
SLIDE ROPE LOOPS OVER TUBE ENDS FIRST!

SLIDE NARROW END OF TUBES INTO LARGER OPENING ***AFTER SLIDING ROPE LOOPS ONTO TUBES****.*

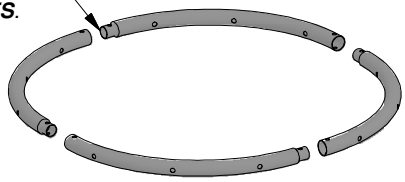

NOTE: ROPE WEBBING NOT SHOWN IN ILLUSTRATION FOR CLARITY.

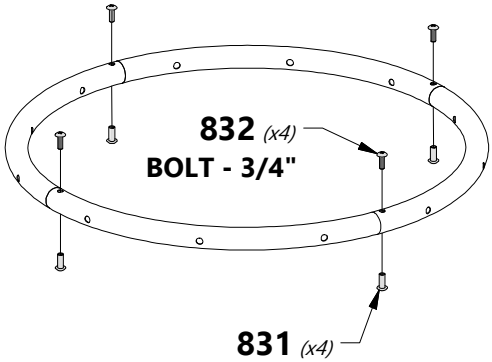

Note: ***It is important that the web swing hang level.***

IMPORTANT

TO ENSURE STRAIGHT SWINGING MOTION, ADJUST BOTH "S" BRACKETS UNTIL WEB SEAT IS LEVEL.

IMPORTANT:

SWING MUST BE SET AT A MINIMUM OF 8 INCHES OFF THE GROUND WHEN INSTALLED.

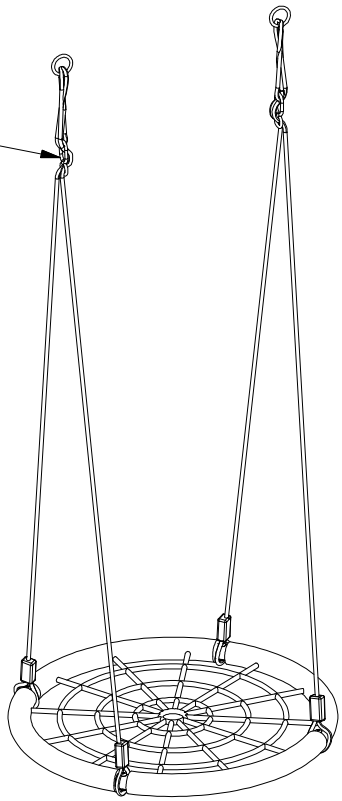

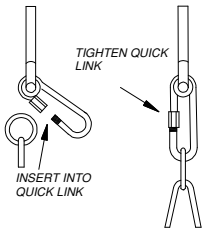

STEP 69

A100027 (2) | SWING SEAT GREEN 26"

A100069 (4) | QUICK LINK

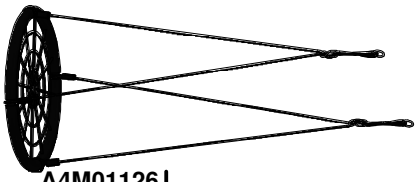

A4M01126 (x1) | 26" WEB SWING

A100047 (4) | CHAIN GREEN 57"

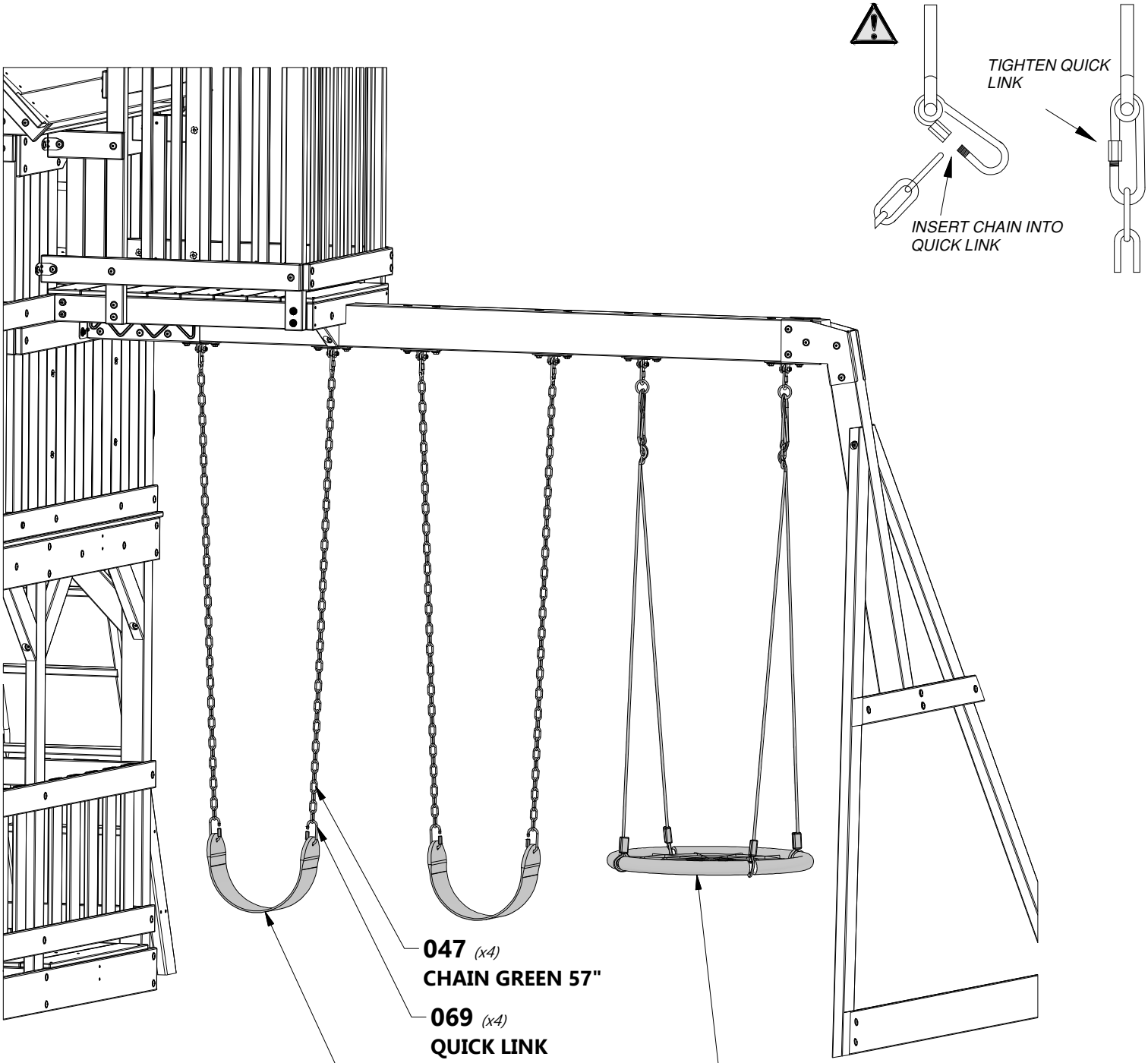

FORT ASSEMBLY

STEP 70

A100178 (4) | AUGER GROUND STAKE

A4M00527 (2) | GROUND STAKE REBAR

H100459 (1) | BOLT WH BLK 5/16x1 1/4

H100396 (1) | BOLT WH BLK 5/16x1/2

H100458 (4) | LAG SCREW WH BLK 5/16x2

H100199 (2) | WASHER LOCK EXT BLK 12x19

H100192 (1) | NUT BARREL WH BLK 5/16x7/8

H100469 (1) | NUT BARREL WH BLK 5/16x5/8

DETAIL "A"
TWIST STAKES INTO GROUND AGAINST GROUND BOARDS AND CORNER POSTS IN LOCATIONS SHOWN. USING STAKE AS A TEMPLATE, DRILL A 3/16" HOLE FOR LAGS.

DETAIL "B"
DRIVE STAKE INTO GROUND AT LOCATIONS SHOWN. USING STAKE AS A TEMPLATE, DRILL A 7/16" HOLE FOR HARDWARE.

DETAIL "C"
DRIVE STAKE INTO GROUND AT LOCATIONS SHOWN. USING STAKE AS A TEMPLATE, DRILL A 7/16" HOLE FOR HARDWARE.

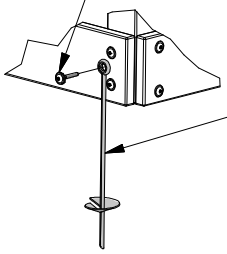

DETAIL 'A'

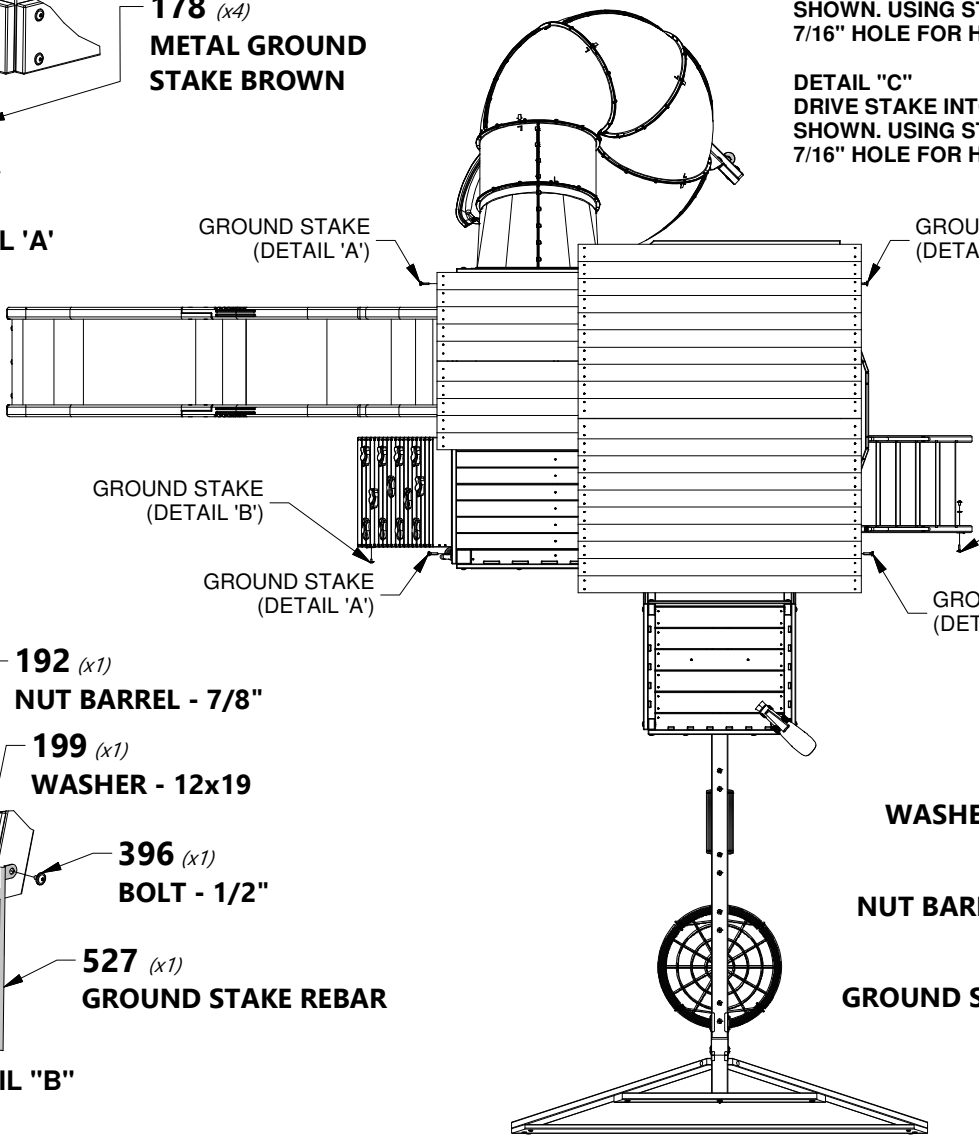

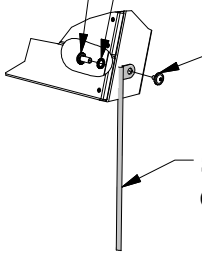

DETAIL "B"

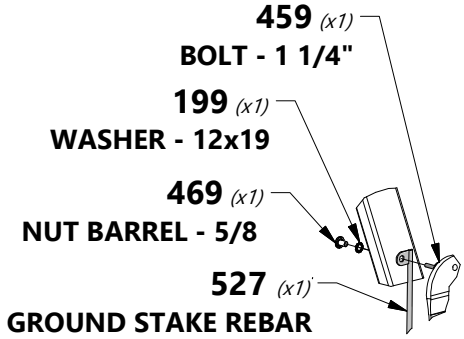

DETAIL 'C'

FINAL STEP
DOUBLE CHECK EVERY BOLT, SCREW AND NUT FOR TIGHTNESS. MAKE SURE EVERY BOARD IS SECURE AND MAKE SURE THE PLAY SET IS LEVEL.
ENJOY YOUR NEW PLAY SET!
NOTE:
FAILURE TO ATTACH GROUND STAKES COULD CAUSE INJURY AND WILL VOID WARRANTY!