Installation Steps:

①

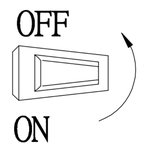

1. Turn off the power.

②

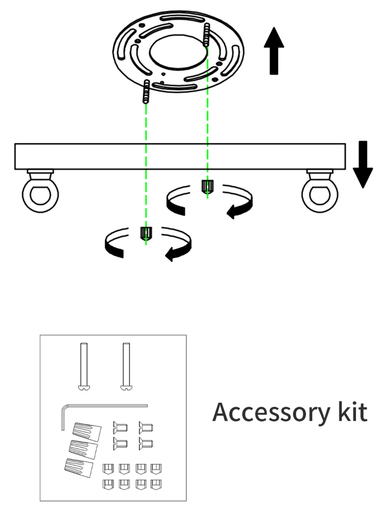

2. Unscrew the two disks then install the two accessories (F).

③

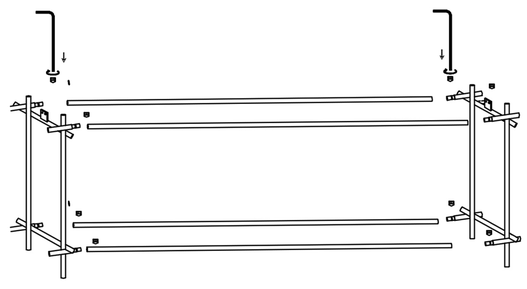

3. Align the round pipe (N) with the round pipe holder (L) and tighten the screw (K) with the wrench (Q). The installation method is the same for both sides.

④

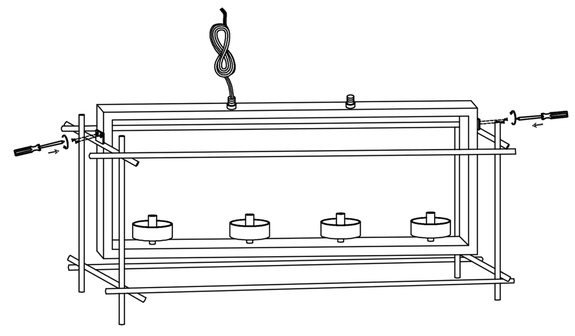

4. Align the outer frame with the two holes of the square tube frame (J), tighten the machine wire (M) with a screwdriver and fix it. The installation method is the same for both sides. The main light frame assembly is complete.

⑤

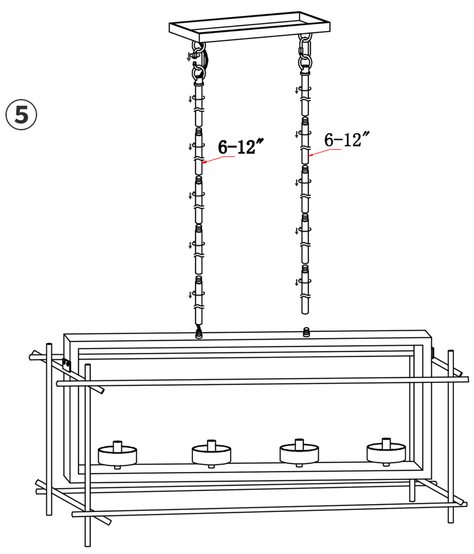

5. Both sides of the power cord need to pass through six straight pipes (I), the last one must be a straight pipe with a hanging ring (H). Twist the straight pipe from the bottom to the top, twist to ensure that the power cord from the middle of each pipe through, and finally the movable buckle (G) into the square box (E) of the hanging ring and the straight pipe ring and twist tight. The installation method is the same for both sides.

⑥

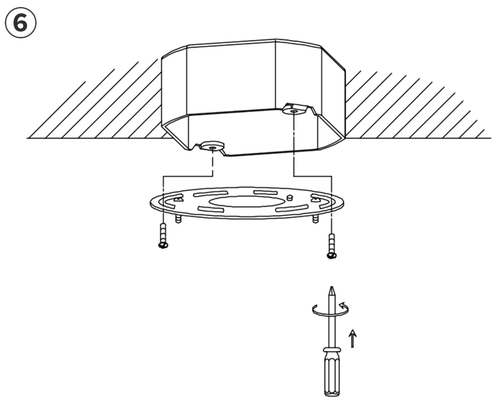

6. Use two machine wire (B) to tighten the pegboard (D) with the junction box (A) and install the pegboard (D).

⑦

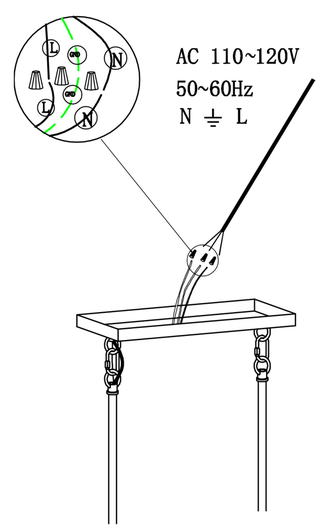

7. The positive, negative and ground wires correspond to and connect with the power line, and wrap the terminal cap (C) with adhesive tape.

⑧

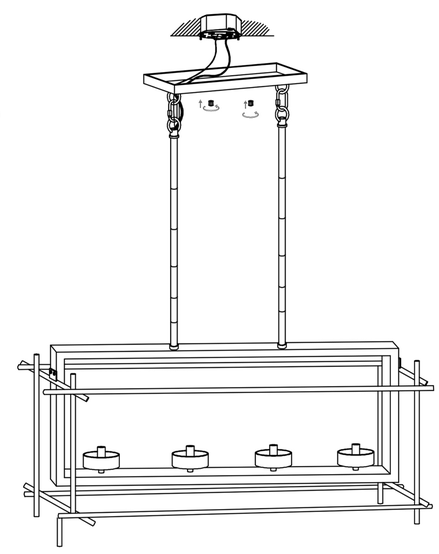

8. Lift the whole lamp upward, align the two holes on the square box (E) with the machine wire (B) on the pegboard (D), then tighten the fittings (F) and hang the lamp holder.

⑨

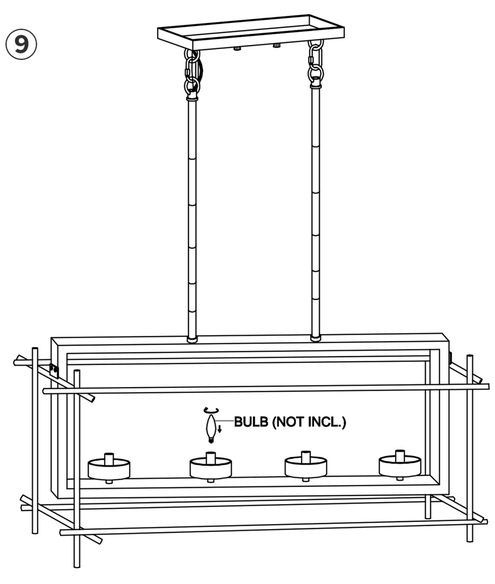

9. Install the bulb.

⑩

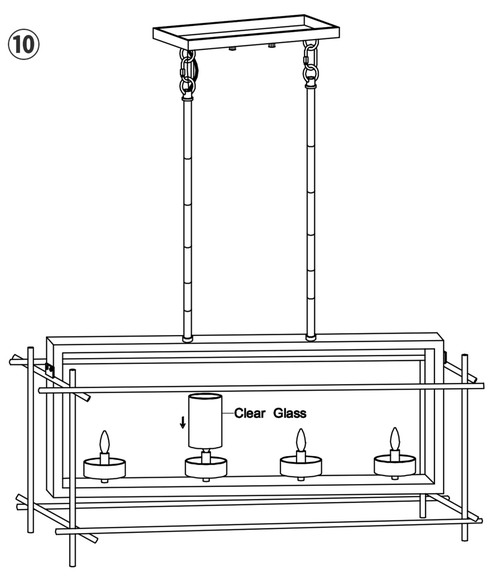

10. Install the glass cover (P).

⑪

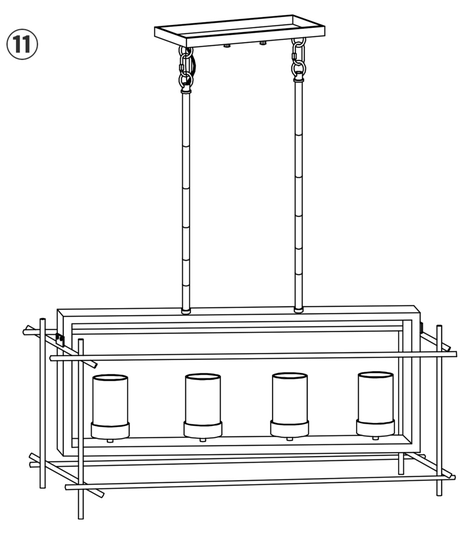

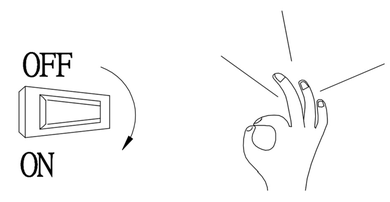

11. Finish the installation and turn on the light.

Notice: This light fixture should be installed in accordance with all applicable, local installation codes, and by a person familiar with the construction and operation of it, as well as the hazards involved. Inspect items and contents carefully. If any damage or defect is found, do not install it.

Accessories:
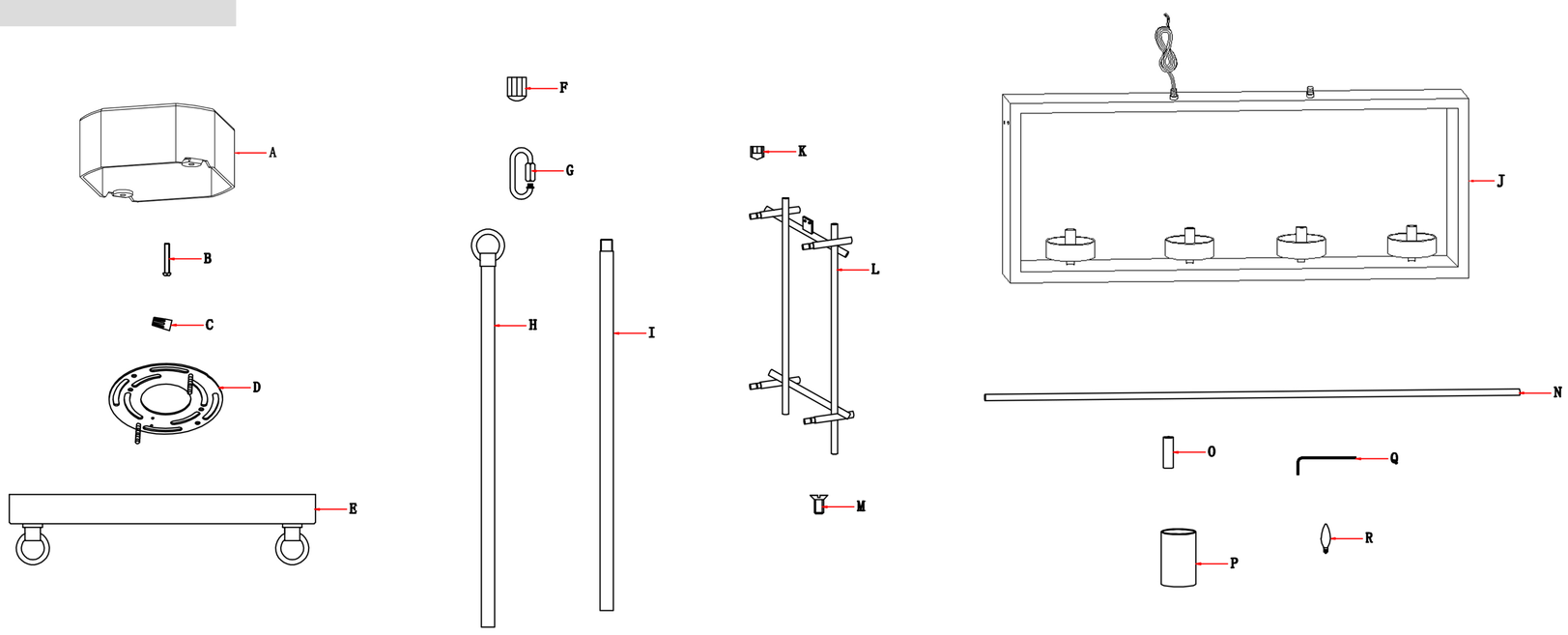
A: Junction box*0
B: Inch cross plate head machine wire*2
C: U.S. standard wiring cap * 3
D: eight hanging plate * 1
E: square box * 1
F: decorative grain * 2
G: activity buckle * 2
H: hanging ring + straight pipe * 2
I: Straight pipe *10
J: Square frame *1
K: Hexagonal machine rice screws *8
L: Round tube frame*2
M: Cross countersunk head machine wire *4
N: Round pipe*4
O: Casing*4
P: Clear glass*4
Q: Wrench*1
R: Bulb*0