BRC04X08X08BOA00SWR

3 1/2"W X 8"D X 8"H BALBOA SMOOTH BRACE, WESTERN RED CEDAR

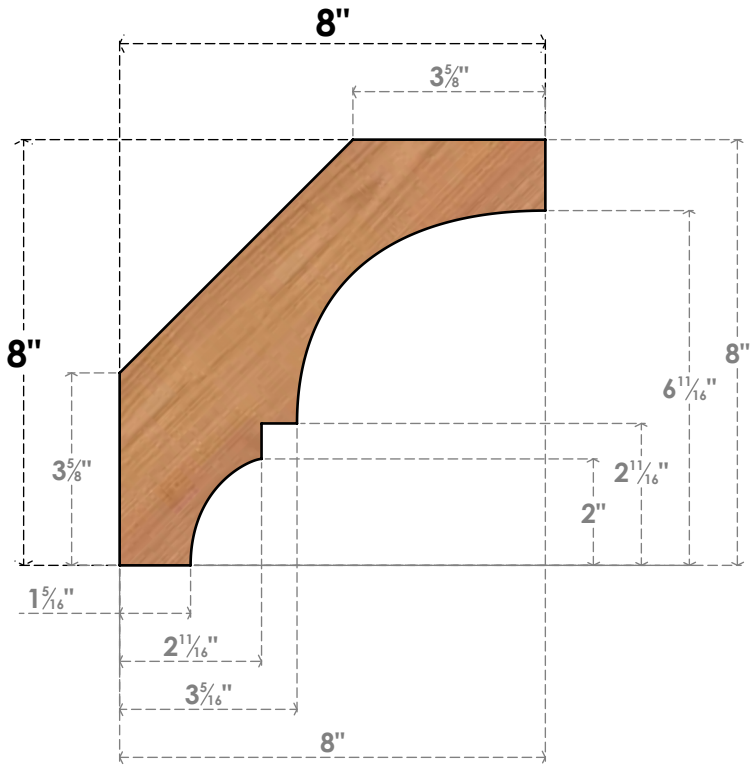

SIDE

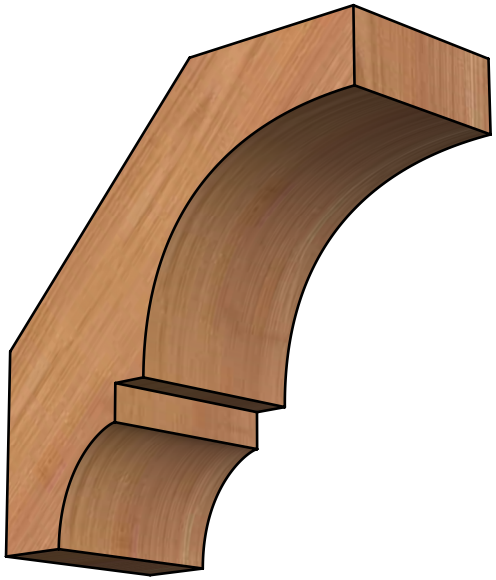

FRONT

EKENA MILLWORK

EKENA MILLWORK
2300 WEST MAIN ST.
CLARKSVILLE, TX 75426
TOLL FREE: 866-607-0453
WWW.EKENAMILLWORK.COM

NOTES
1. INSTALLATION TO BE COMPLETED IN ACCORDANCE WITH MANUFACTURER'S SPECIFICATIONS.
2. DRAWING MAY NOT BE TO SCALE
3. THIS DRAWING IS INTENDED FOR DESIGN AND PLANNING PURPOSES ONLY.
4. ALL INFORMATION CONTAINED HEREIN WAS CURRENT AT THE TIME OF DEVELOPMENT BUT MUST BE REVIEWED AND APPROVED BY THE PRODUCT MANUFACTURER TO BE CONSIDERED ACCURATE.
5. PRODUCTS ARE NOT KILN DRIED. THIS ITEM IS UNIQUE AND WILL CONTAIN THE NATURAL VARIATIONS THAT THE WOOD SPECIES OFFERS. THIS MAY RESULT IN VARIATIONS UP TO 1/4"

Revision Date : 06/11/2021