Distributed by Garvee

GARVEE

www.garvee.com

INSTRUCTION MANUAL

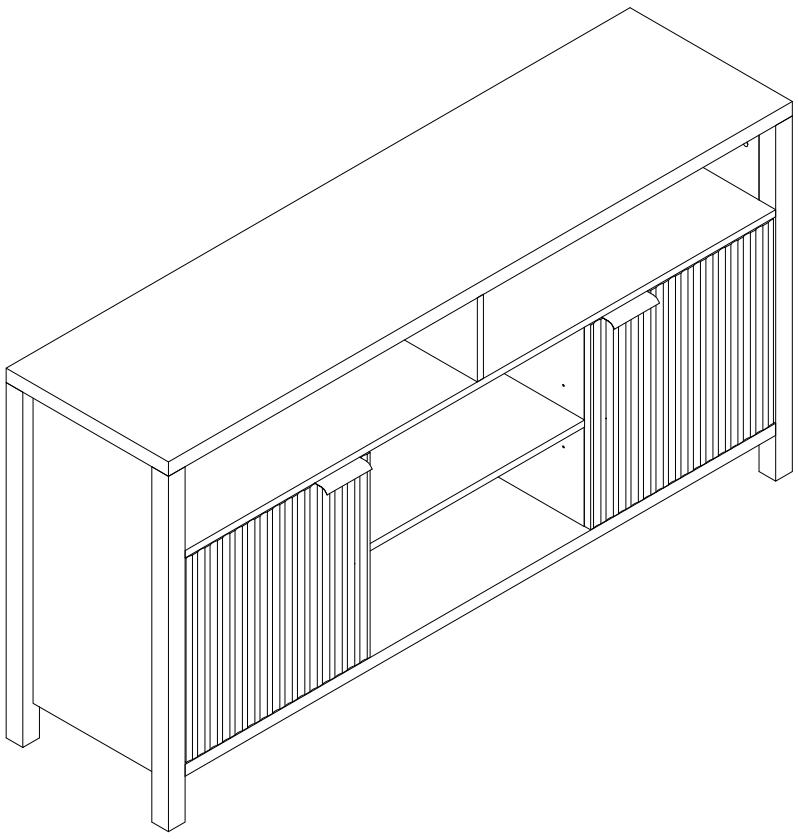

Part list

① 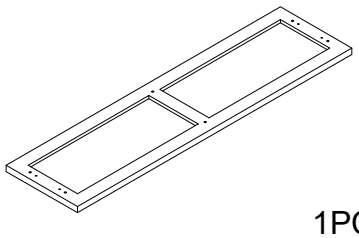 1PCS	⑧ 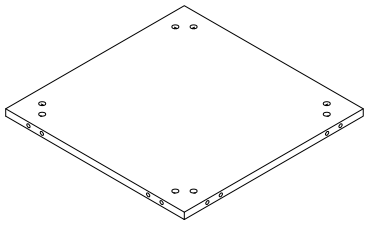 2PCS	⑮ 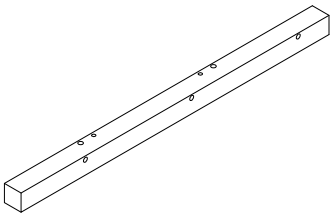 1PCS
② 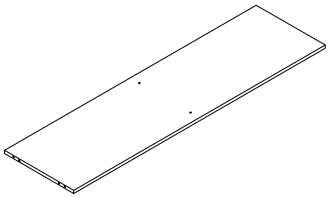 1PCS	⑨ 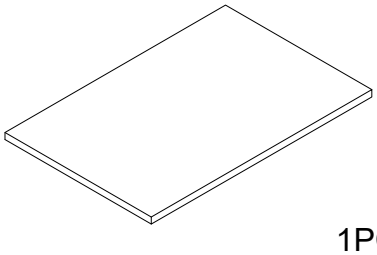 1PCS	⑯ 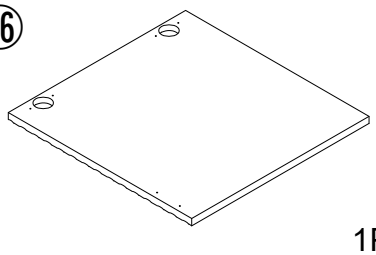 1PCS
③ 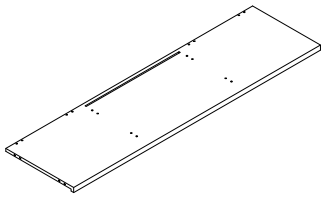 1PCS	⑩ 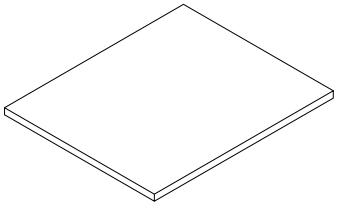 2PCS	⑰ 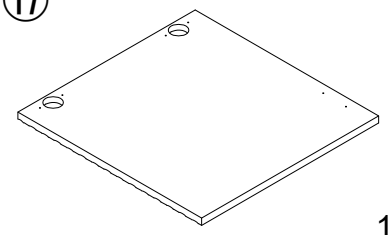 1PCS
④ 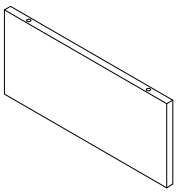 1PCS	⑪ 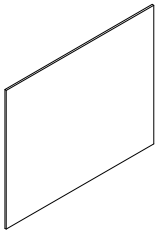 1PCS	⑱ 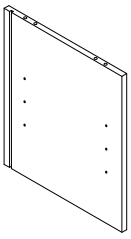 1PCS
⑤ 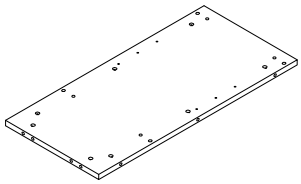 1PCS	⑫ 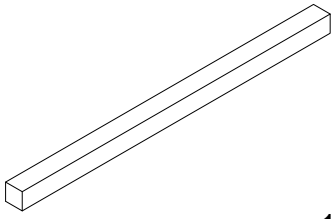 1PCS	⑲  2PCS
⑥ 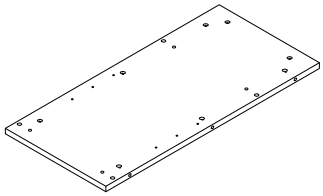 1PCS	⑬ 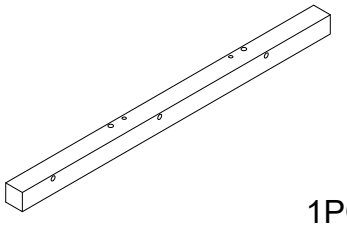 1PCS	
⑦ 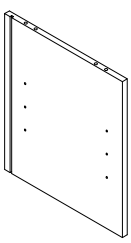 1PCS	⑭ 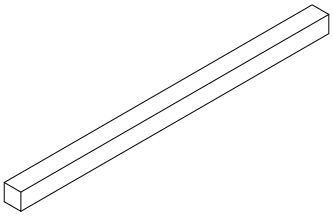 1PCS	

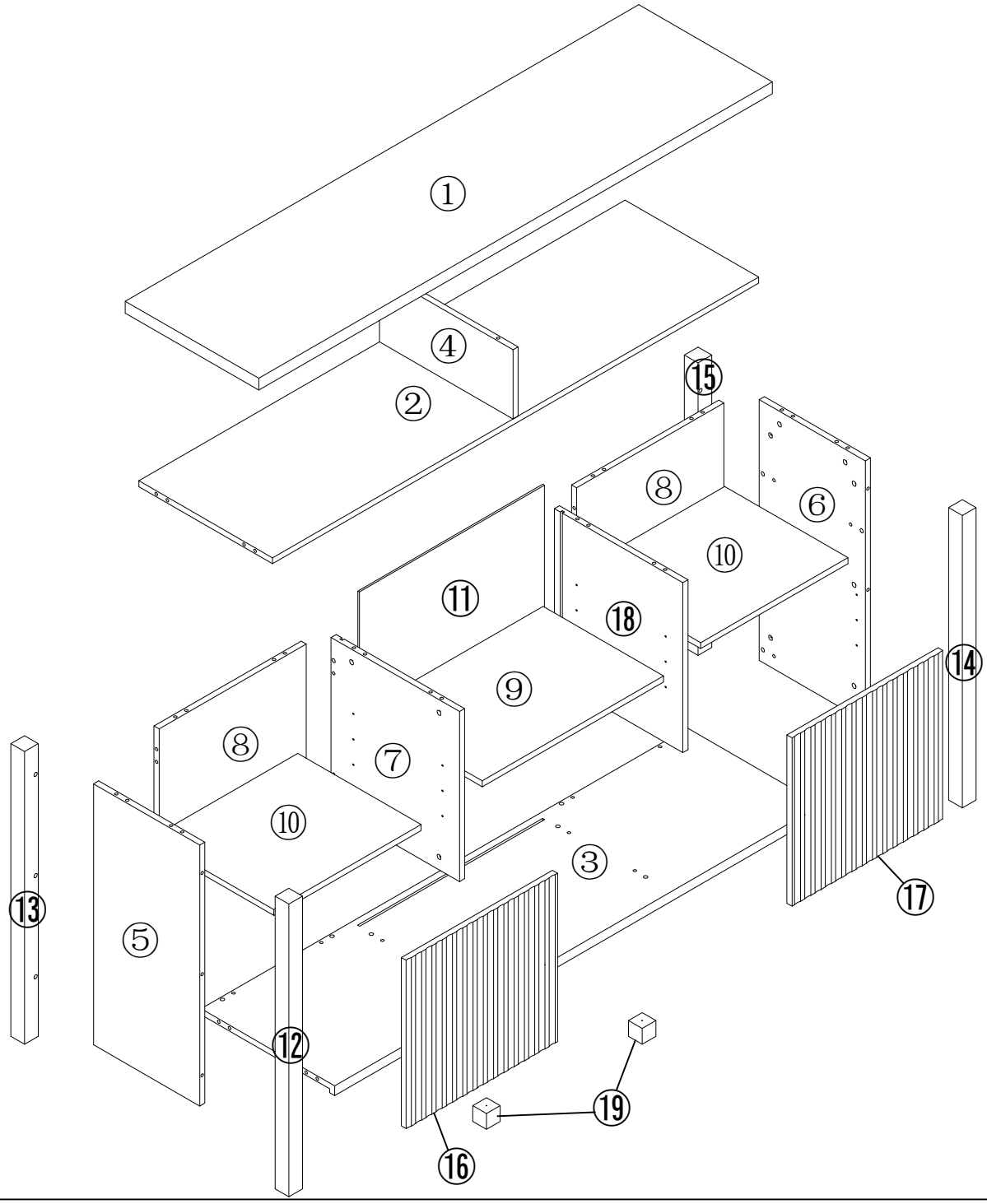

Hardware list

A  52+1PCS	B  52+1PCS	C 8*40  36+2PCS	D 3.5*14  20+1PCS	E  2PCS
F  12PCS	G  4PCS	H  4PCS	J  J1 J2 J3 J4 2SET	K 3.5*12  12+1PCS
L 3.5*40  2PCS				

STEP 1

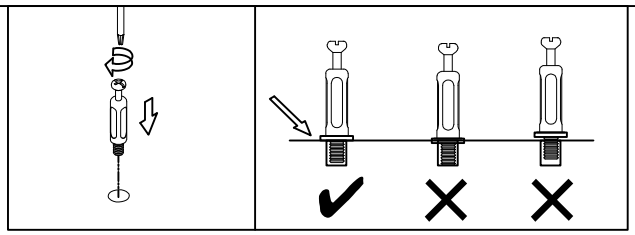

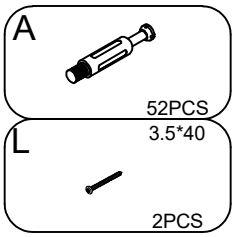

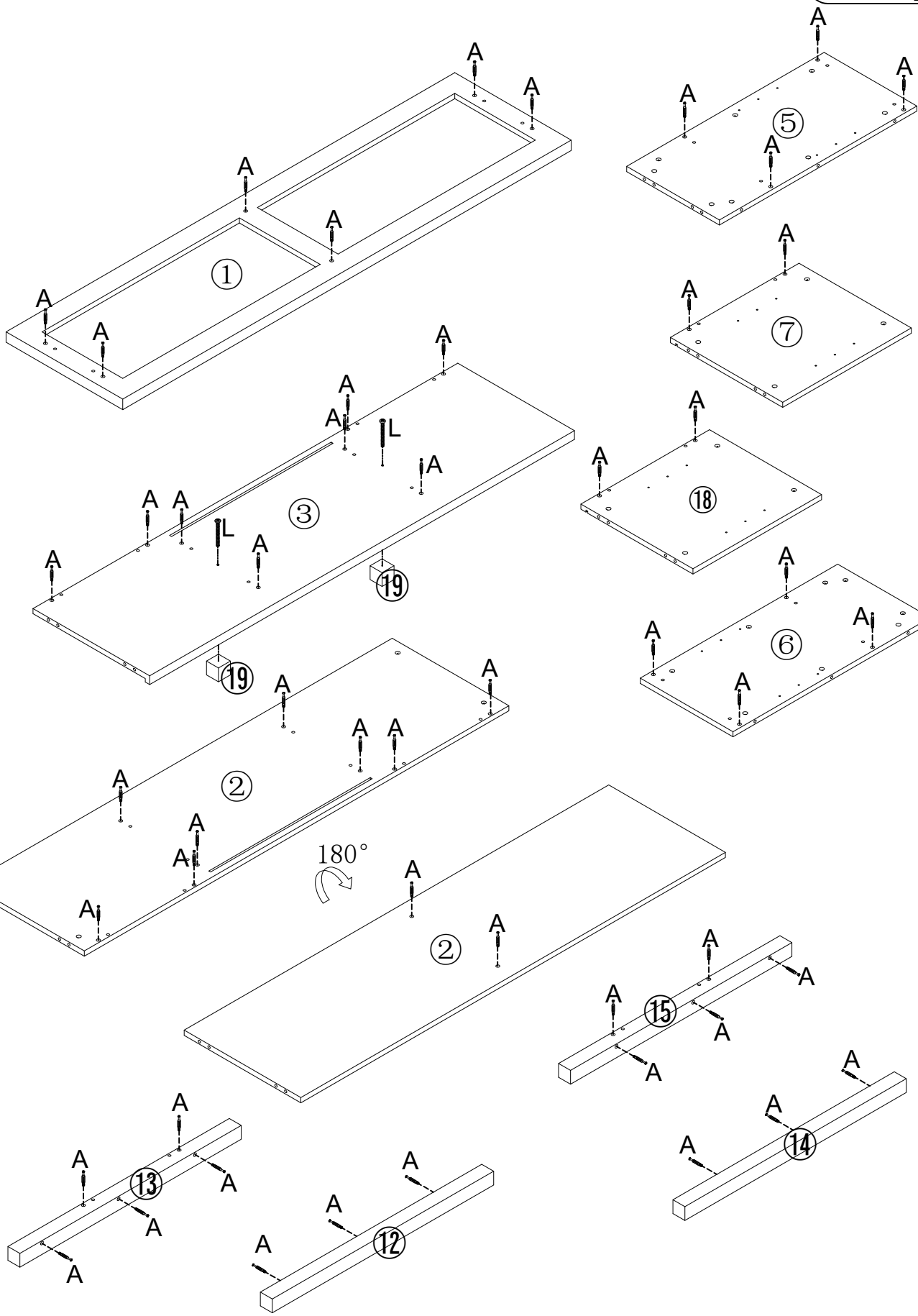

STEP 2

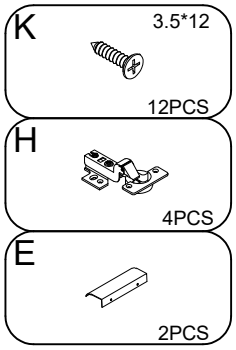
K
3.5*12
12PCS
H
4PCS
E
2PCS

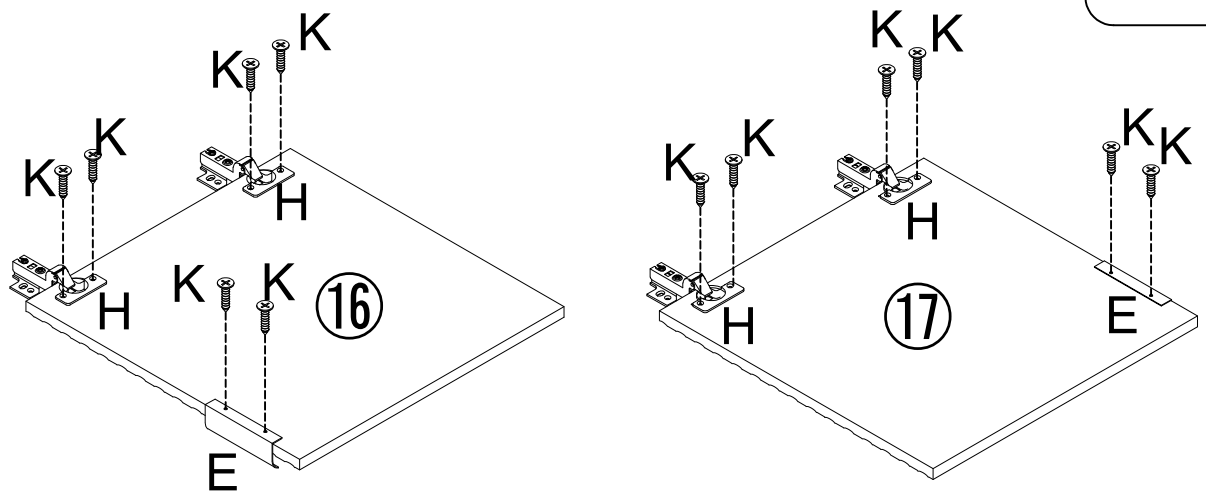
K
K
K
K
H
K
K
16
H
E
K
K
K
K
H
17
H
K
K
E

STEP 3

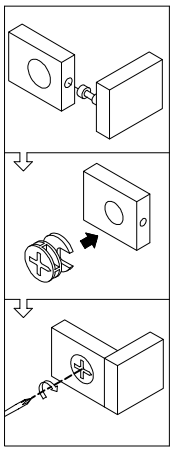

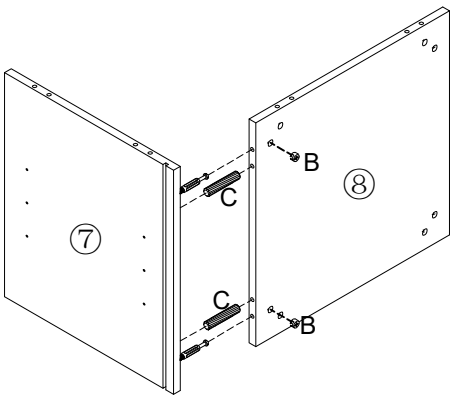
B
4PCS
C
8*40
4PCS
7
8
B
C
C
B

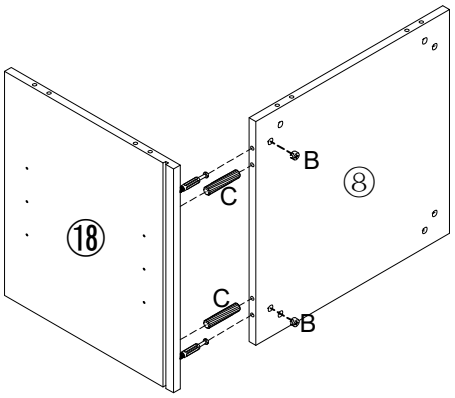
18
8
B
C
C
B

STEP 4

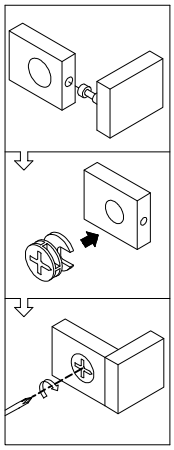

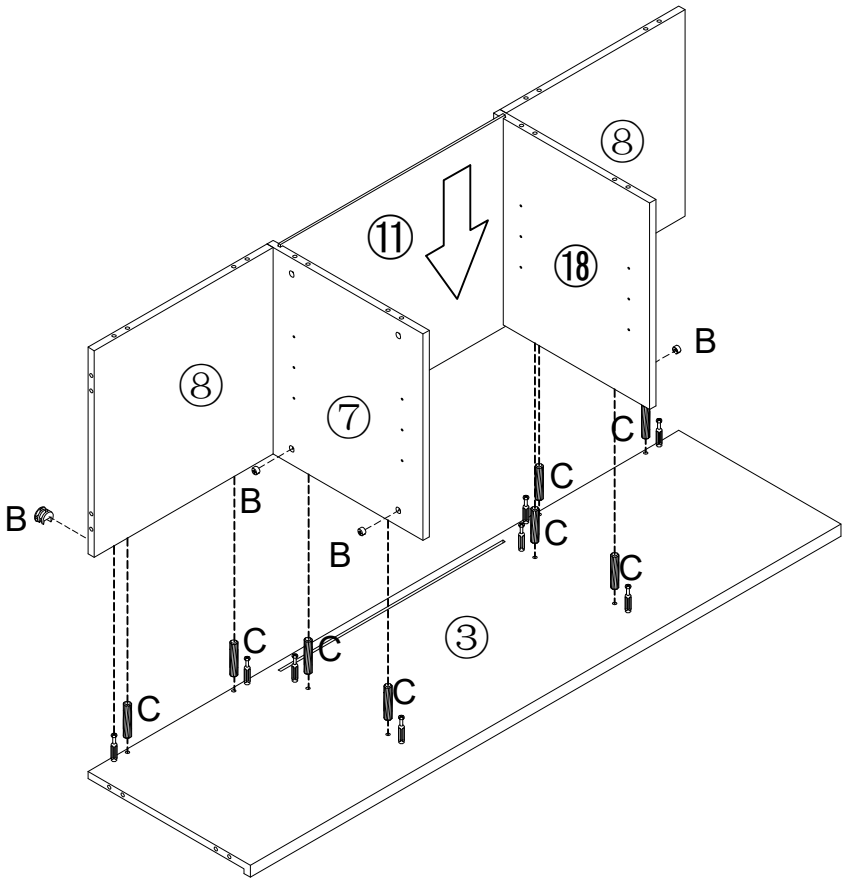

B
8PCS
C
8*40
8PCS

STEP 5

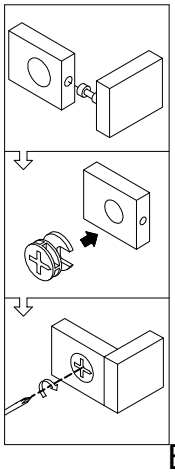

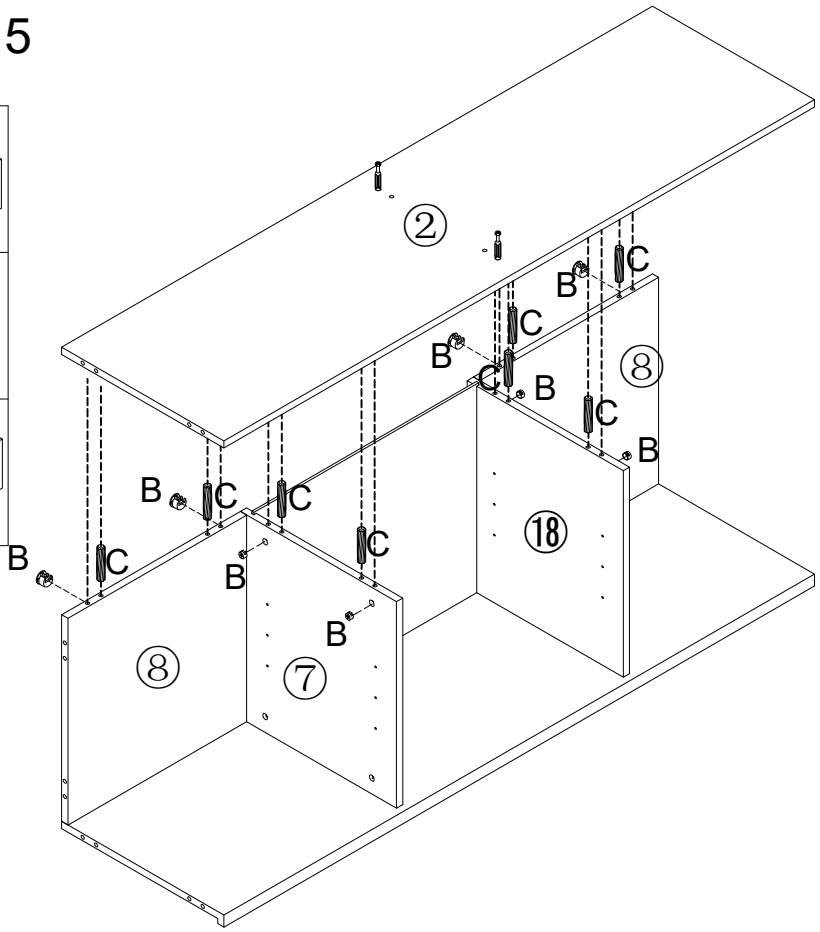

B
8PCS
C
8*40
8PCS

STEP 6

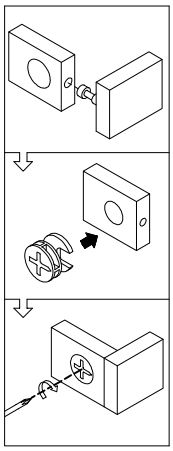

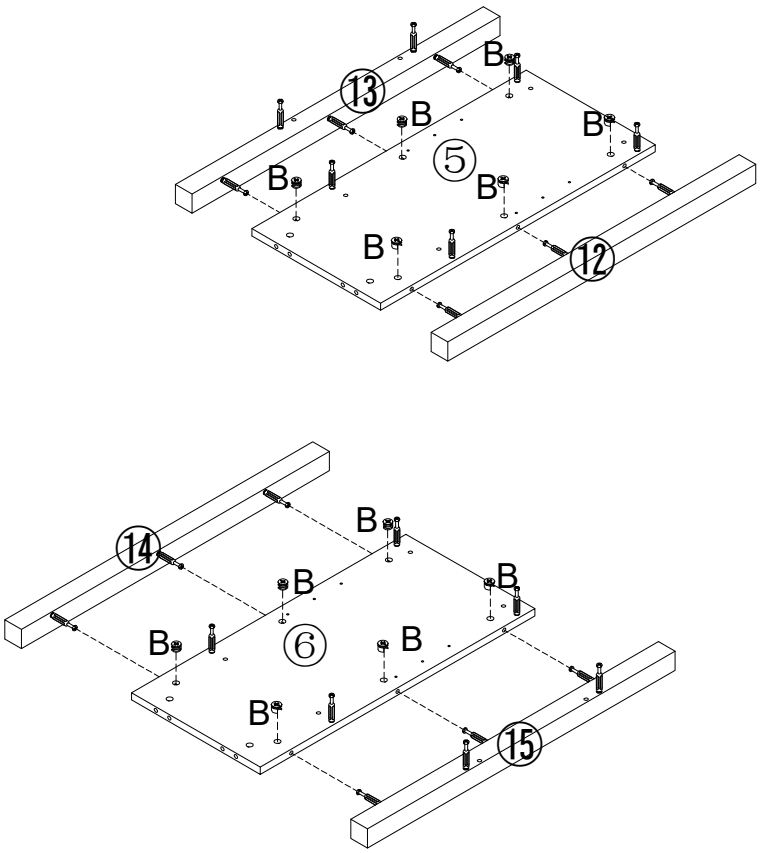

B
12PCS

STEP 7

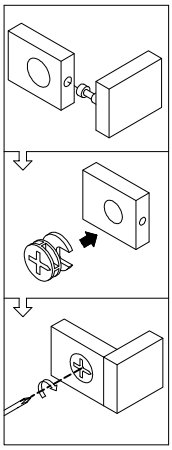

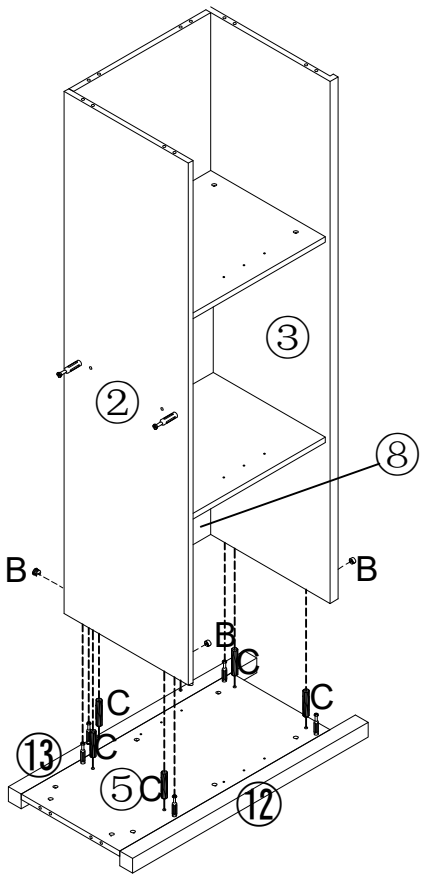

B
6PCS

C
8*40
6PCS

STEP 8

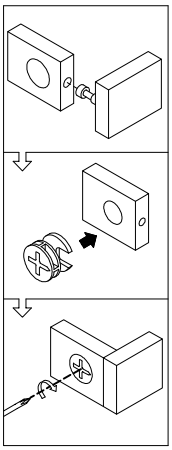

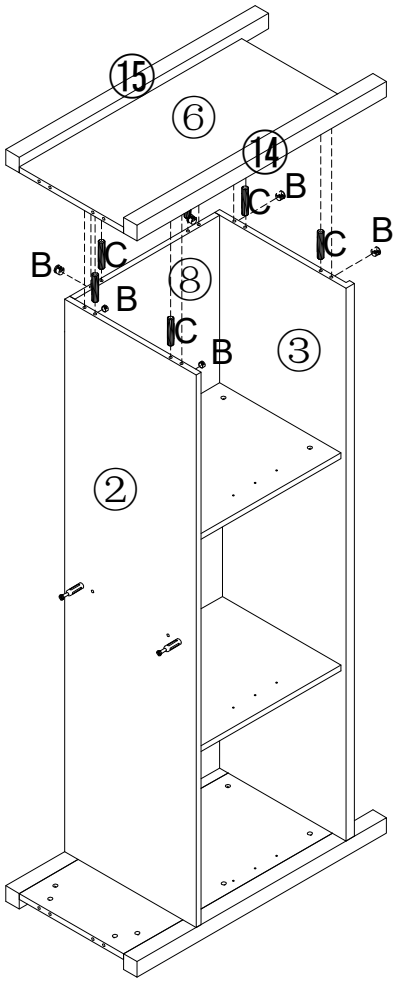

B
6PCS

C
8*40
6PCS

STEP 9

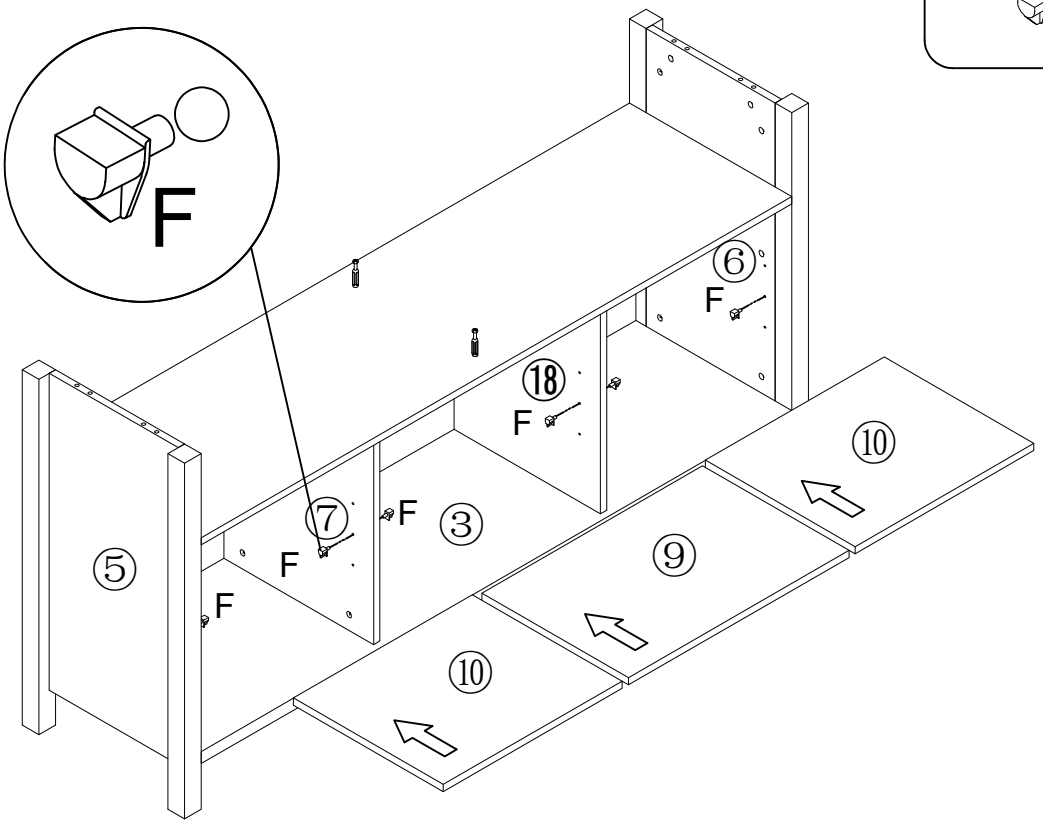

F
12PCS

STEP 10

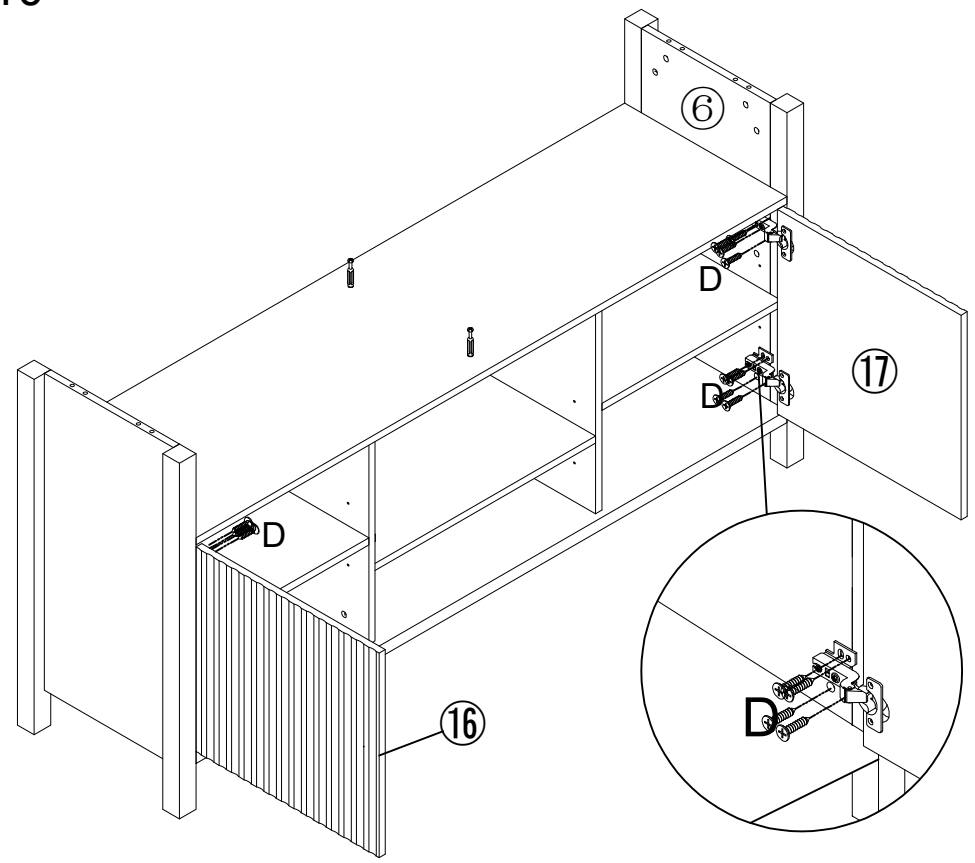

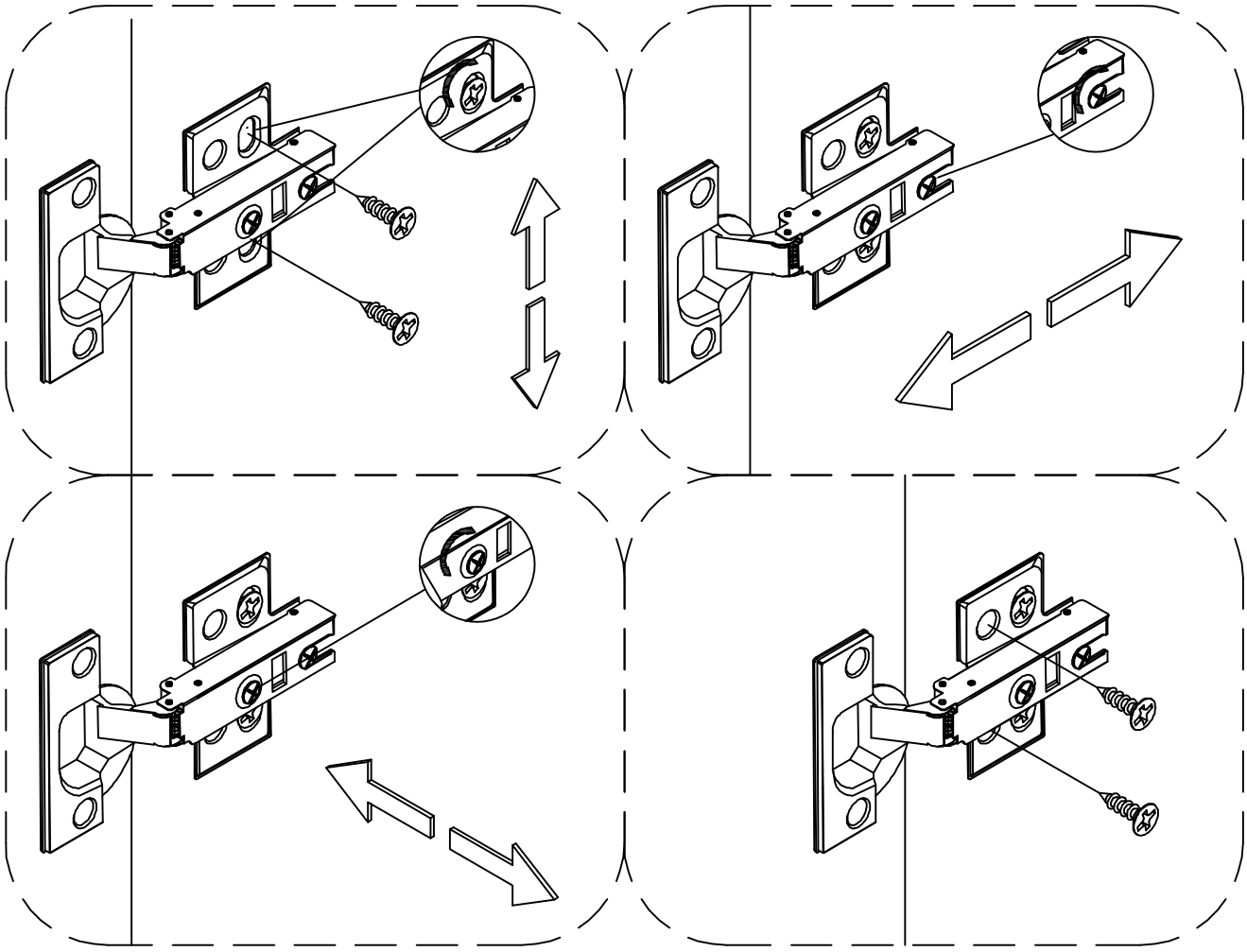

STEP 11

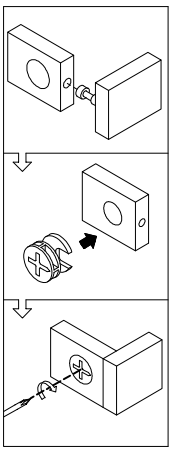

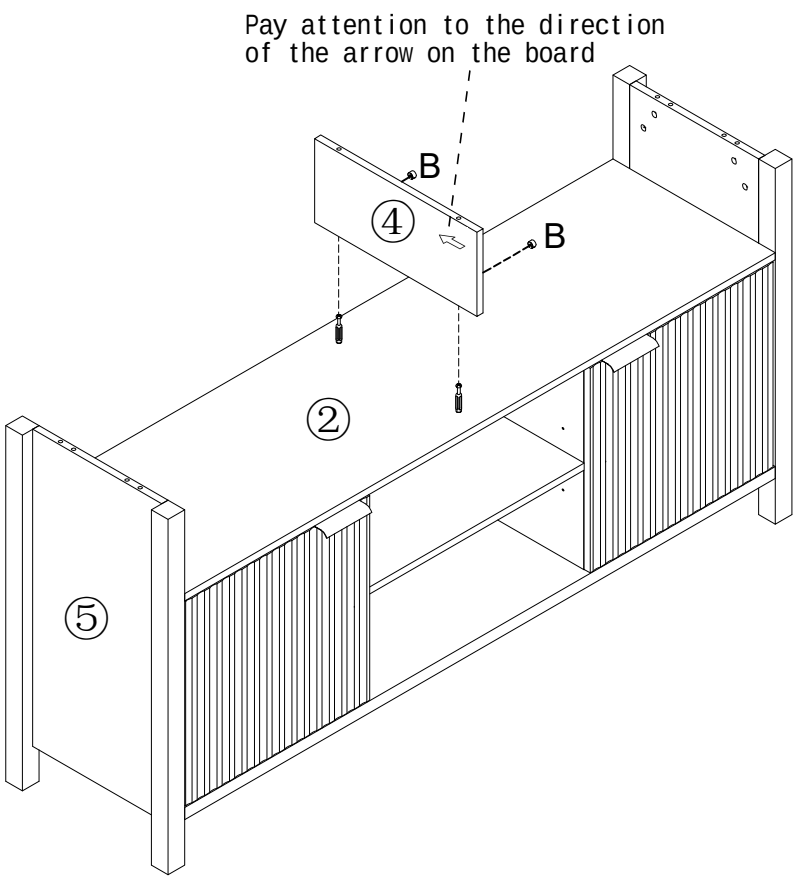

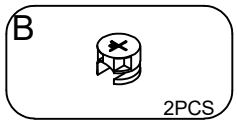

STEP 12

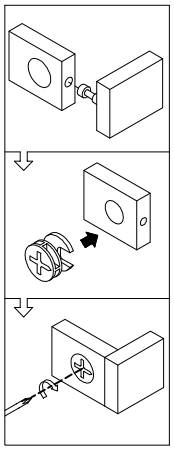

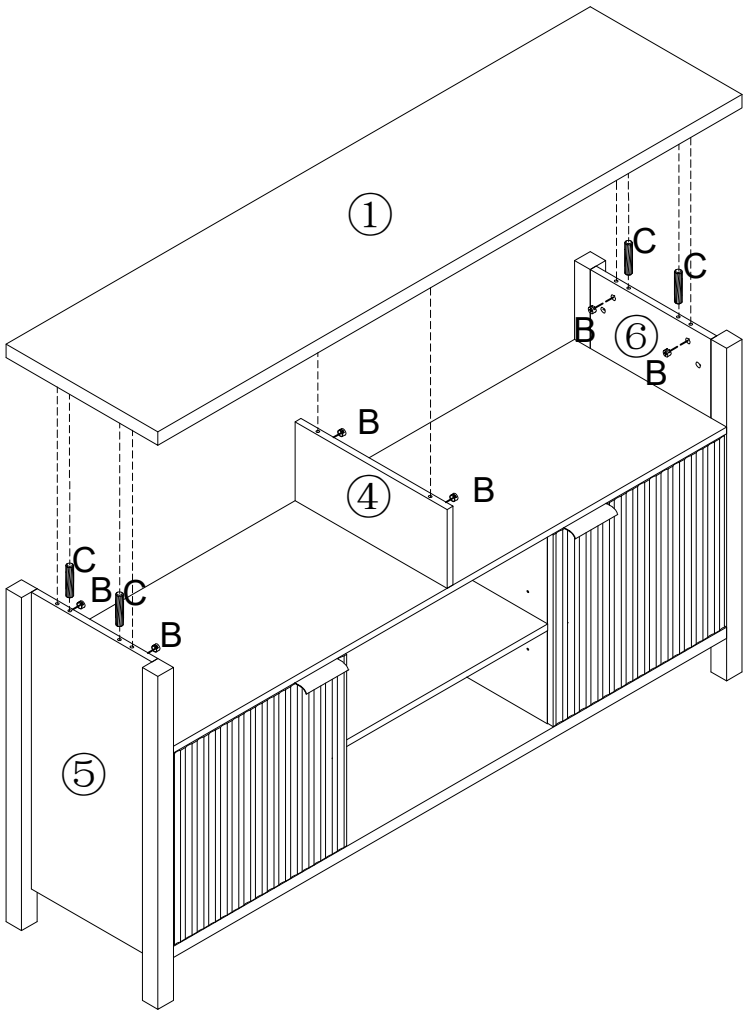

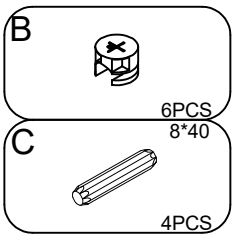

STEP 13

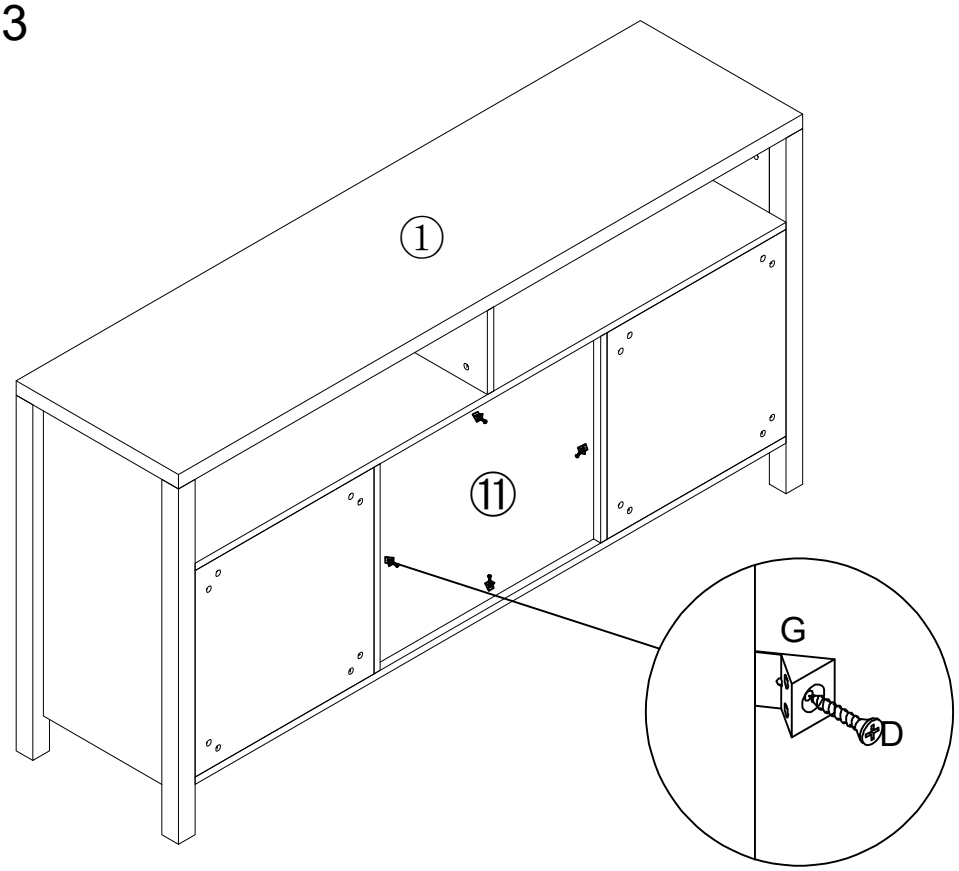

D 3.5*14 4PCS

G 4PCS

STEP 14

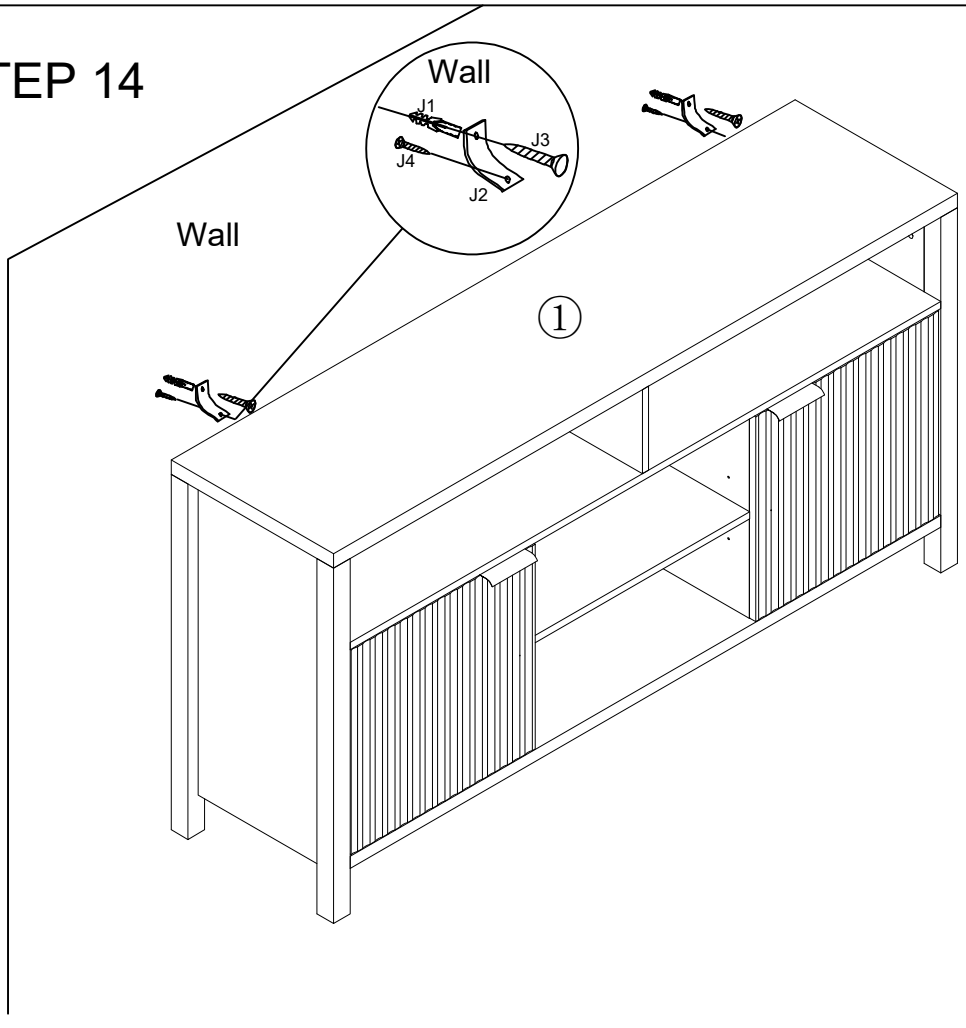

J
J1 J2 J3 J4
2SET

Trouble shooting:

