Dimensions

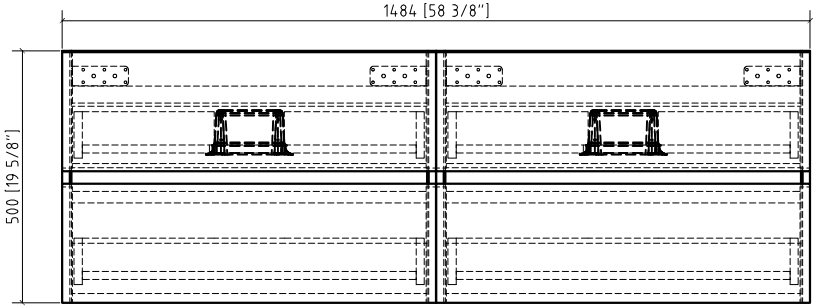
1484 [58 3/8"]
500 [19 5/8"]

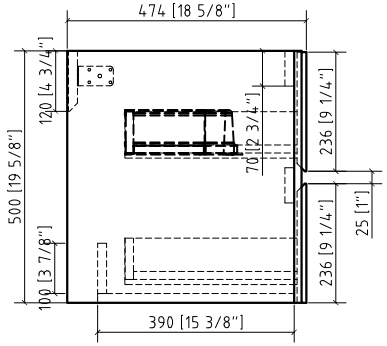
474 [18 5/8"]
120 [4 3/4"]
70 [2 3/4"]
236 [9 1/4"]
25 [1"]
236 [9 1/4"]
500 [19 5/8"]
100 [3 7/8"]
390 [15 3/8"]

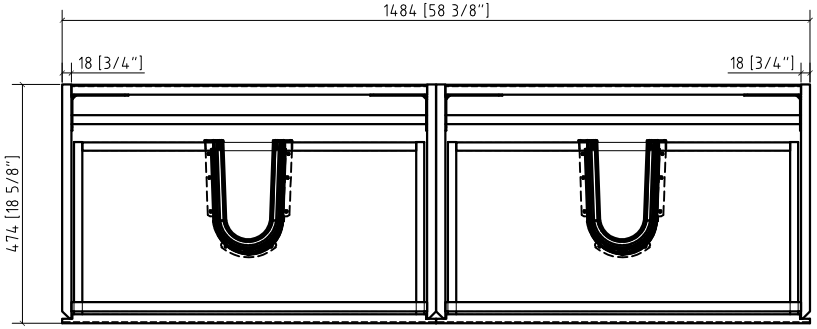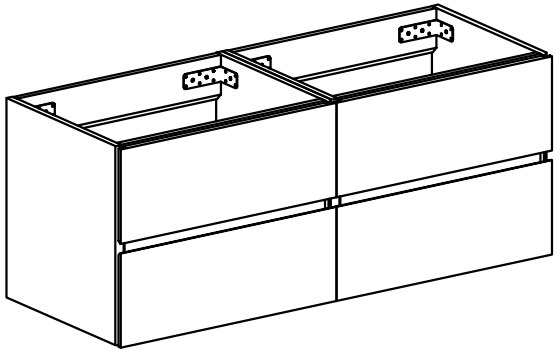
1484 [58 3/8"]
18 [3/4"]
18 [3/4"]
474 [18 5/8"]