MIRADOR

INSTRUCTION MANUAL

SANIBEL 3-PIECE CUSHIONED SEATING SET

SIDE TABLE

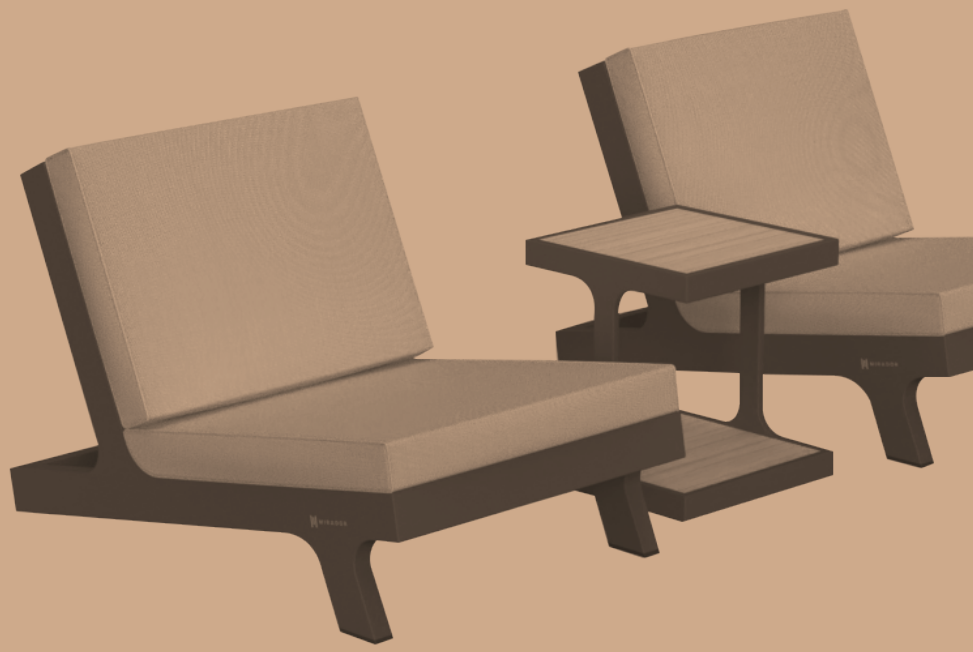

THANK YOU FOR PURCHASING OUR MIRADOR SANIBEL CUSHIONED SEATING SET!

This manual will provide you with clear and detailed instructions on how to safely and correctly assemble and maintain your sanibel cushioned seating set, to ensure it brings you many years of use and enjoyment.

IMPORTANT
Please read the entire manual carefully before assembling and using your sanibel cushioned seating set, and please ensure the manual is kept in a safe place for future reference.

Any use or modification to the sanibel cushioned seating set not included in this manual shall be considered as improper use, which may cause considerable danger to users and property and will void the product warranty.

Please only use this product for its intended purpose within a residential environment. Failure to do so will void your warranty.

We reserve the right to make changes for product improvements.

For parts and customer service, please call +1 (877)-506-4777 in the U.S. and Canada (English and Spanish) Monday - Friday: 6:30 am - 4:30 pm, Saturday – Sunday: 8:30 am – 4:30 pm, Pacific Time. Or email: support@miradoroutdoor.com

Digital instruction manual is also available on our official website **www.miradoroutdoor.com** for your reference.

TABLE OF CONTENTS

Minimun Recommended Outdoor Space

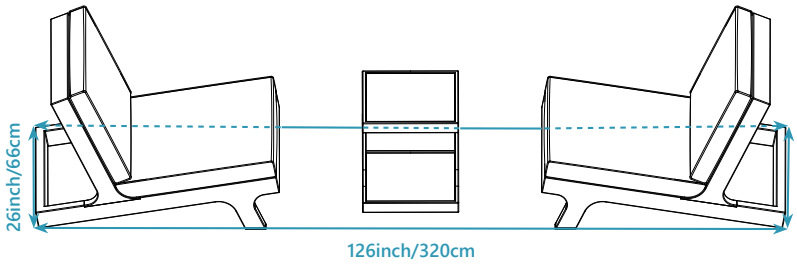

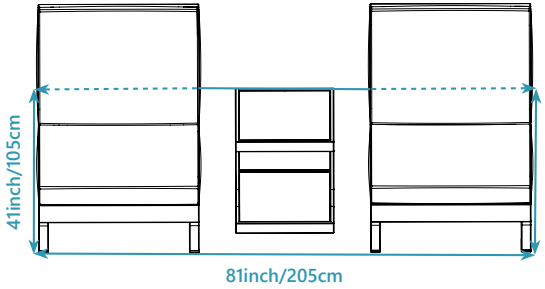

- Before Assembling Your Cushioned Seating Set 3
- Important Safety Advice 3
- List of Parts 5
- Assembly 6
- Enjoy Your Sanibel Cushioned Seating Set 8
- Care & Maintenance 9
- Warranty & Complaints Procedure 10
- Disassembly & Disposal of the Product 11

BEFORE ASSEMBLING YOUR CUSHIONED SEATING SET

WARNING: Important safety instructions. Follow all instructions, since incorrect assembly can lead to severe injury.

Check to ensure there are no missing parts:
Before you begin assembly, please check that you have all the parts required to assemble your sanibel chair. Please also carefully check that the quantity of parts match with that of the model you have purchased.

If any parts are missing, please refer **Warranty & Complaints Procedure** to contact customer service before beginning the assembly.

Prepare the parts you will need for each step:
In the **Assembly** section of the manual, each step indicates the necessary parts and quantities required to complete the step. We recommend that you prepare the parts you will need for each step. Doing this will save you time and effort during assembly. If possible, place the parts on cardboard or other soft surface to protect from scratching the painted surfaces.

IMPORTANT SAFETY ADVICE

For the safety of all persons assembling and using the sanibel cushioned seating set, it is important to follow the safety guidelines below.

Always keep the entire base of the chair in contact with the ground. If the chair is wobbly, tilted, or unstable do not continue using the chair until it is fixed or replaced.	Always wear appropriate work shoes, gloves and eye protection when working.	Work well away from power lines, particularly when handling metal parts.	If using power tools or a ladder, always follow the manufacturer's safety instructions.	If damage is visible, stop using it immediately and contact authorized personnel for repair.
	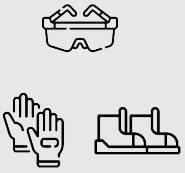	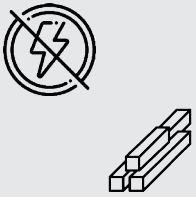		

After prolonged use, we recommend you check all the fittings are tightened securely.	Keep children, body parts and clothing away from the swivel parts to prevent them from getting caught in it.	Do not exceed the weight limit when using the sanibel cushioned seating set. (chair: 352lbs/160kg, table: 33lbs/15kg)	Please recycle packaging where possible.	Only use replacement parts that are approved by the manufacturer.
	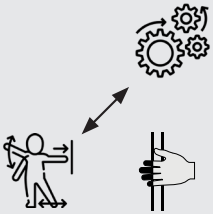			✓ Approved

Do not stand on the sanibel chair, nor adopt unsafe sitting positions on it.	Do not drag the product while cleaning or moving to avoid scratches.	Dispose of all plastic bags safely. Keep them out of the reach of children.	Do not attempt to assemble the product if you are tired, or after consuming alcohol.	Keep children and pets away from the assembly area until the work is completed.

Do not attempt to assemble the sanibel cushioned seating set in windy or wet conditions.	Do not stand on the sanibel cushioned seating set.	Do not place the sanibel cushioned seating set in environments with flammable or caustic chemicals.	Changes to the design or configuration of equipment may not be made without consulting the manufacturer or authorized representative.

LIST OF PARTS

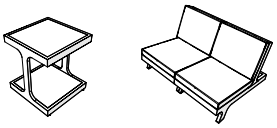

	REF	PART NAME	QTY (PER BOX)
A		Seat frame	2
B		Backrest frame	2
C	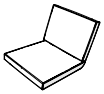	Cushion	2
D		Spring washer Φ8	8+2
E		Flat washer Φ8	8+2
F		Screw M8x82	8+2
G		Connecting knob M6x22	4
H		Connecting metal plate	1
M		Hex wrench	1
R		Side table	1

ASSEMBLY

A

Use a hex wrench **M** to secure seat frame **A** and backrest frame **B** together with spring washers **D**, flat washers **E**, and screws **F**.

F x 4

M x 1

D x 4

E x 4

A x 1

B x 1

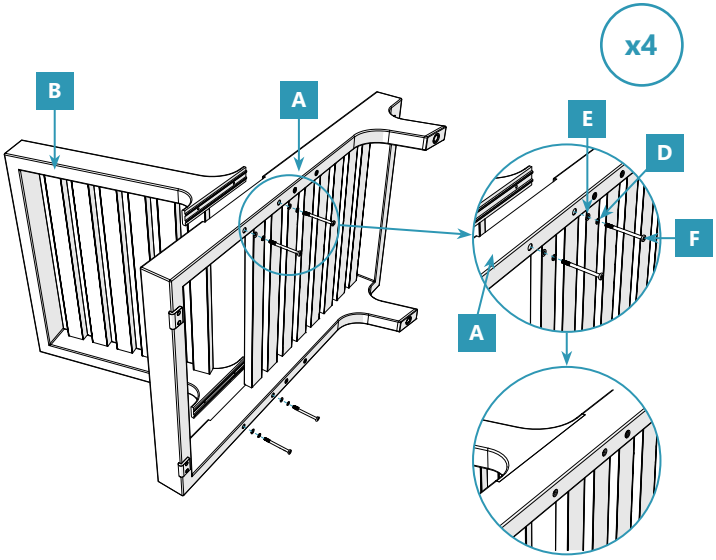

B

Optional:
Skip this step if there is no plan to layout the set with seats connected.

Connect the 2 chairs with a connecting metal plate **H** and 4 connecting knobs **G**, tighten the connecting knobs **G** clockwise.

G x 4

H x 1

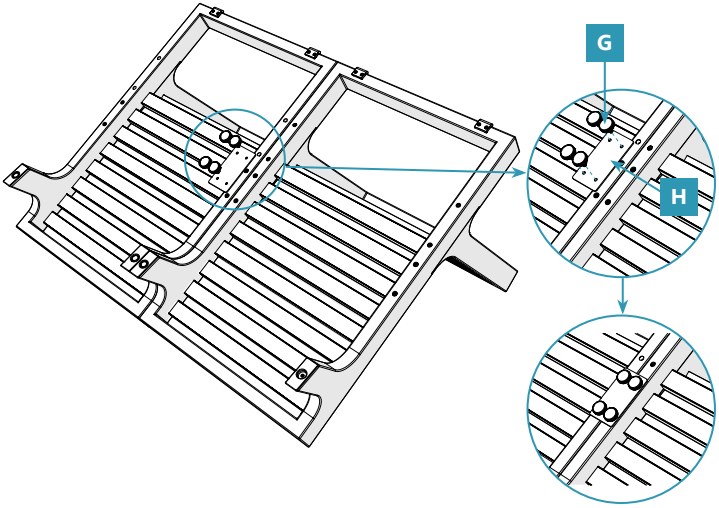

C

Place the cushion **C** on the chair and attach velcro to the frame.

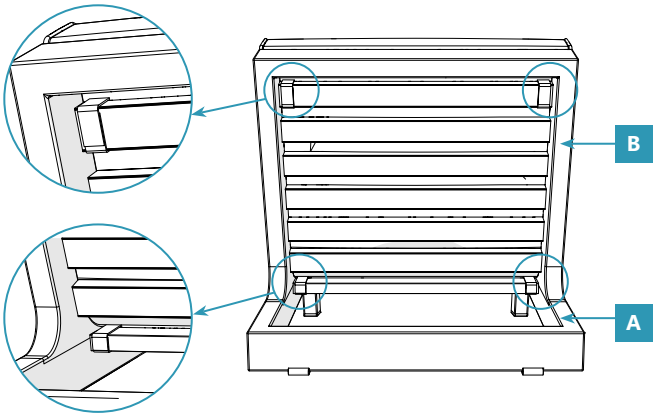

C x 1

D

Repeat steps **A** - **C** to assemble the rest sanibel chair.

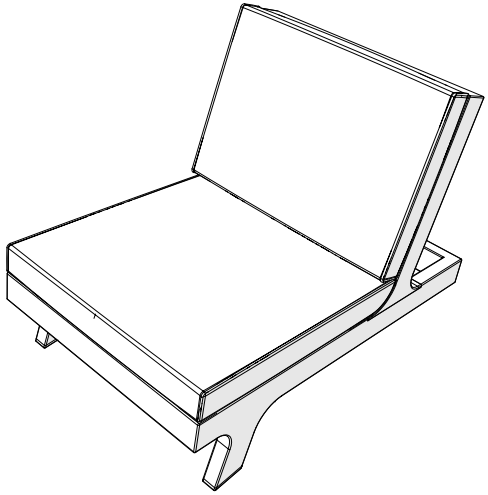

ENJOY YOUR SANIBEL CUSHIONED SEATING SET!

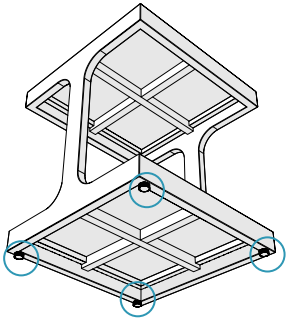

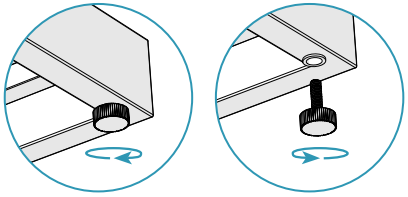

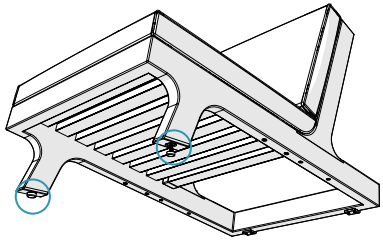

Height adjustment:

Adjust the height of the furniture by finding the leveling feet screws at the bottom of the sanibel chair & table.
Turn the screw clockwise to lower the chair/table.
Turn the screw counter clockwise to raise the chair/table.

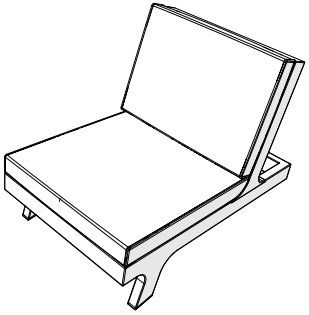

Single seat

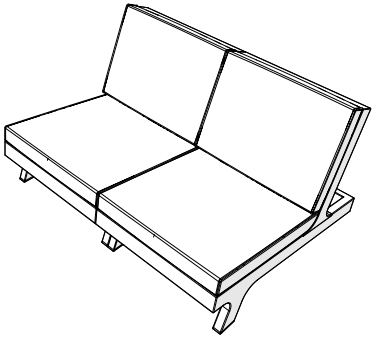

2 seats

DIY:

Select the sanibel chair combinations according to your needs.

Enjoy your Mirador Sanibel 3-Piece Cushioned Seating Set!

CARE & MAINTENANCE

FRAME

- Dust and dirt will collect on the frame and will require periodic cleaning.
- Use water or mild soap to clean.
- Be sure to drain any water accumulated inside the frames. Air dry or wipe with a soft clean cloth.

CUSHION

- When the cushion becomes water-saturated, unzip the cushion cover to allow for ventilation and facilitate the drying process. Place the cushions upright with the zipper facing down to drain excess moisture more quickly.
- Store cushions indoors during inclement weather and rainy seasons.

SUNBRELLA CUSHION FABRIC

- Dust and dirt will collect on the sunbrella fabric and will require periodic cleaning.
- Store it in a dry area and out of the elements when not in use or cover with commercially available outdoor furniture covers.
- Blot (don't rub) liquid spills with a clean, dry cloth.
- Brush off dirt before it becomes embedded in the fabrics and wipe up spills or clean soon after a spill occurs. The quicker you clean spills, the easier they can be to remove.
- Use water or mild soap to clean.
- Not machine washable.
- Solutions for fabric wrinkling.
  1. Use an iron on the synthetic setting. Avoid using steamers or the steam setting.
  2. Test a small, hidden area before ironing the whole piece due to varying iron temperatures.

Cleaning methods for different stains

- Oil-based spills.
  1. Apply an absorbent such as corn starch, then remove with a straight edge.
  2. Spray on a mild cleaning solution of soap and water.
  3. Rinse the fabric thoroughly to remove all soap residue.
  4. Air dry.
- Mildew.
  1. Prepare a solution of 1 cup of bleach and 1/4 cup mild soap per gallon of water.
  2. Spray on entire area and allow to soak into the fabric for 15 minutes.
  3. Clean entire surface area with a sponge, clean towel or very soft bristle brush.
  4. Rinse thoroughly to remove all soap residue.
  5. Air dry.

WARRANTY & COMPLAINTS PROCEDURE

For terms and conditions of our limited warranty, please visit www.miradoroutdoor.com or contact your local Mirador sales representative.

Complaints procedure:

- The complaint must include an order number or transaction number. Goods without an order number or transaction number are not covered under the warranty.
- The complaint must include a detailed description of the defect, the name of the company which assembled the product if 3rd party was used and the date when the defect was discovered.
- At Sorara Outdoor Living USA Inc's discretion, customer must offer supplier the photos/videos of the issue/damaged parts. Otherwise, supplier reserves the right to refuse replacement parts or credit.
- Please save a copy of your purchase receipt.

Contact:
Customer Service: support@miradoroutdoor.com
Need Assistance? Call +1 (877)-506-4777

Hours of Operation:
Phone Support: Monday - Friday: 6:30 am - 4:30 pm, Saturday – Sunday: 8:30 am – 4:30 pm, PST.
Email Support: We are available 24 hours a day. Please allow up to 24 hours for a response.
Chat With Us Online: miradoroutdoor.com, Monday - Friday: 5:30 am - 2:00 pm, Saturday – Sunday: 8:30 am – 4:30 pm, PST.

Note: Our team is available to assist you during these hours. If you have any inquiries or require support outside of these hours, please leave a voicemail, send an email, or use our online contact form. We will get back to you promptly during the next available support hours. Thank you for choosing Mirador Outdoor!

DISASSEMBLY & DISPOSAL OF THE PRODUCT

Incorrect disassembly of the sanibel cushioned seating set may lead to serious injury and product damage.

Disassembly should be assigned to qualified personnel with adequate training within the scope of occupational health and safety and knowledge within the scope of recycling.

When the service life of the Mirador Sanibel 3-Piece Cushioned Seating Set is over, it is necessary to disassemble it for disposal and to sort the individual materials and components in compliance with the local regulations of your state, city and county.

more to
enjoy

FOLLOW US ON
WWW.MIRADOROUTDOOR.COM

@miradoroutdoor @MiradorOutdoor
@miradoroutdoor @miradoroutdoor

Printed on 100%
post-consumer
recycled paper

FR