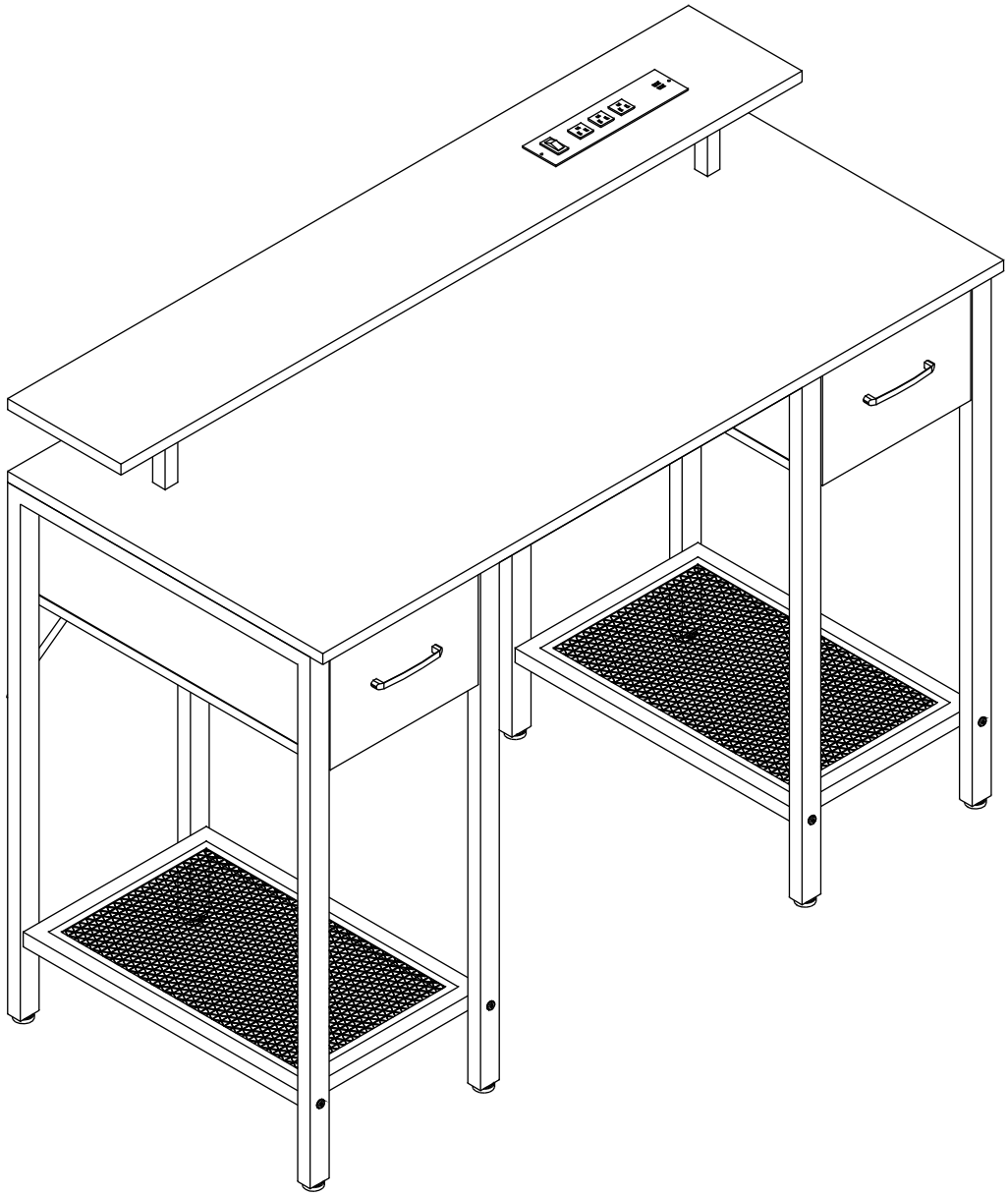

Made in China

For a Hassle-Free Installation

1.Ensure you have received all cartons and familiarize yourself with the workload. Make sure there are enough helping hands to assist you, and that you have allocated the time required to assemble your new product.

2. Make sure you have cleared enough space in your home for the assembly. We recommend protecting your floor with a mat or cardboard to avoid scratches during the assembly process.

3. Read instructions carefully and check no parts are missing.

4. Lay out all hardware on a soft surface so you can easily identify them.

5. Carefully identify all components according to the labeled alphabet to ensure that the parts are in the correct place.

6. Install your new product carefully following the instructions. Don’t skip ahead!

* If any parts are missing or damaged, we will gladly ship you replacement parts free of charge. Please contact us order ID and the Store Name of your purchase, we're always here to help :)

WARNING

Serious or fatal injury may occur from unexpected assembly or use.

1.During the assembly process, keep all parts away from babies or children.

2.Always securely fix this product to the wall. Make sure the wall area to be drilled is free from hidden electrical wires, water and gas pipes.

3.Use of tip-over restraints may only reduce, but not eliminate the risk of tip-over.

4.Unless specially designed to accommodate, do not set heavy objects on top of this product.

5.Place the heaviest items on the lowest shelf.

6.Never allow children to climb or bang on drawers, doors or shelves.

Parts List

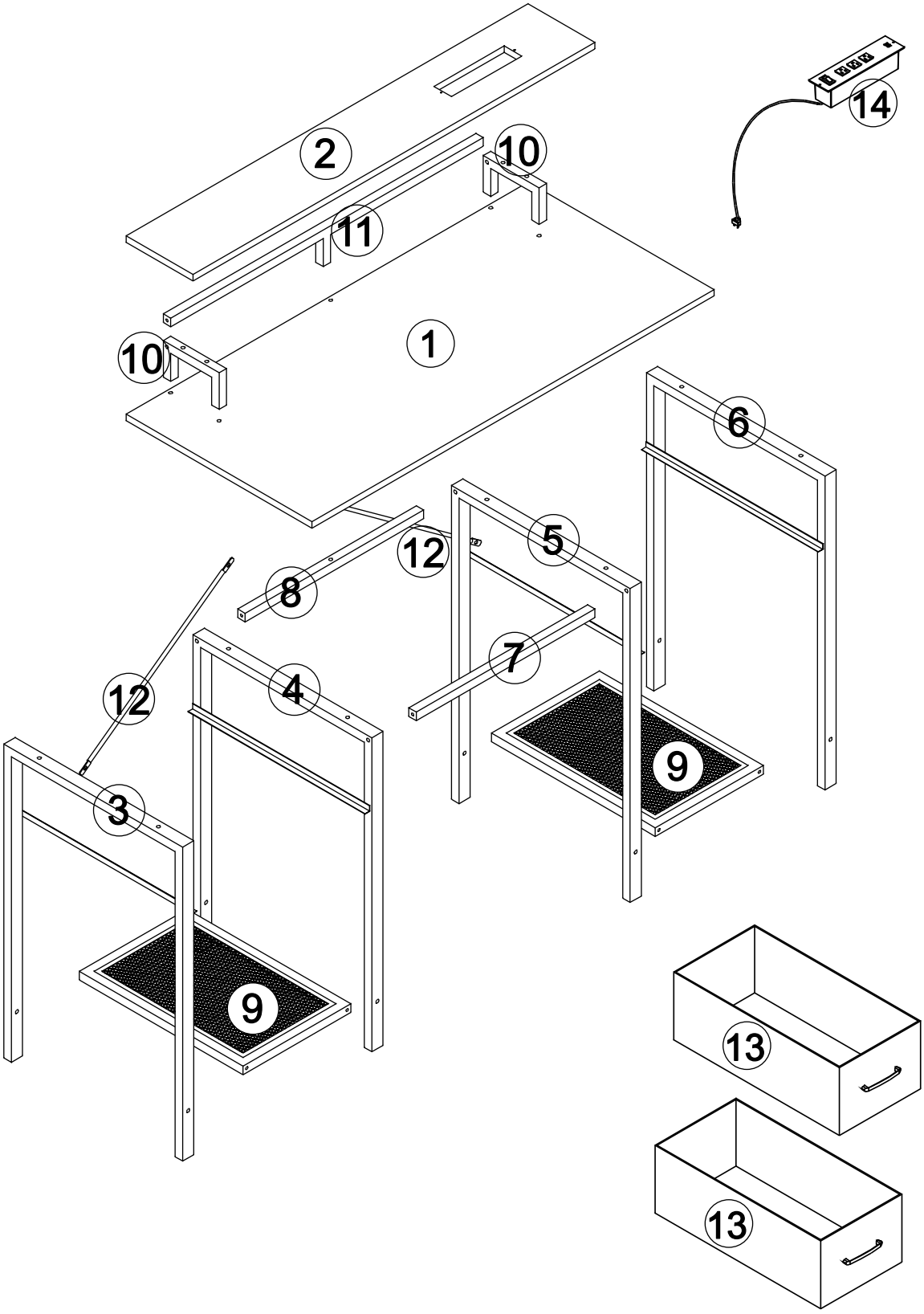

Parts List

1 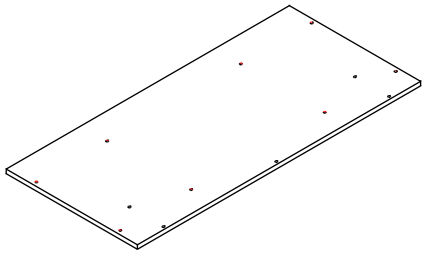 1080*500*15㎜ 1 PC	2 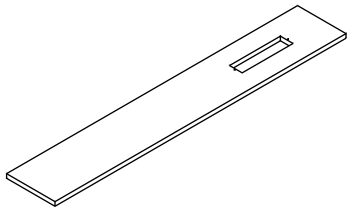 1080*180*15㎜ 1 PC
3 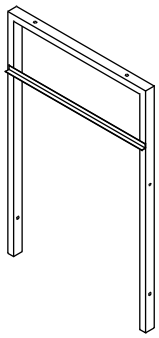 730*480*30mm 1 PC	4 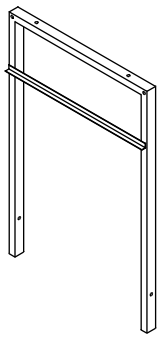 730*480*30mm 1 PC
5 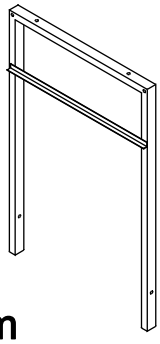 730*480*30mm 1 PC	6 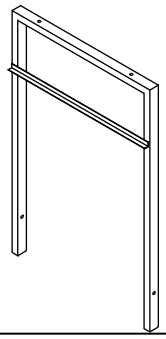 730*480*30mm 1 PC
7 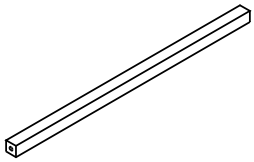 480*20*20mm 1 PC	8 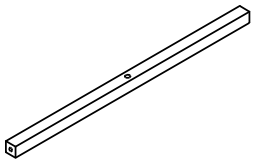 480*20*20mm 1 PC
9 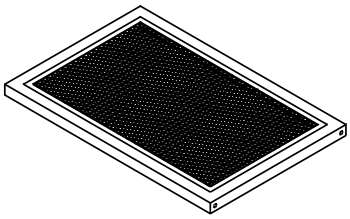 440*290*20㎜ 2 PCS	10 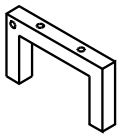 150*85*20㎜ 2 PCS

Parts List

11 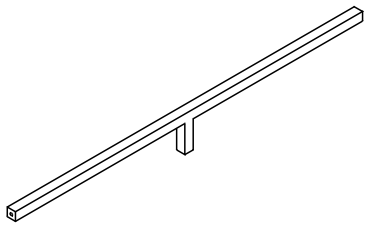 840*85*20mm 1 PC	12 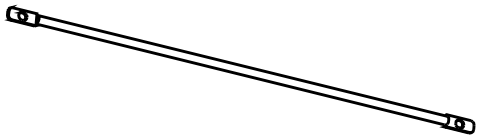 φ8*490mm 2 PCS
13 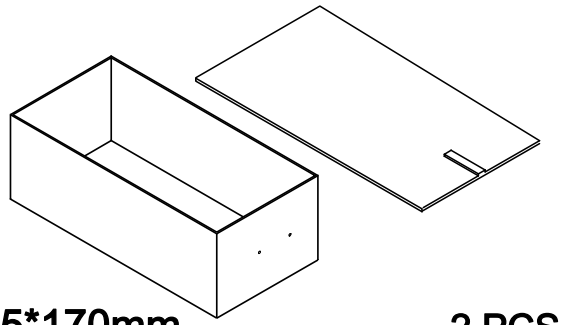 480*235*170mm 2 PCS	14 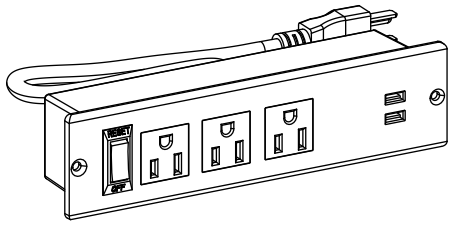 1500*53*46.5mm 1 PC

Hardware List

A 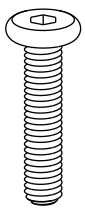 M6*40mm 4PCS	B 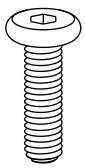 M6*30mm 25PCS	C 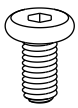 M6*12mm 4PCS
D 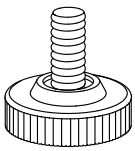 φ30*12*M6mm 8PCS	E 4mm 1PC	F 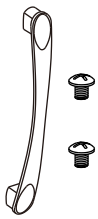 120*10*15mm 2PCS
G ST3*12mm 2PCS		

Assembly Steps

STEP 1

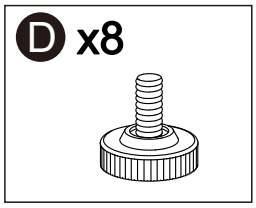

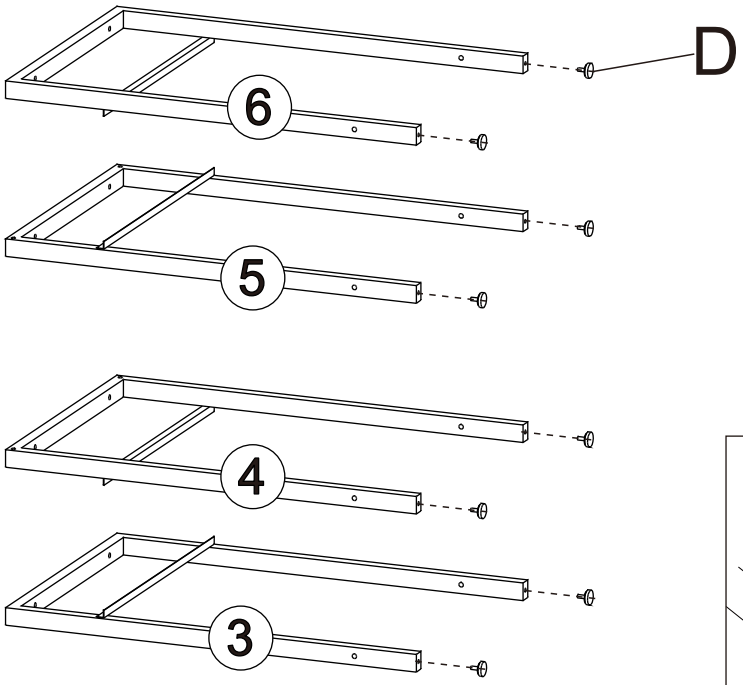

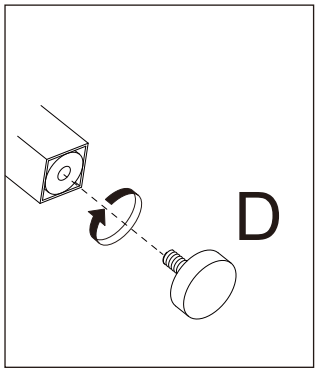

STEP 2

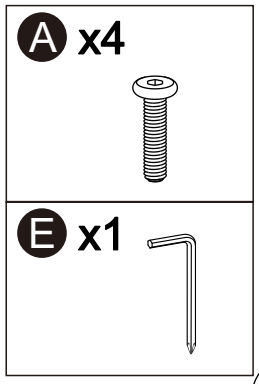

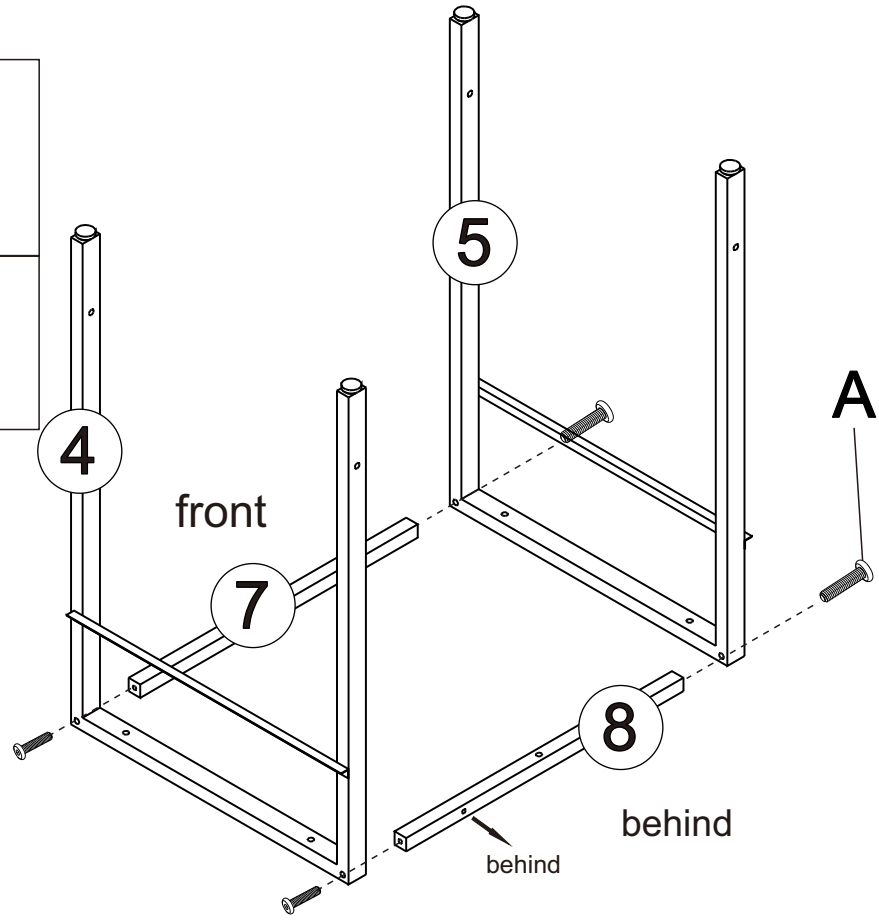

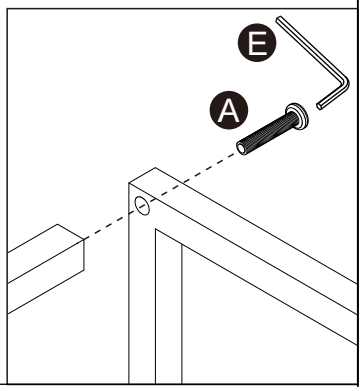

Assembly Steps

STEP 3

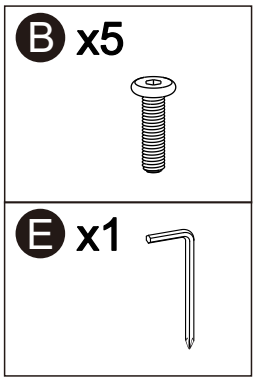

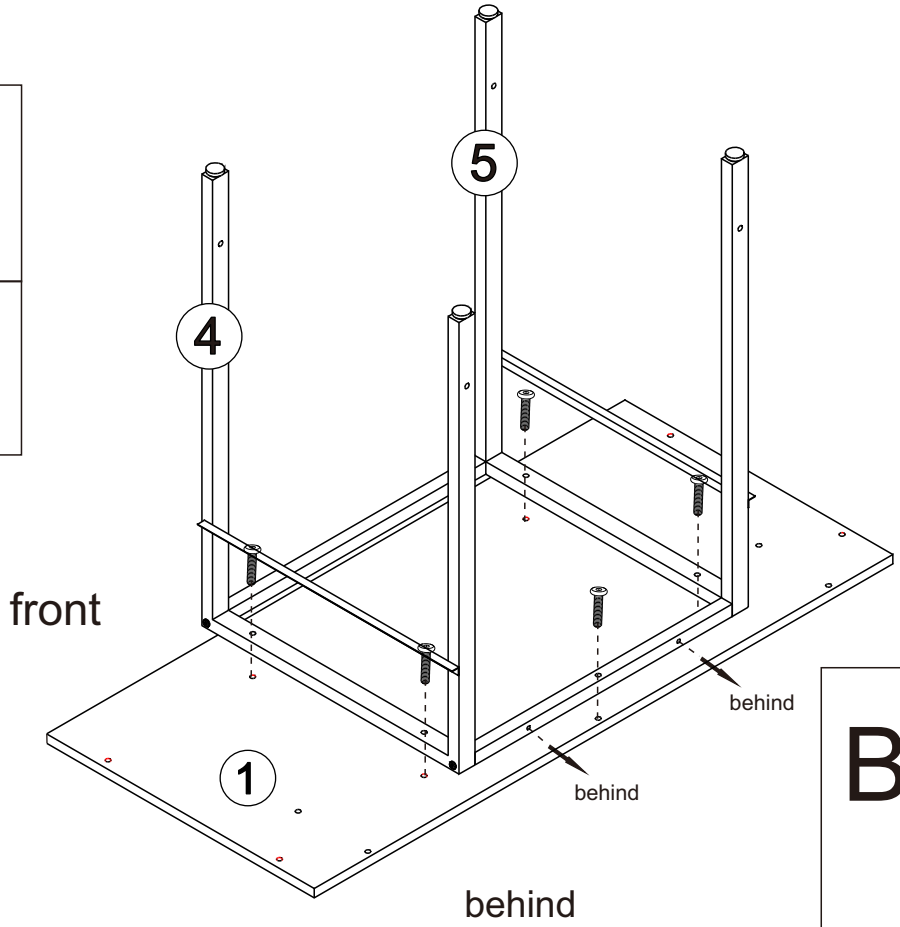

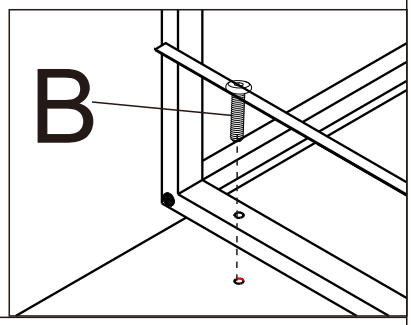

STEP 4

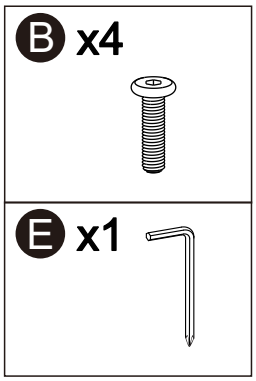

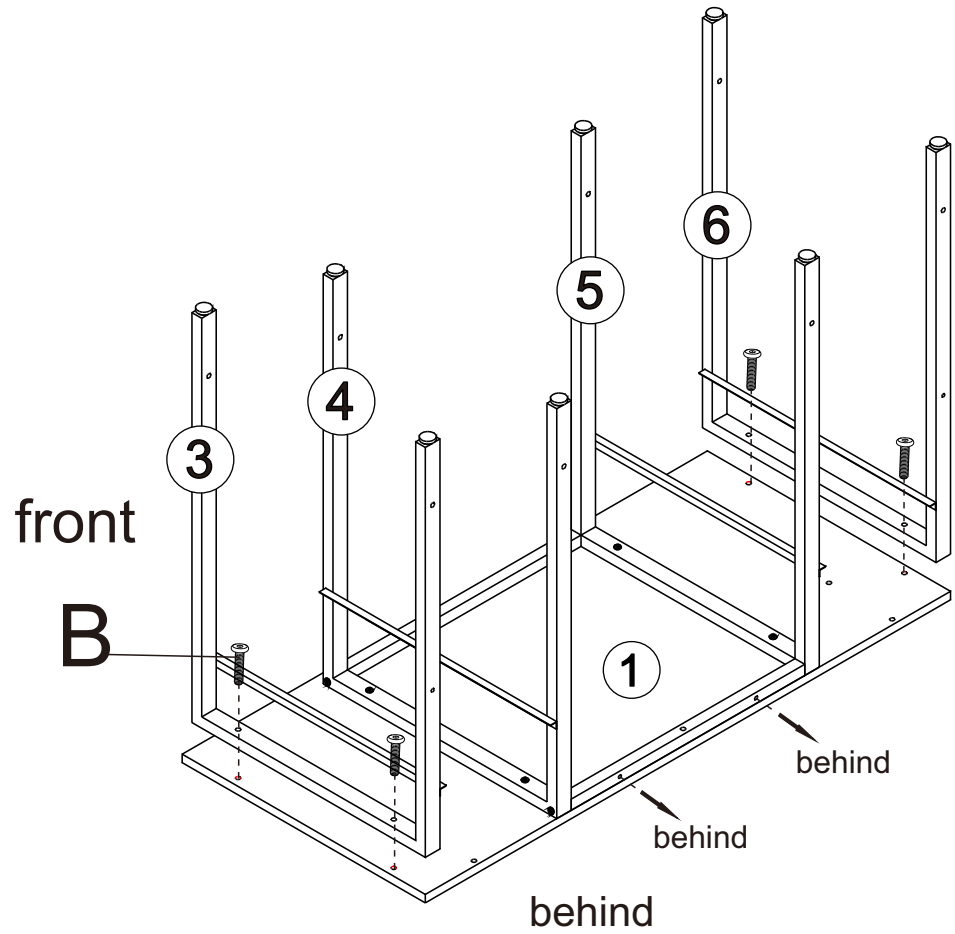

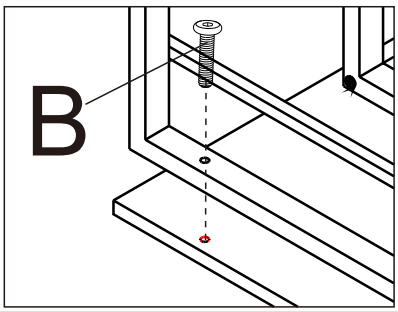

Assembly Steps

STEP 5

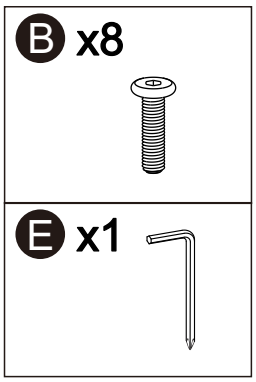

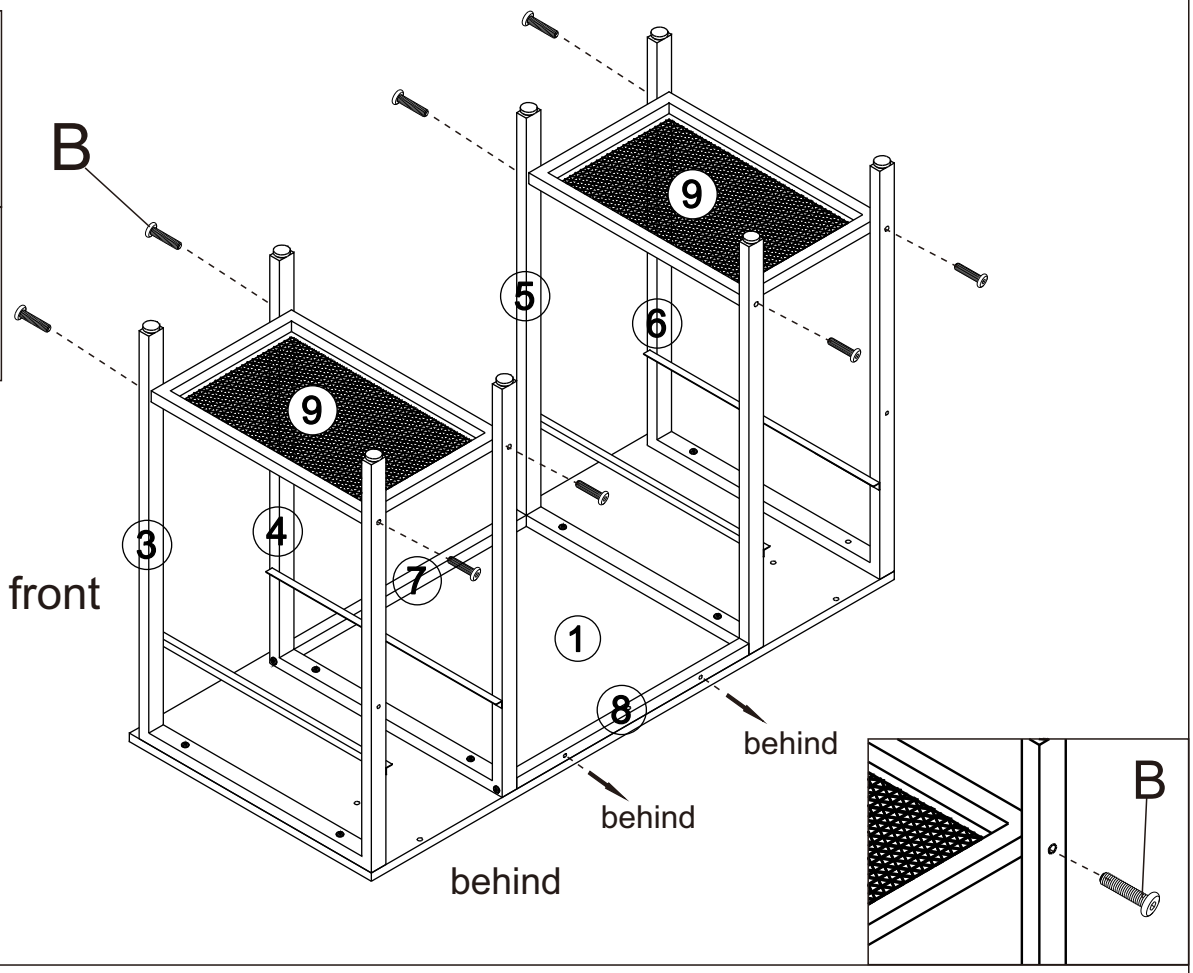

STEP 6

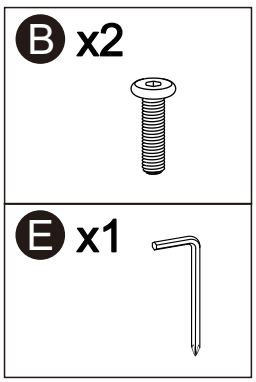

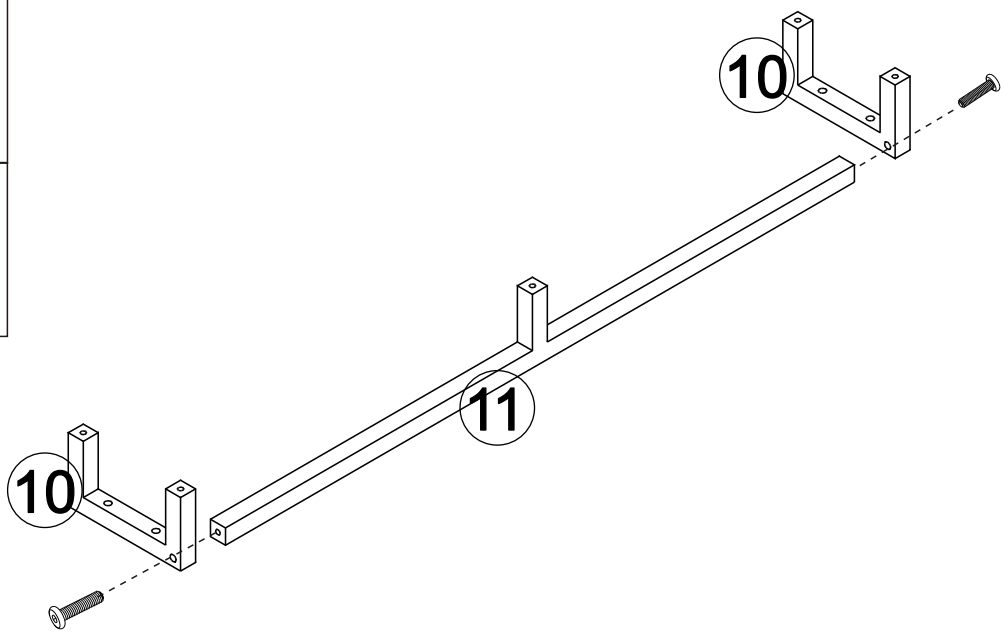

Assembly Steps

STEP 7

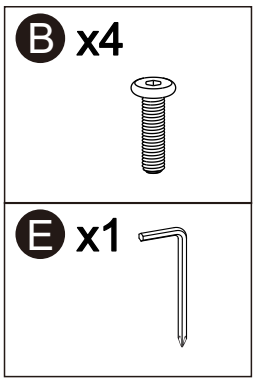

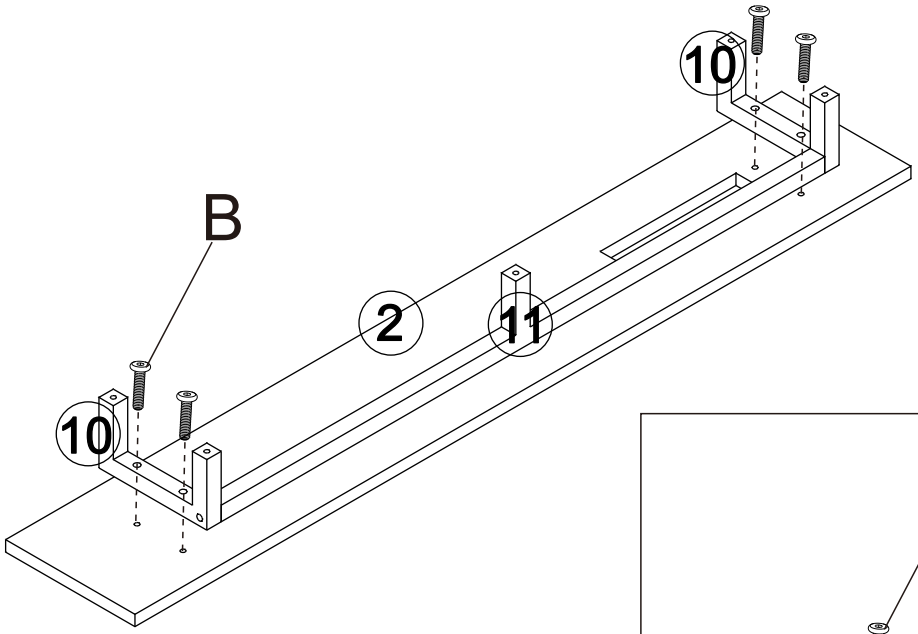

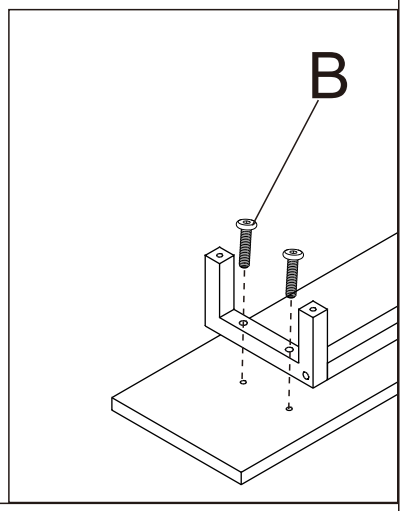

STEP 8

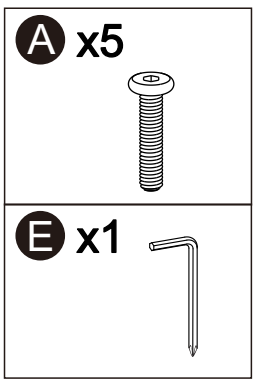

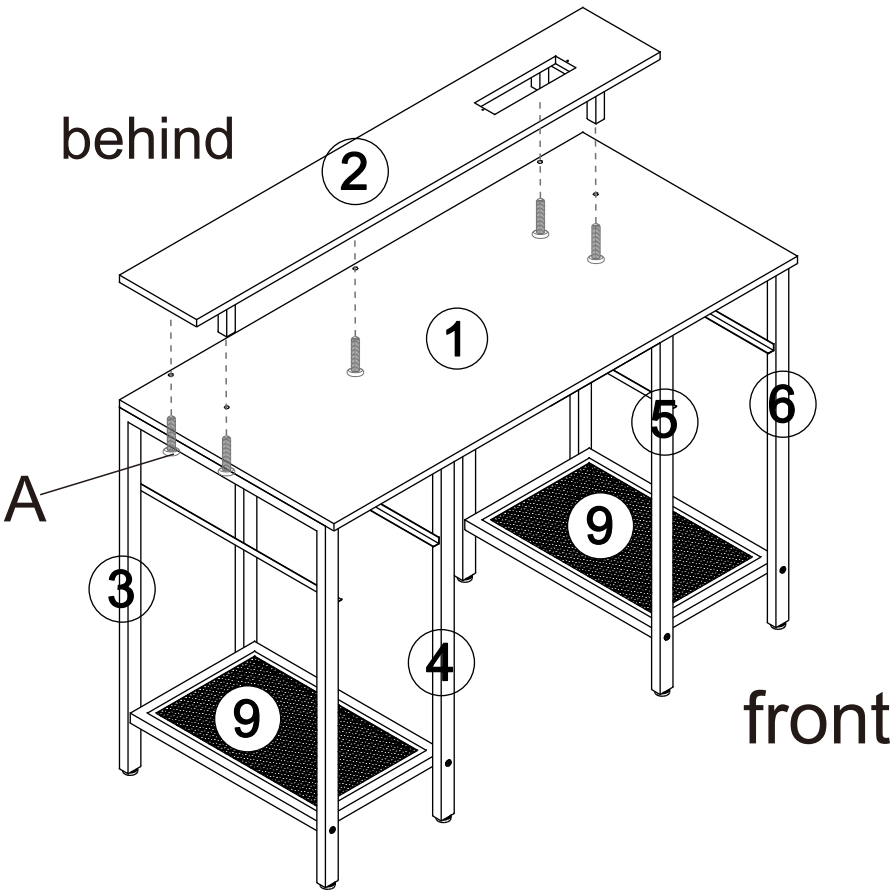

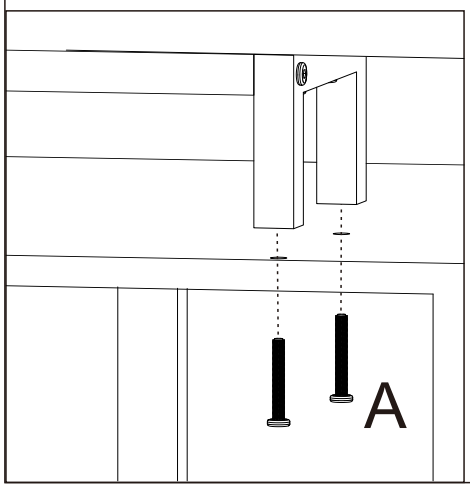

Assembly Steps

STEP 9

Ⓒ x4

Ⓔ x1

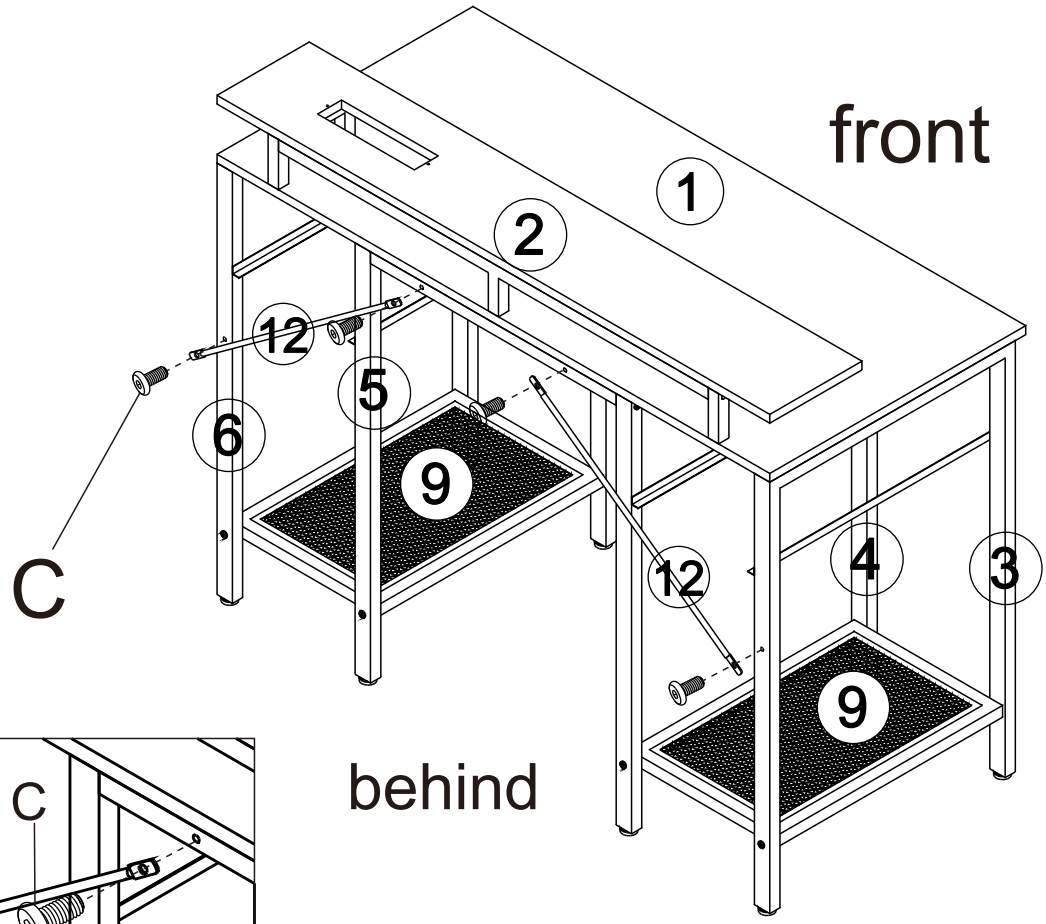

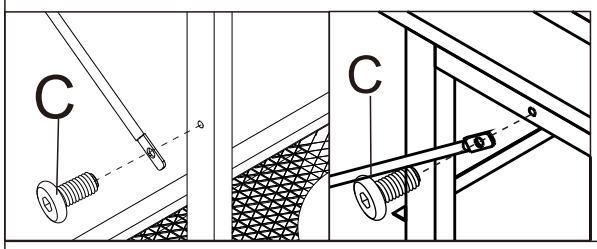

STEP 10

Ⓖ x2

Ⓔ x1

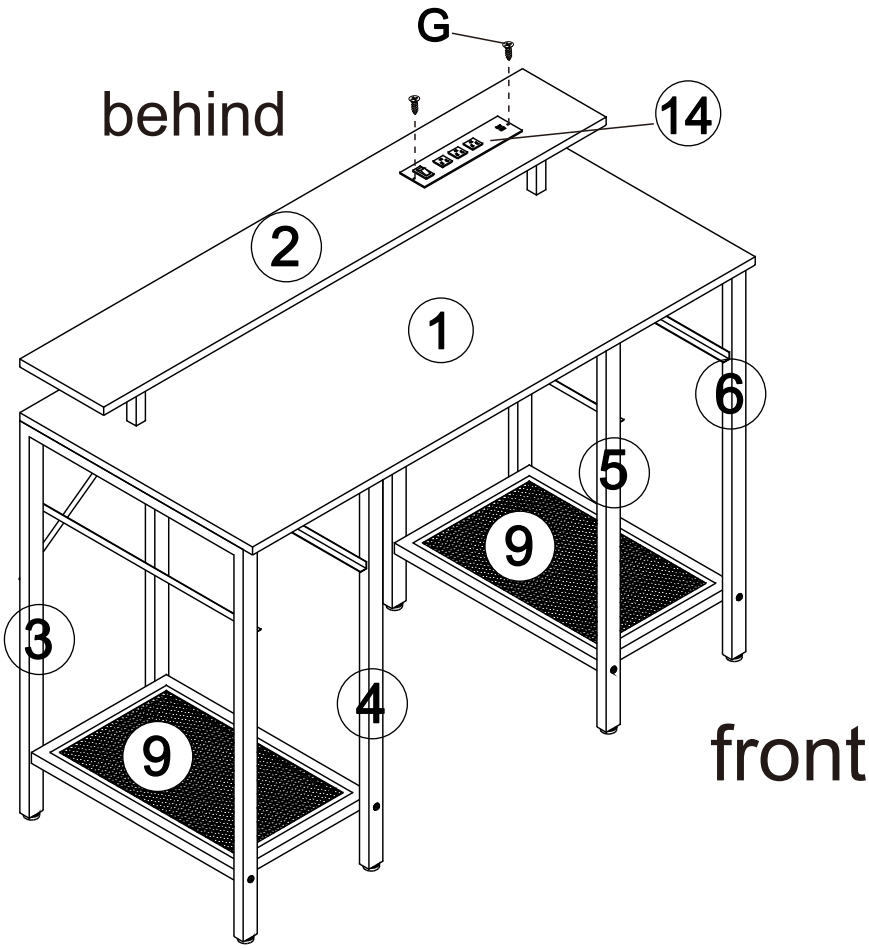

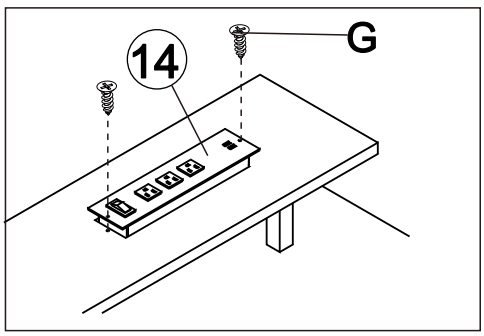

Assembly Steps

STEP 11

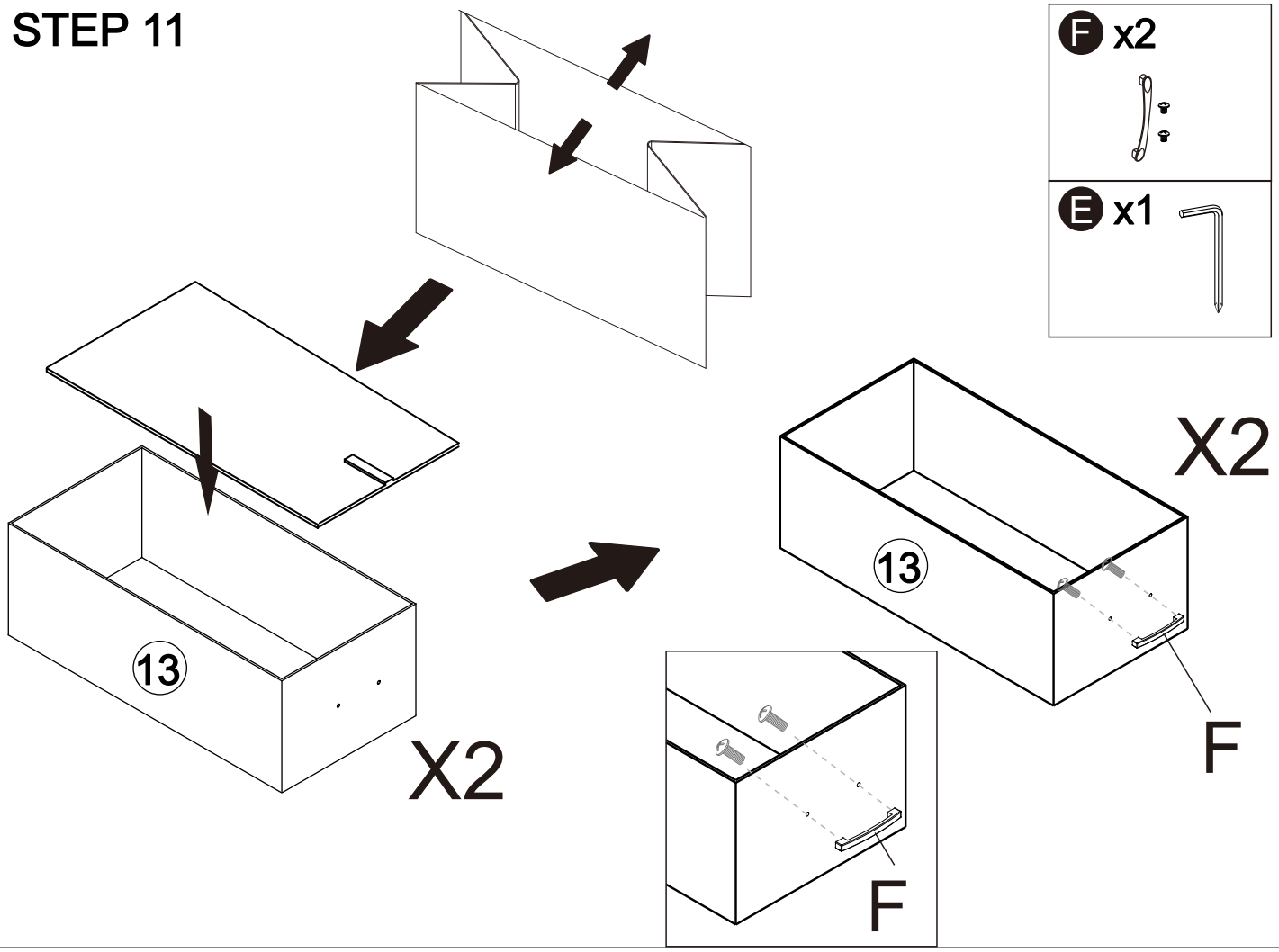

STEP 12

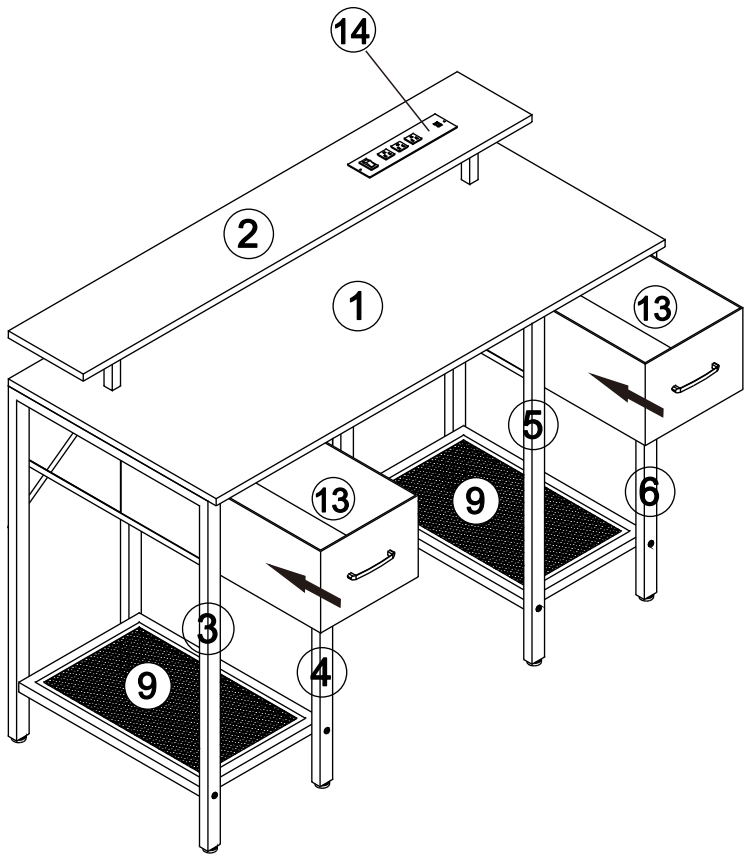

STEP 13

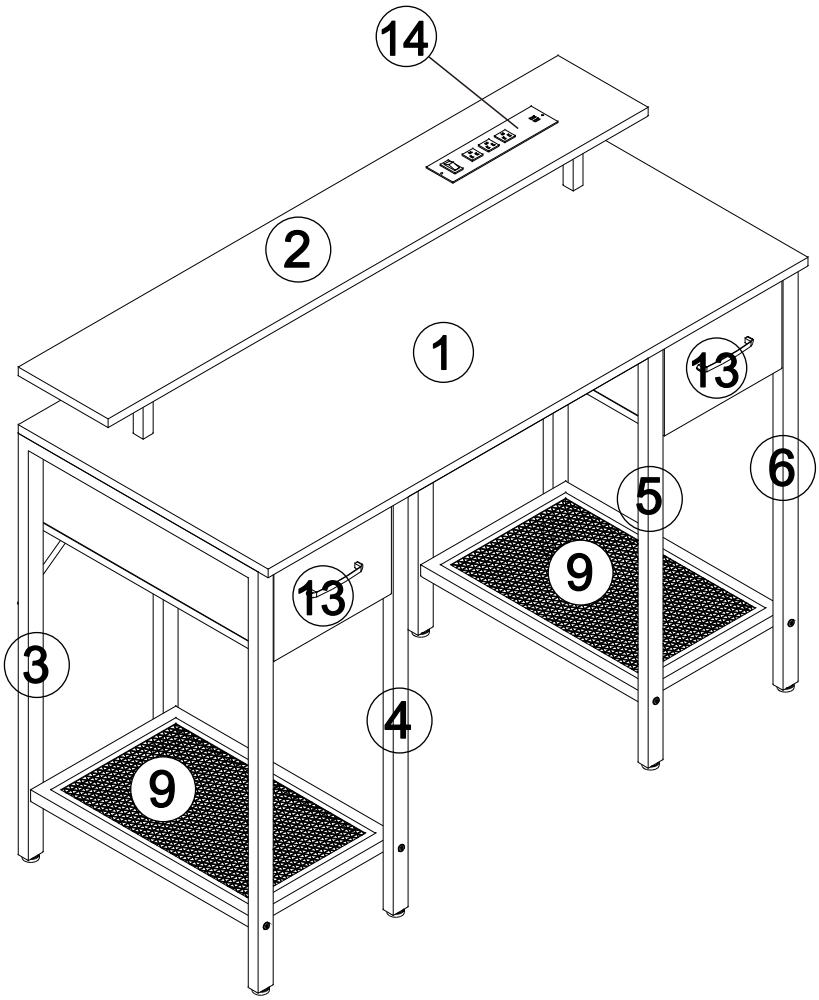

⚠ WARNING

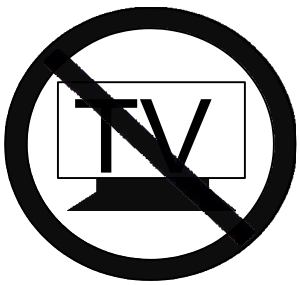

Children have died from furniture tipover. To reduce the risk of furniture tipover:

- ALWAYS install tipover restraint provided.
- NEVER put a TV on this product.
- NEVER allow children to stand, climb or hang on drawers, doors, or shelves.
- NEVER open more than one drawer at a time.
- Place heaviest items in the lowest drawers.