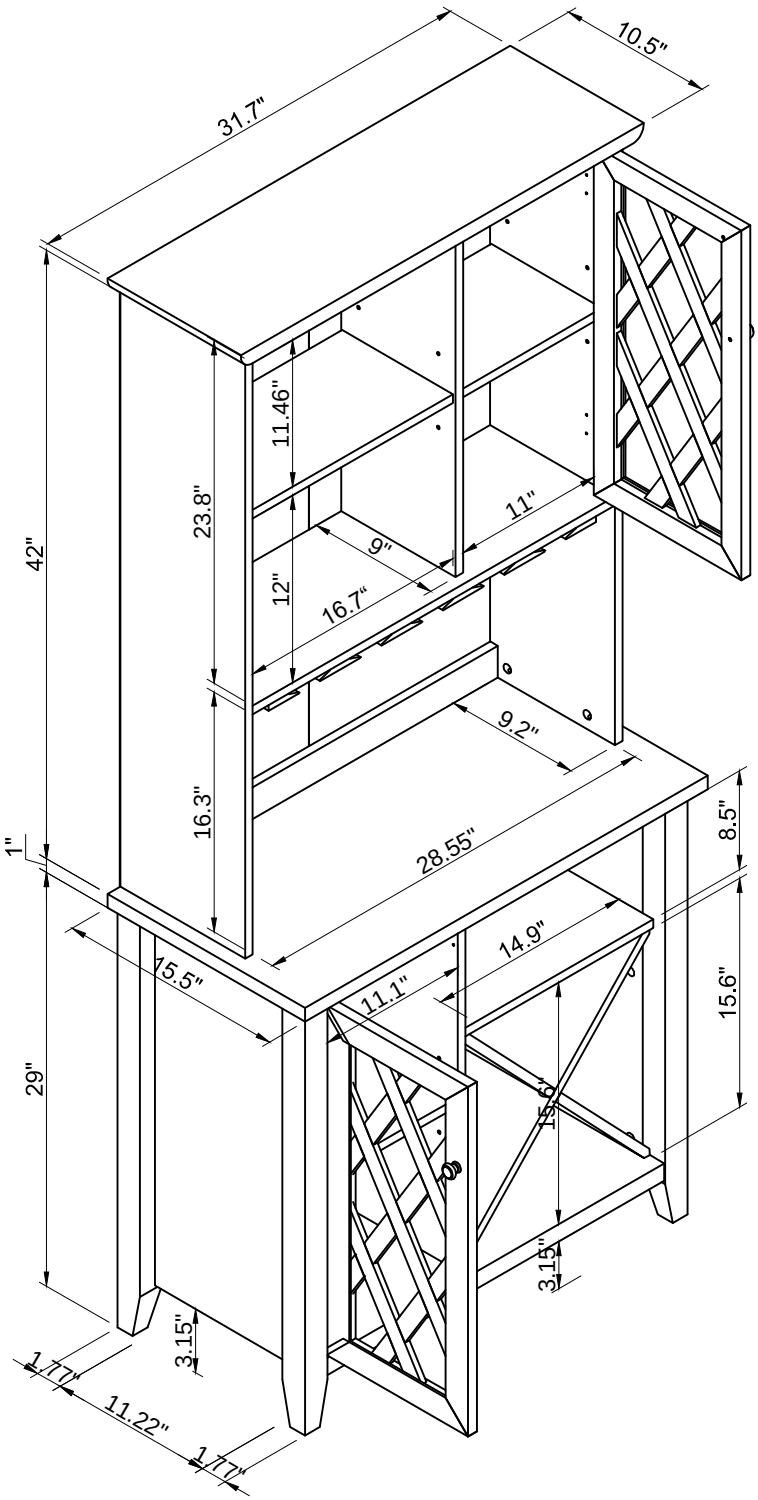
31.7"
10.5"
42"
23.8"
11.46"
12"
9"
16.7"
11"
16.3"
9.2"
28.55"
1"
29"
15.5"
11.1"
14.9"
8.5"
15.6"
15.6"
3.15"
3.15"
1.77"
11.22"
1.77"