DRESSER
ASSEMBLY INSTRUCTIONS

ASSEMBLY TIPS:

1. Remove hardware from box and sort by size.
2. Please check to see that all hardware and parts are present prior to start of assembly.
3. Please follow attached instructions in the same sequence as numbered to assure fast & easy assembly.

Warning!

1. Don't attempt to repair or modify parts that are broken or defective. Please contact the store immediately.
2. This product is for home use only and not intended for commercial establishments.

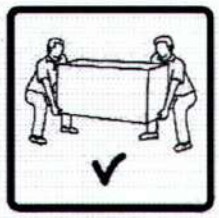

ASSEMBLY TIME	10 MINUTES

PARTS IDENTIFICATION

	PART NAME	FIGURE	QTY
A	DRESSER		1PC

NOTE : PHILLIPS HEAD SCREW DRIVER IS REQUIRED IN THE ASSEMBLY PROCESS; HOWEVER, MANUFACTURER DOES NOT PROVIDE THIS ITEM.

STEP 1

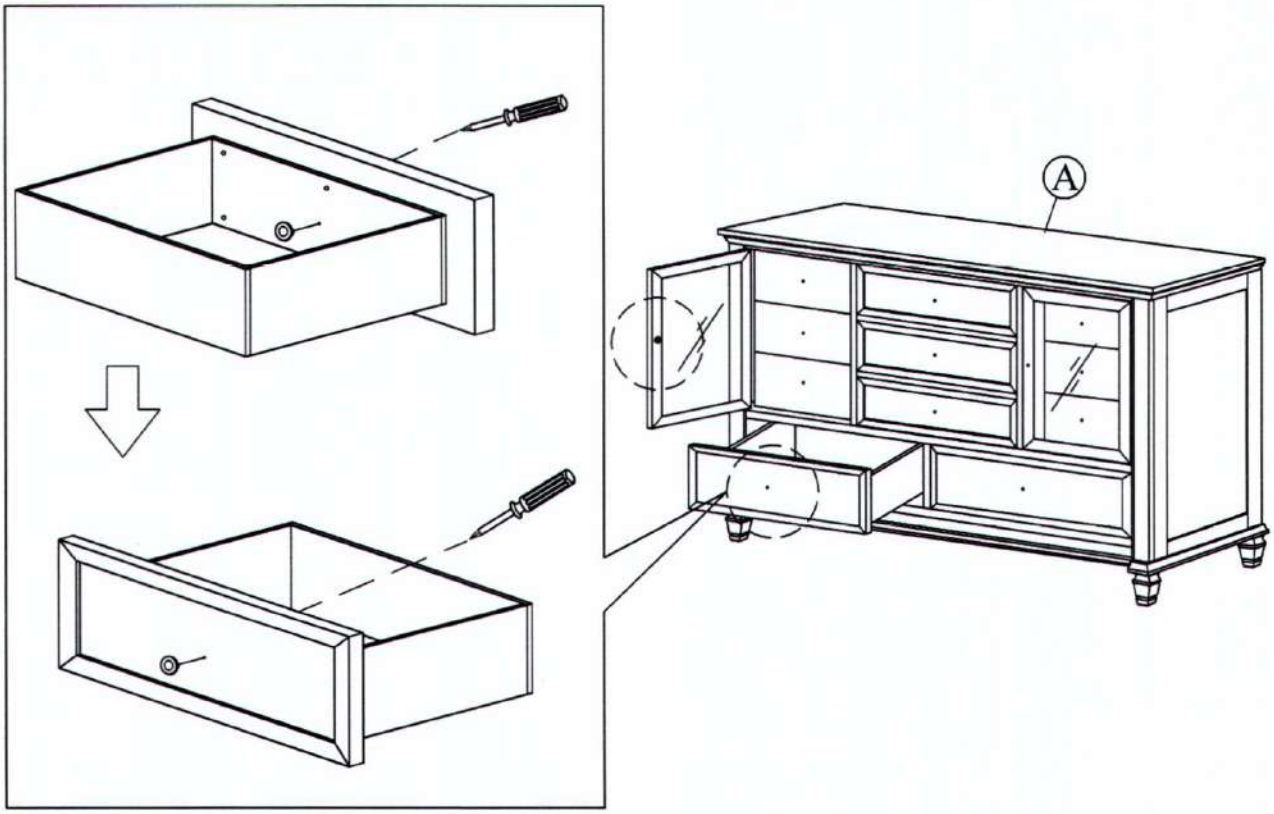

STEP 2

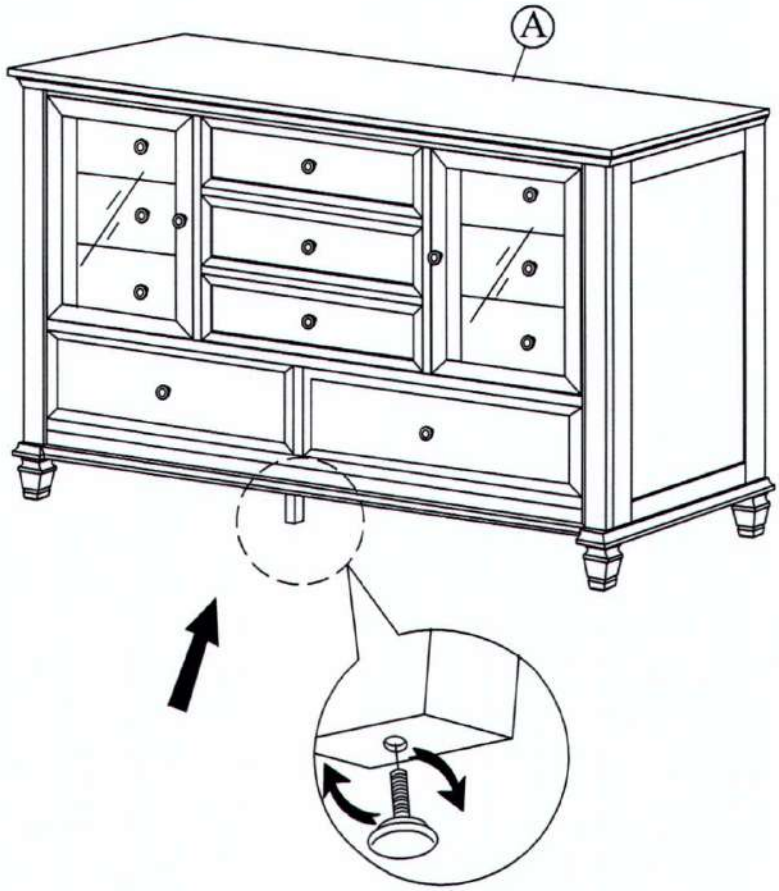

STEP 3
COMPLETE

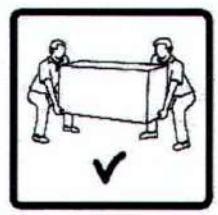

ANTI-TIPPING INSTALLMENT INSTRUCTIONS

FURNITURE TIPPING RESTRAINT

WARNING

Injury may result from tipping furniture.
This restraint may protect against tipping furniture.
Do not allow children to climb on furniture.
This restraint is not a substitute for proper adult supervision.
Failure to detach this restraint before moving the furniture
may result in injury and damage.

This tip restraint must be attached to a wall stud using long screw enclosed.

STEP 1

Attach a bracket securely to the back top rail of the furniture using short screw provided, through the smaller hole.

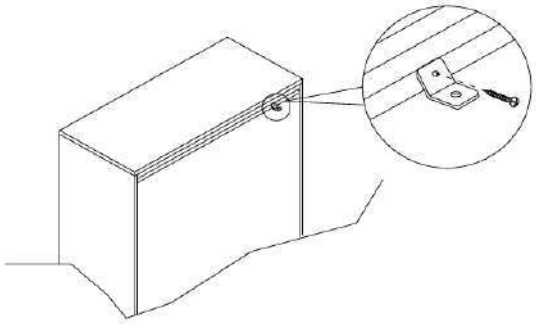

STEP 2

Locate the other bracket on the wall over a wall stud and two inches below the mounting bracket secured to the back of the furniture. Attach the wall stud using the long screw provided, through the smaller hole.

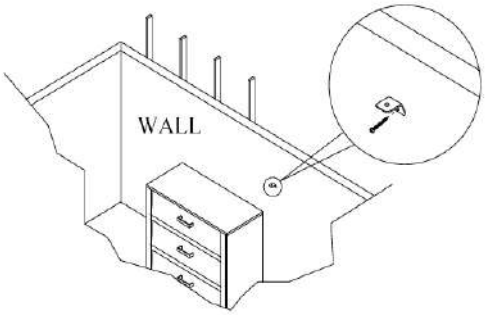

STEP 3
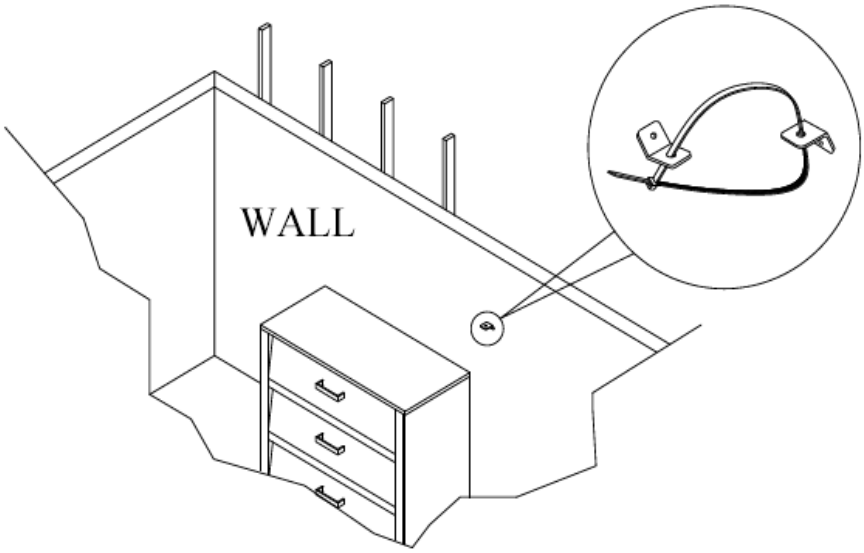
Place the furniture into position so both mounting brackets are vertically in line. Lace the end of the restraint strap through the larger hole in each mounting bracket. Bring both ends together and slide the flat end through the locking end and draw it through until all slack is removed. Confirm that the strap is securely laced and locked.