NIGHT STAND
Assembly Manual
KJW.B008

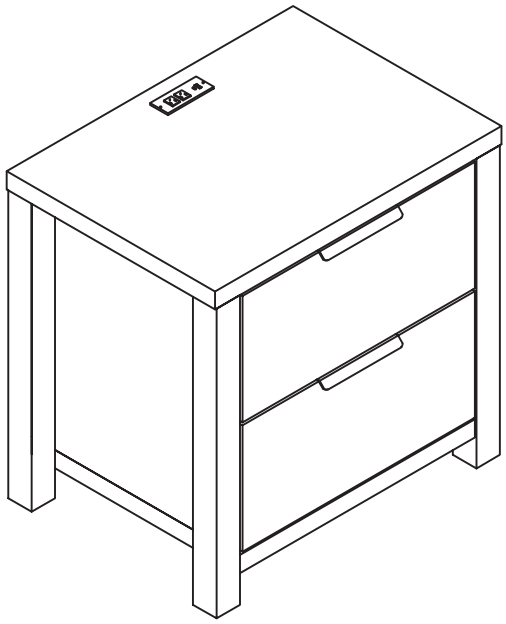

CAUTION

THIS ASSEMBLY MANUAL CONTAINS IMPORTANT SAFETY INFORMATION.
PLEASE READ AND KEEP FOR FUTURE REFERENCE.

ASSEMBLY INSTRUCTIONS

Read these instructions carefully and keep for future reference. Refer to parts inventory for guidance, and ensure you have all pieces before starting.

When assembling, place all parts on a soft, clean, and flat surface such as a carpet to prevent scratches.

Structural integrity is only guaranteed if all bolts are installed and properly tihgtened.



TIME



2 OF PEOPLE

Part List

1 x1 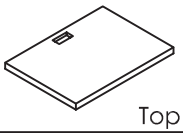 Top Panel	2 x1 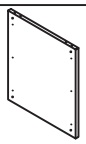 Left Side Panel	3 x1 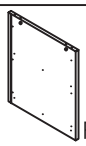 Right Side Panel	4 x1 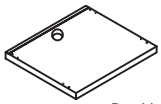 Bottom Panel
5 x1 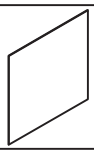 Back Panel	6 x1  Left Front Leg	7 x1  Right Front Leg	8 x1  Left Back Leg
9 x1  Right Back Leg	10 x2 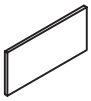 Drawer Front Panel	11 x2  Drawer Side Panel (L)	12 x2  Drawer Side Panel (R)
13 x2  Drawer Back Panel	14 x2 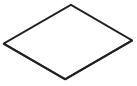 Drawer Bottom Panel		

Hardware

A x1  Allen Key M4	B x24 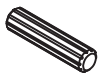 Dowel M8x25mm	C x4 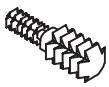 White Pin 6/8	D x4  JCBC W Screw M6x50
E x8  Mini Fix Bolt	F x8 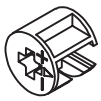 Mini Fix Housing	G x8 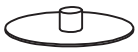 Mini Fix Cap	H x36  CSK Screw M3.5x16mm
I x20  CSK Screw M4x50mm	J x2set  Drawer Slider	K x2 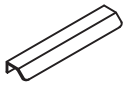 Handle	L x4 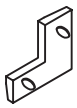 L Bracket
M x4  White Nail	N x2 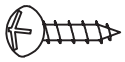 Panhead M3.5x16mm,Black	O x1  USB	Not Included  Mallet
Not Included  Philips Head Screwdriver			

Please read through the instructions below to familiarize yourself with the parts and steps before assembly.

Before you begin:
1.Check if you have received all parts using the diagram on this page. Do not start the assembly process until all parts are present.

2.Do not discard any of the packaging until you are certain that you have all the necessary parts for the assembly.

Extra Hardware

x1 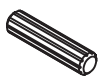 Dowel M8x25mm	x1 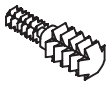 White Pin 6/8	x1  JCBC W Screw M6x50	x1  Mini Fix Bolt
x1 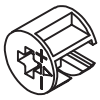 Mini Fix Housing	x1  Mini Fix Cap	x1  CSK Screw M3.5x16mm	x1 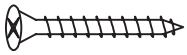 CSK Screw M4x50mm
x1  White Nail	x1 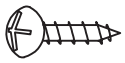 Panhead M3.5x16mm,Black		

ASSEMBLY INSTRUCTION

1 Please lay all parts on a soft and smooth surface to assemble.

BOX 1

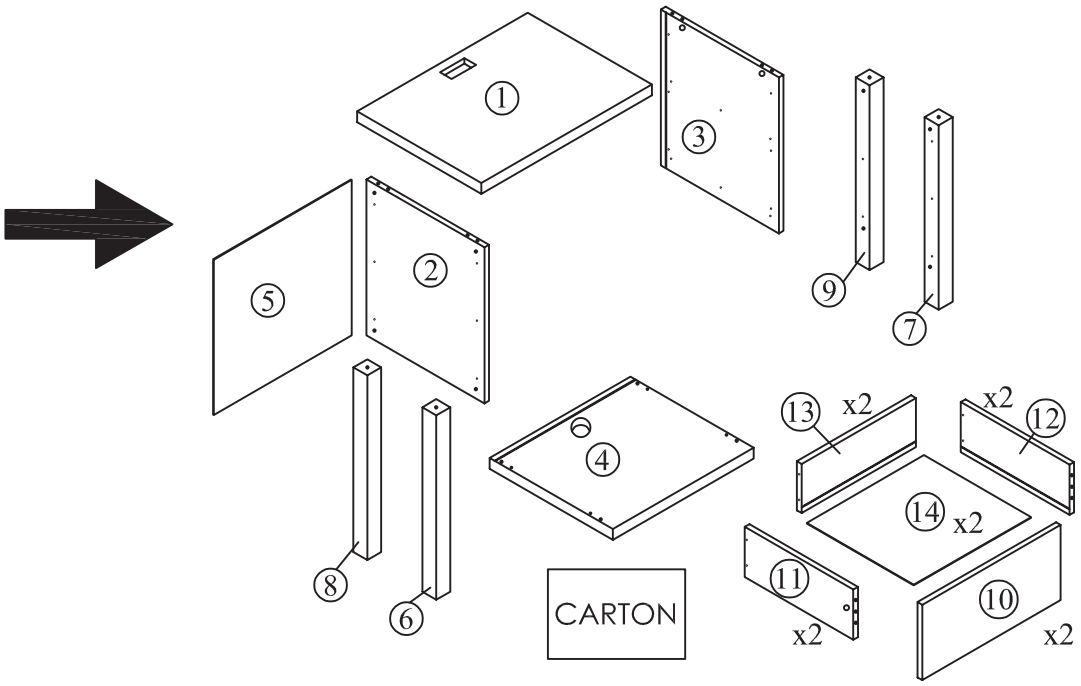

CARTON

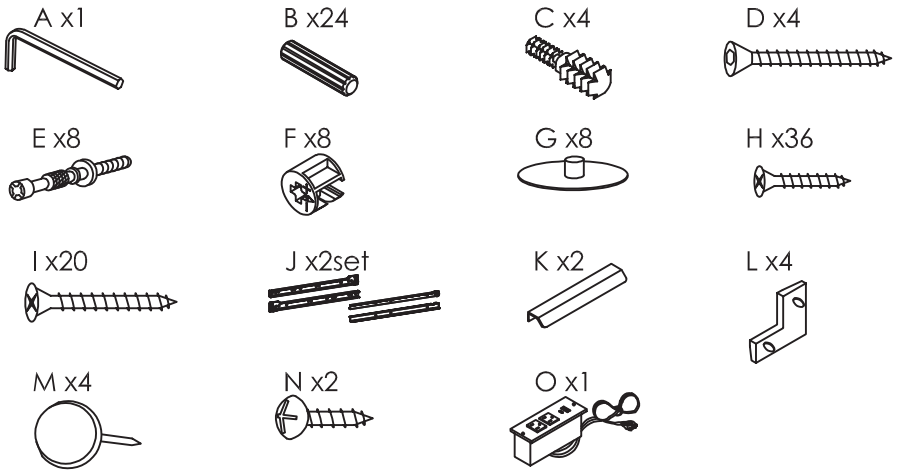

ASSEMBLY INSTRUCTION

2 Attach the 24x Dowel (B) to the all parts as shown.

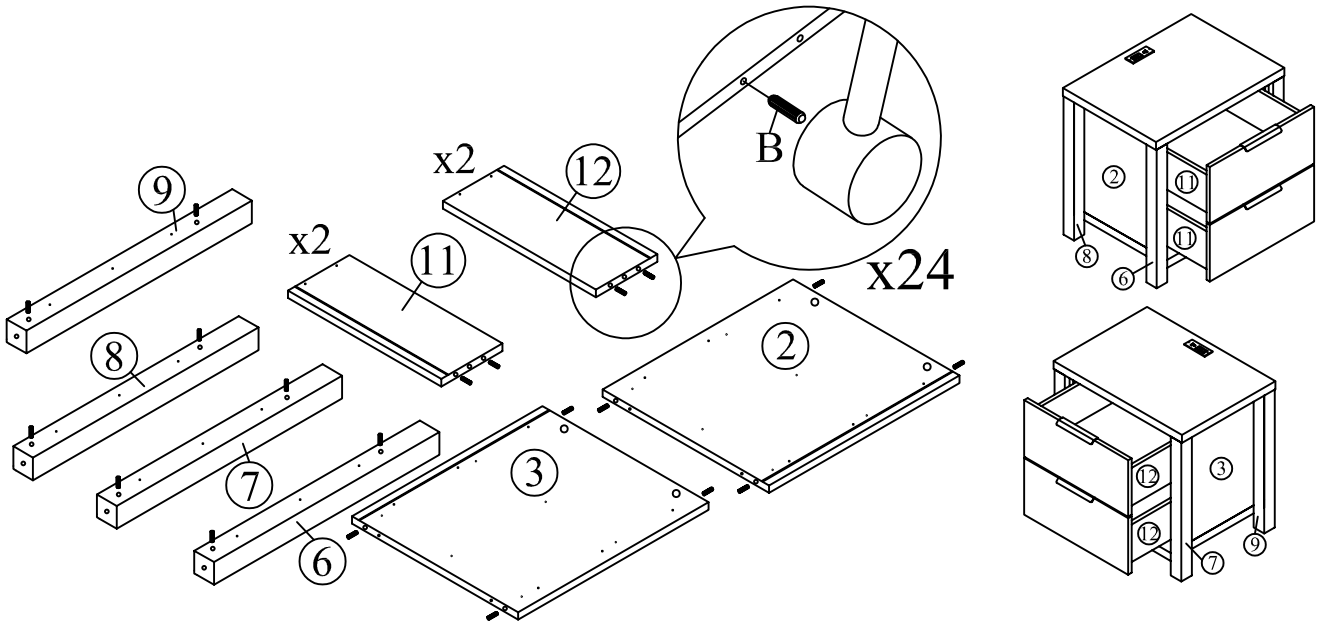

3 Attach the 4x White Pin (C) to the parts 6,7,8,9.Top of bed legs.Ensure the white pin's large head make contact with the leg's surface.

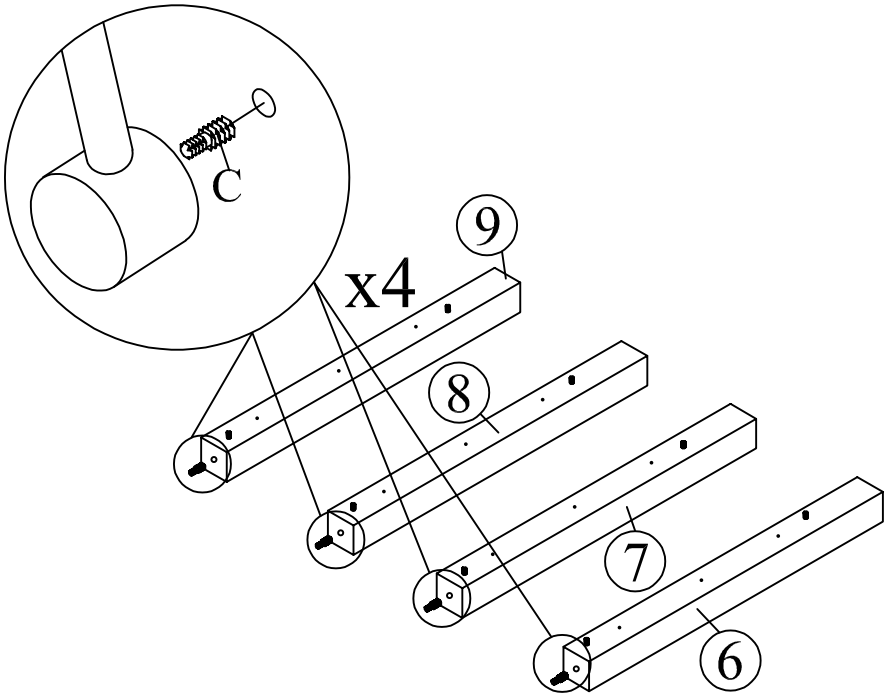

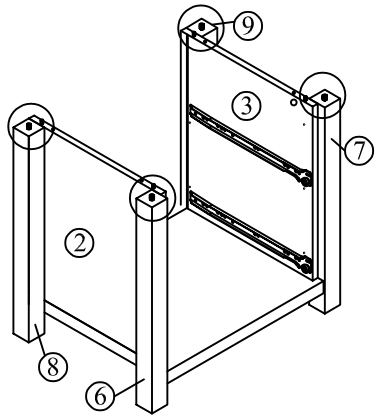

ASSEMBLY INSTRUCTION

4 Attach the 8x Minifix Bolt (E) to the all parts as shown.

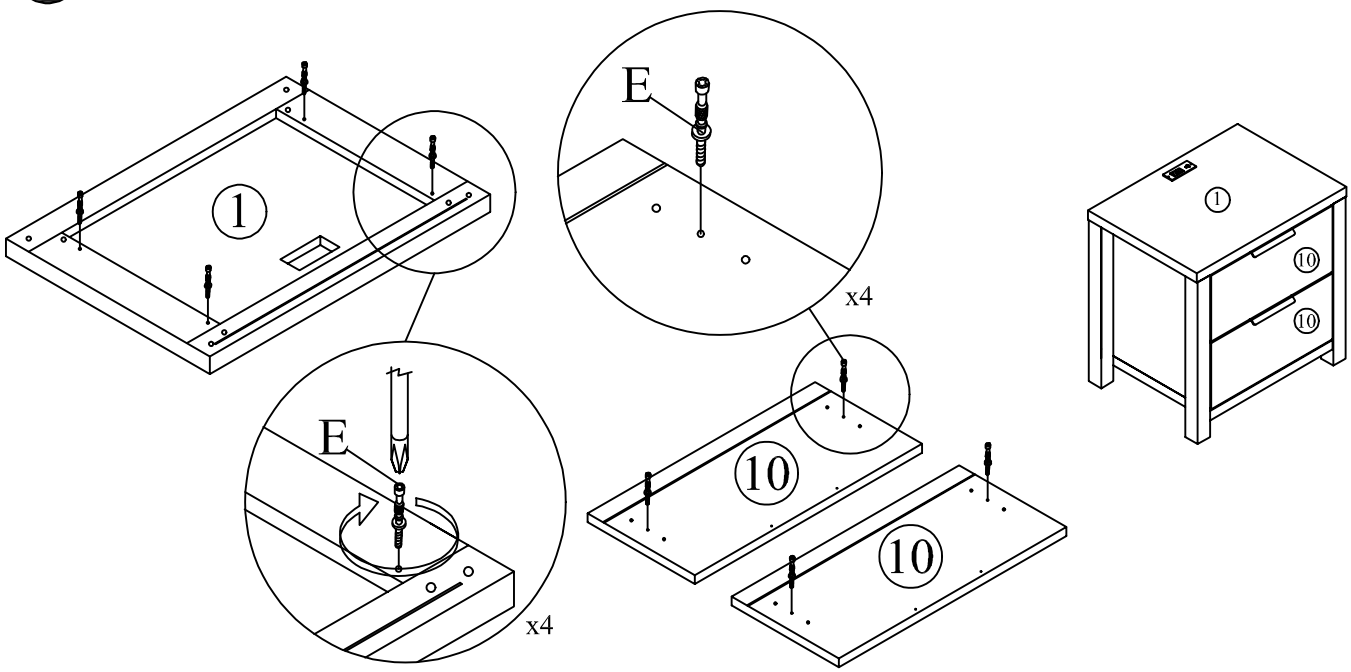

5 Attach the 2x Drawer Slider (J) to 1x Right Side Panel (3) using CSK Screw M3.5x16mm (H).

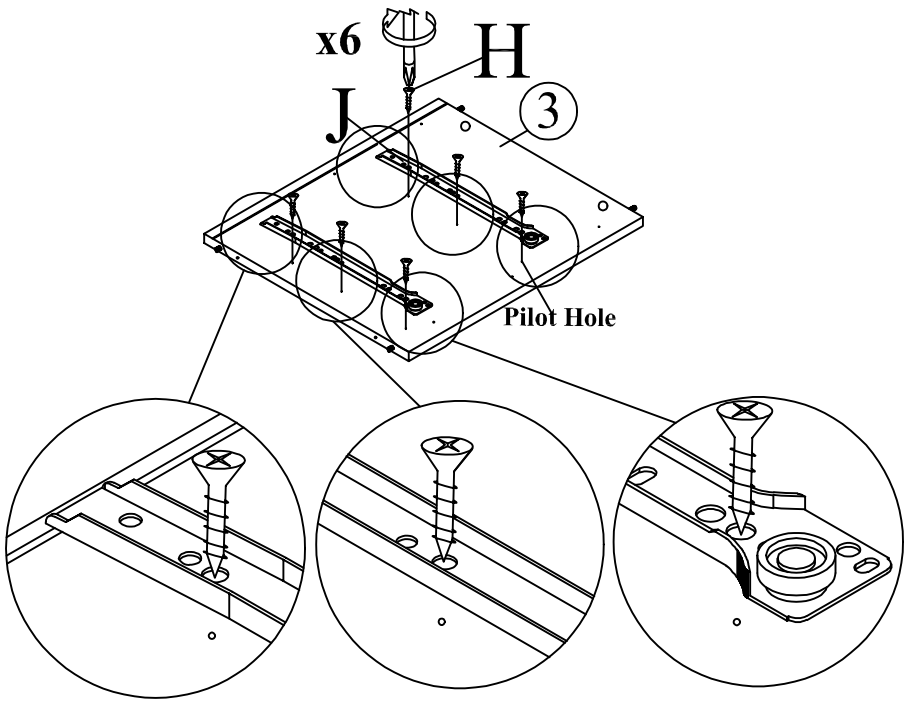

ASSEMBLY INSTRUCTION

6 Attach the 2x Drawer Slider (J) to 1x Left Side Panel (2) using CSK Screw M3.5x16mm (H).

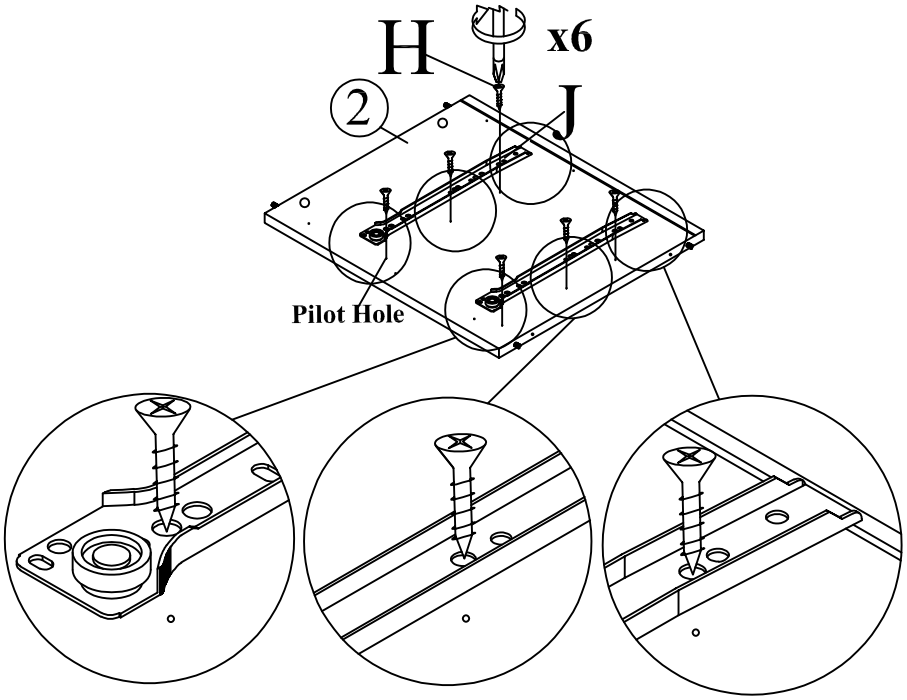

7 Attach Right Front Leg (7) and Right Back Leg (9) to Right Side Panel (3),using CSK Screw M4x50mm.Attach Left Front Leg (6) and Left Back Leg (8) to Left Side Panel (2),using CSK Screw M4x50mm (I).

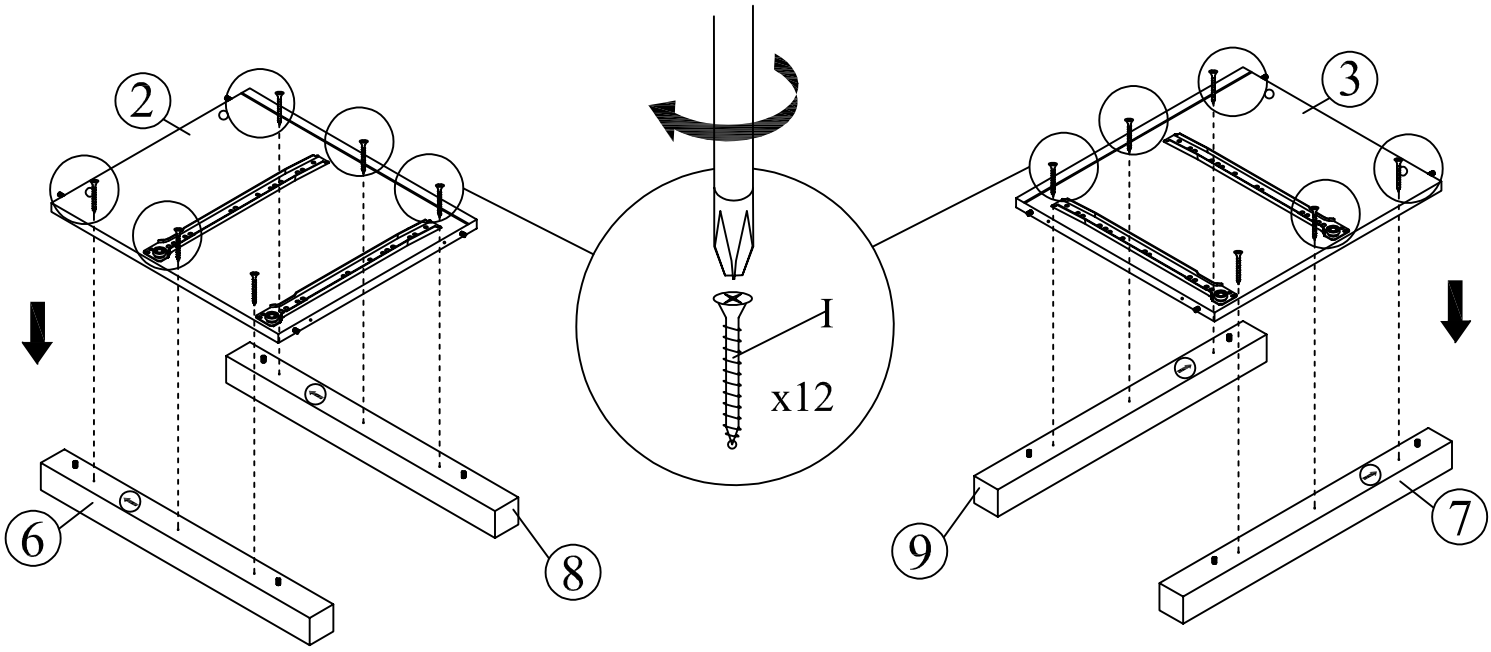

ASSEMBLY INSTRUCTION

8 Attach the Bottom Panel (4) to Left Side Panel (2) and Right Side Panel (3) using JCBC W Screw M6x50 (D) with Allen Key (A).

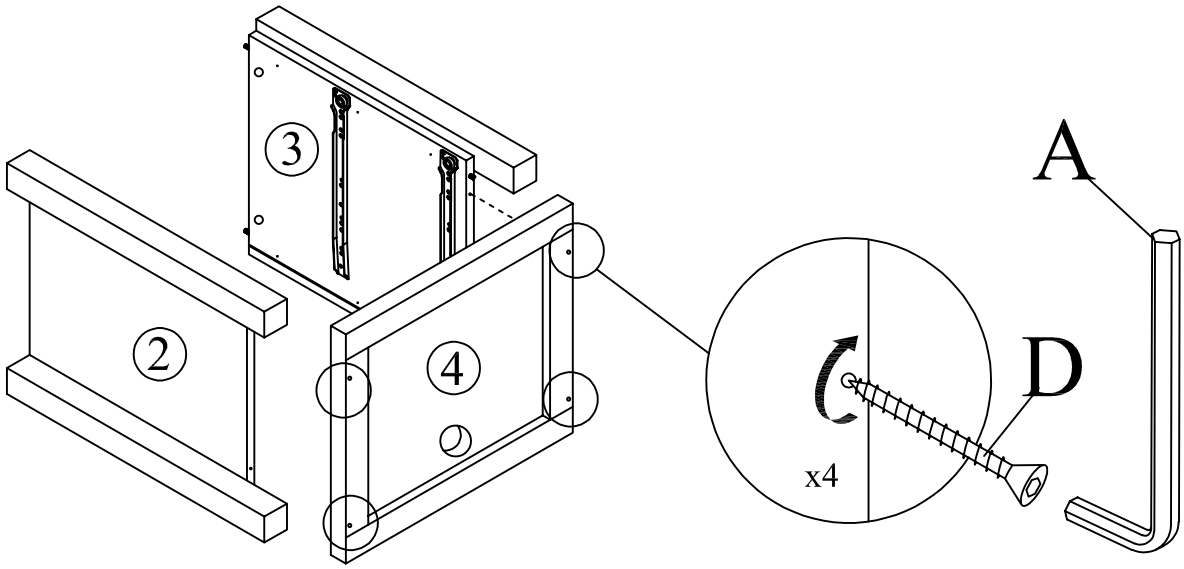

9 Attach the White Nail Leg (M) to the legs using hammer.

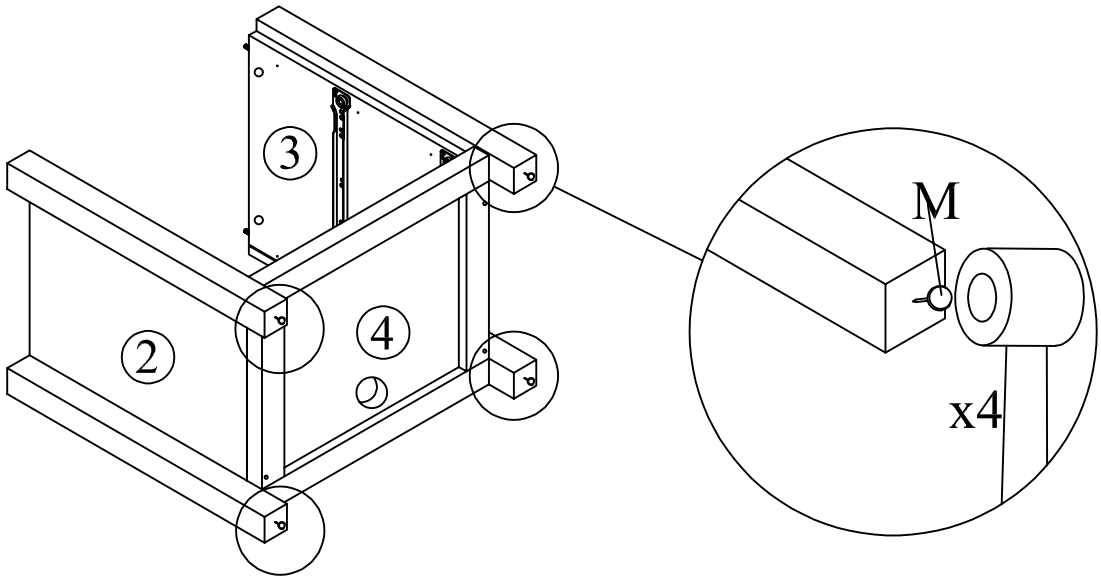

ASSEMBLY INSTRUCTION

10 Slot Back Panel (5) in the slider at Left Side Panel (2) and Right Side Panel (3)

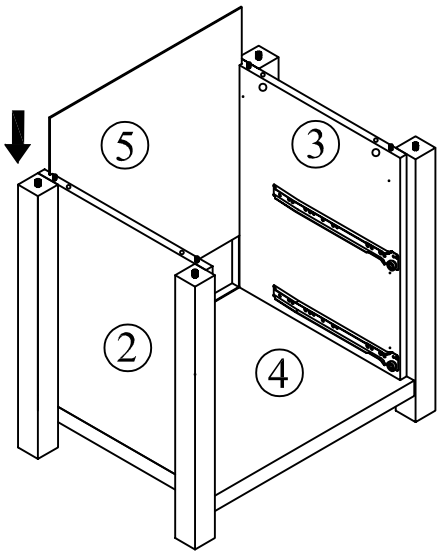

11 Attach the Top Panel (1) to Right Side Panel (3) and Left Side Panel (2) using 4x Minifix Bolt (E) and 4x Minifix Housing (F) and 4x Minifix Cap (G).Turn the 4x Minifix Housing (F) to tighten using the 1x Allen Key (A) or screwdriver (not provided). Cover the 4x Minifix Housing (F) using the 4x Minifix Cap (G) by pressing it into the Minifix House.

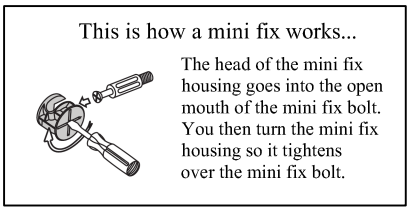

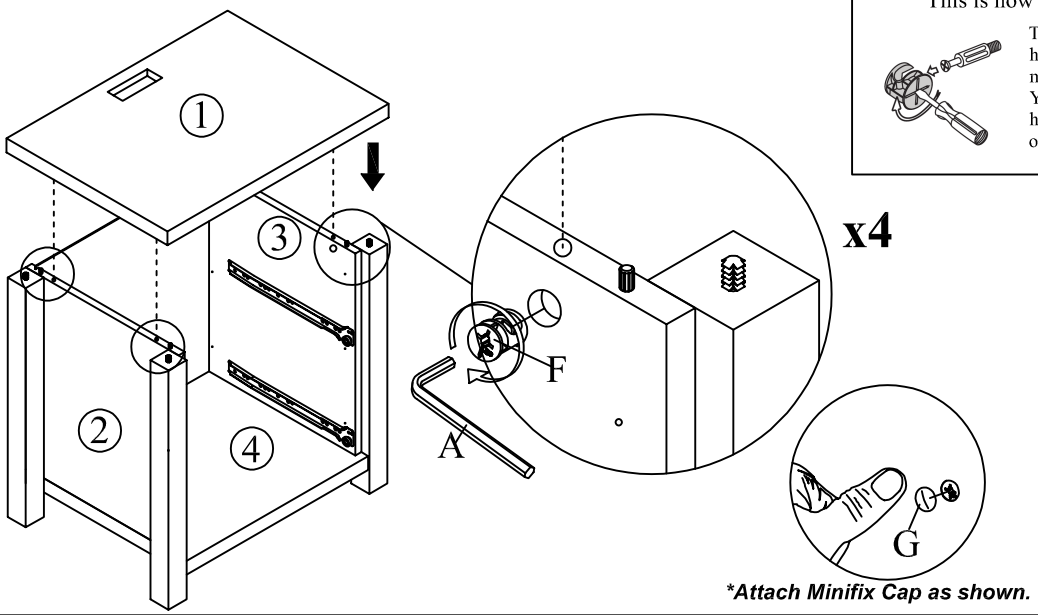

Attach Minifix Cap as shown.

ASSEMBLY INSTRUCTION

12 Attach USB (O) TO Top Panel (1),using Panhead M3.5x16mm,Black (N).

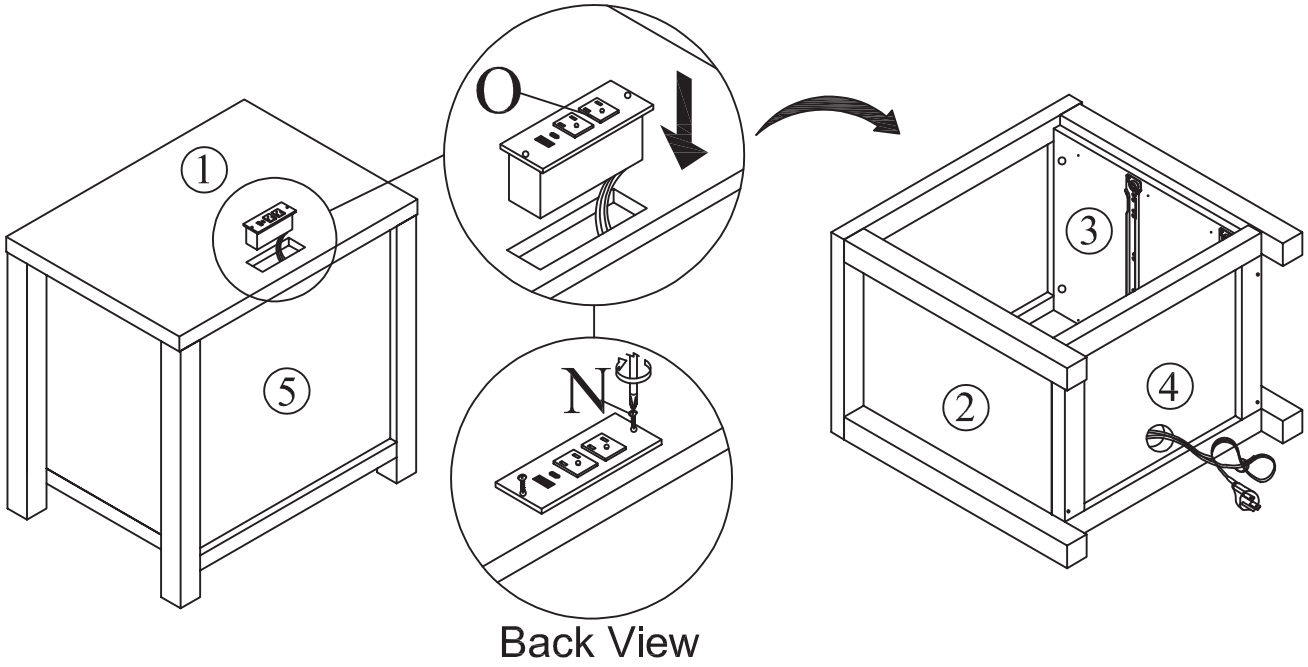

13 Attach the 4x L Bracket (L) to Right Side Panel (3),Left Side Panel (2),Top Panel (1) and 1x Bottom Panel (4) using CSK Screw M3.5x16mm (H).

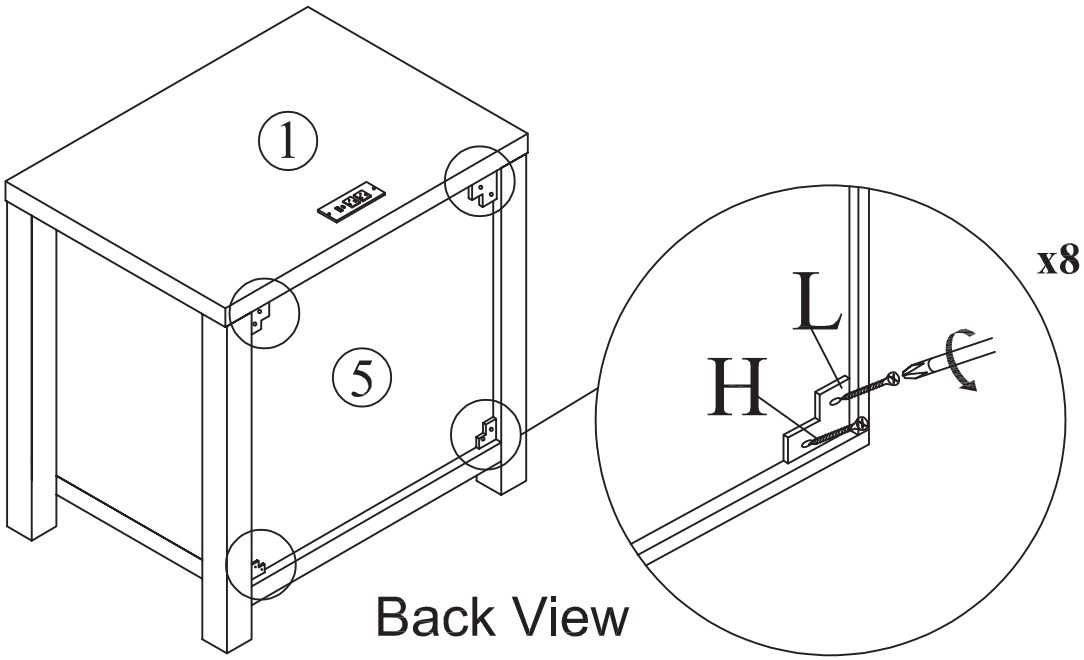

ASSEMBLY INSTRUCTION

14 Attach the Drawer Side Panel (L) (11),Drawer Side Panel (R) (12) to Drawer Front Panel (10) using Minifix Bolt (E) and Minifix Housing (F) and Minifix Cap (G).Turn the Minifix Housing (F) to tighten using the Allen Key (A).Cover the Minifix Housing (F) using the Minifix Cap (G) by pressing it into the Minifix House.

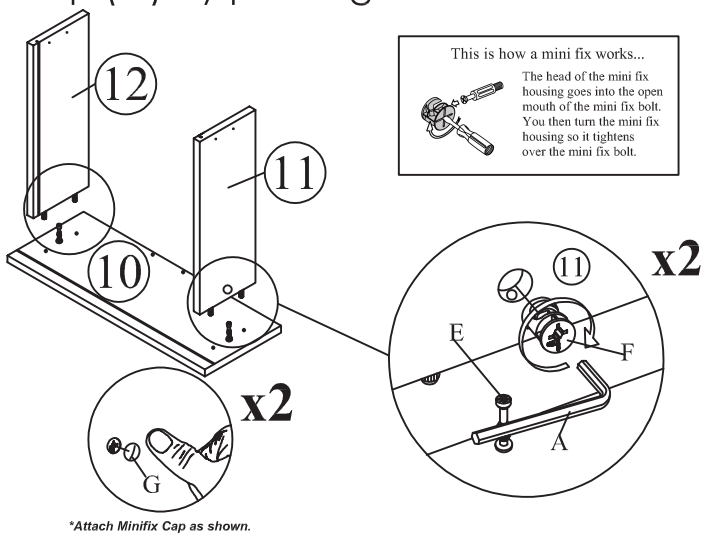

15 Slot Bottom Panel (14) as shown then tighten Drawer Back Panel (13) using CSK Screw M4x50mm (I).

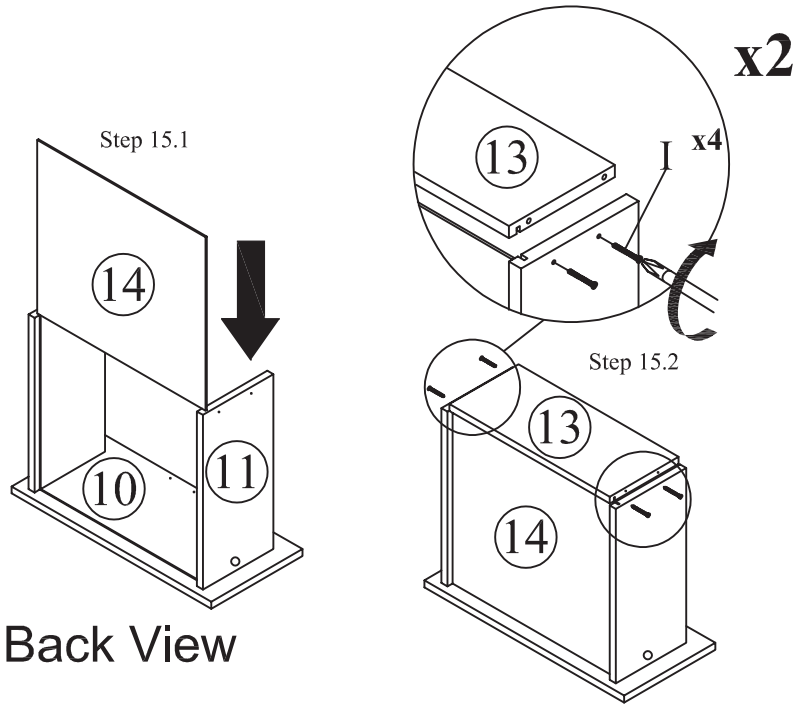

ASSEMBLY INSTRUCTION

16 Tighten the CSK Screw M3.5x16mm (H) and Drawer Slider (J) to Side Panel (L/R) as shown.

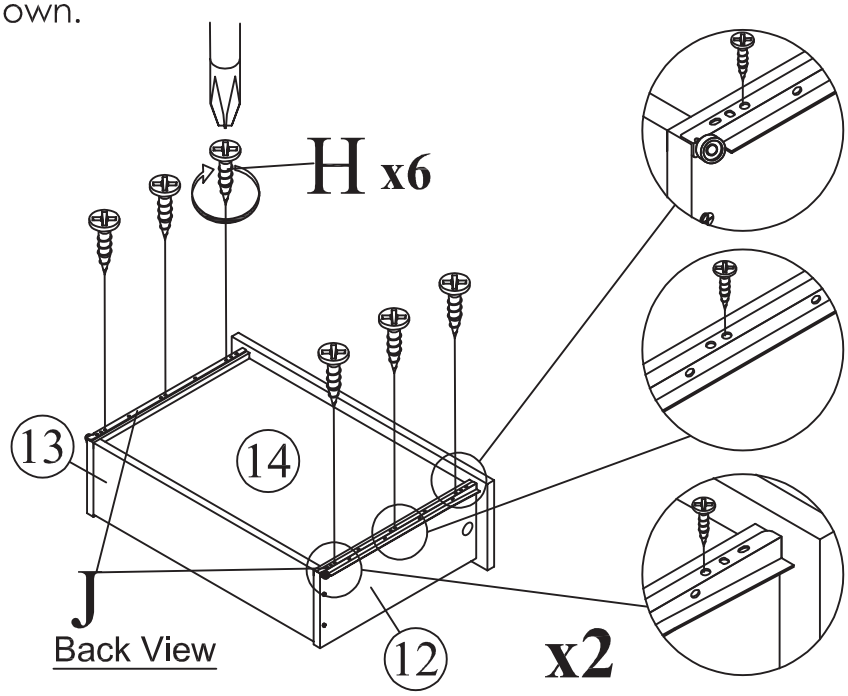

17 Tighten handle (K) using CSK Screw M3.5x16mm (H).

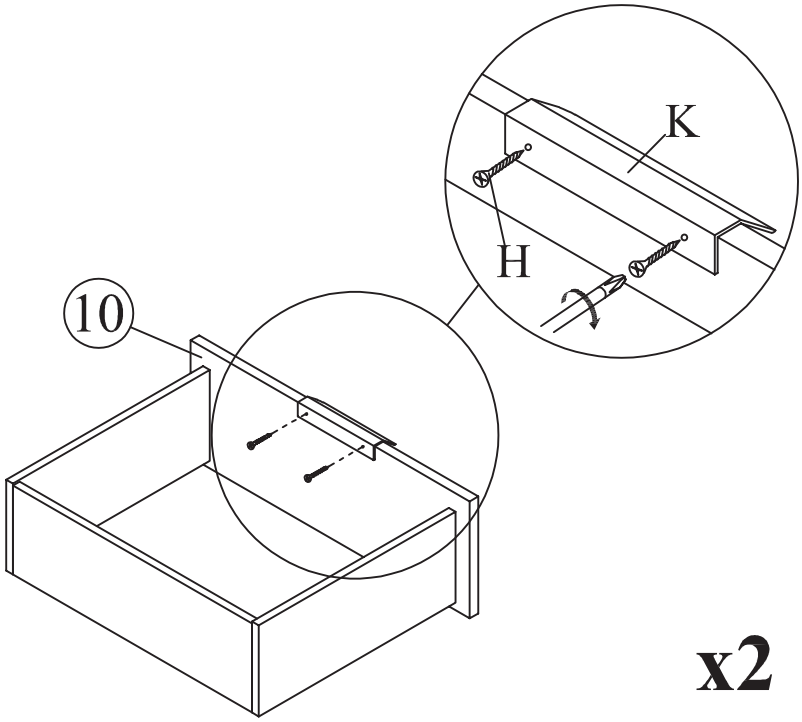

ASSEMBLY INSTRUCTION

18 Insert the drawer on the slider as shown.

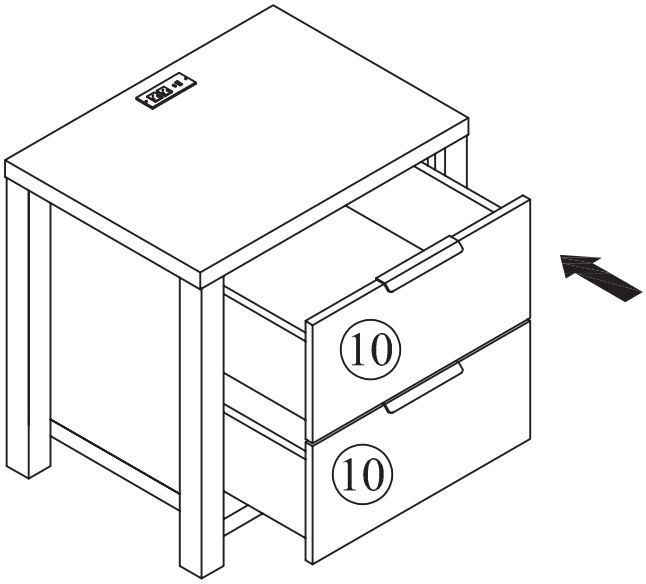

19 Assembly is Complete.

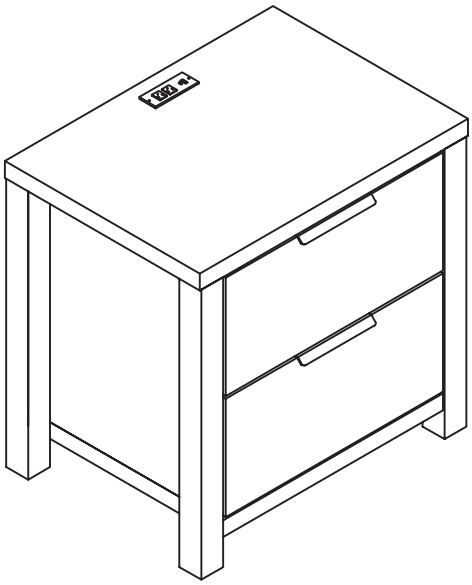

Design Exquisite Furniture For Your Home

PRODUCT WARRANTY

- 1-year limited on cover against splitting, peeling, and/or tearing.
- 1-year limited on internal and external frame structure.

Contact us:

We make all efforts to guarantee that the products you receive are in excellent condition. If there are any parts missing or damaged, the Customer Service Team will be happy to provide free replacements for you.We have professional warehouses where the current inventory of parts is enough so that they will arrive in your hands as fast as possible.

Assistance with assembly or product details is available; don't hesitate to get in touch with us to get priority service.
Our E-mail address: CS.furniture@outlook.com.



CS.furniture@outlook.com.