FLOOR MOUNT SHOWER MIXER

①.Please check all the accessories according to the list when you open the pakage.If missing any of the items, please do not hesitate to contact with us.

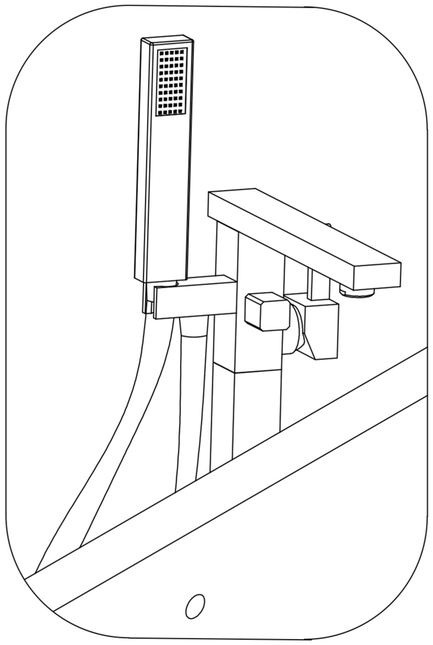

NO.	Name of part	Quantity
1	Main body	1
2	Connection tube	1
3	Allen key	2
4	Screw	4
5	Ornament cover	1
6	Hose	2
7	Fixed base	1
8	Setscrew	3
9	Hand shower	1
10	Shower hose	1
11	Adapter	2
12	Instrcutions	1

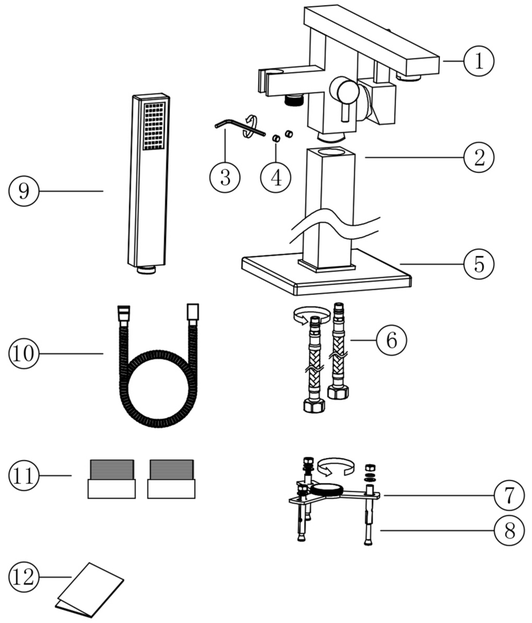

②.Please check if the height of your tub matches the size of our product.

1.Take out the straight tube, fix the base and screw.

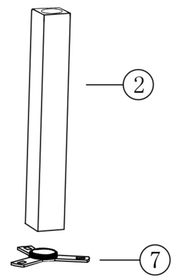

2.Put the ornament cover with a top-down approach at the position of 1/3 of straight tube.

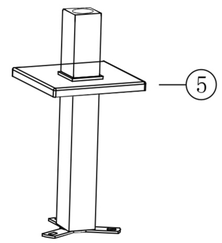

3.Put the hose into the straight tube with a top-down approach, and connects with the main body, then screw.

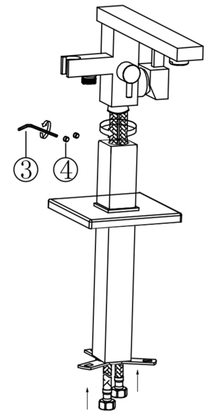

4.install the hose part according to the picture as below.

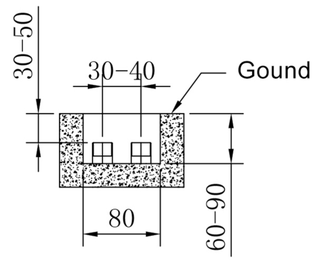

5.Connect the hose with water tube.

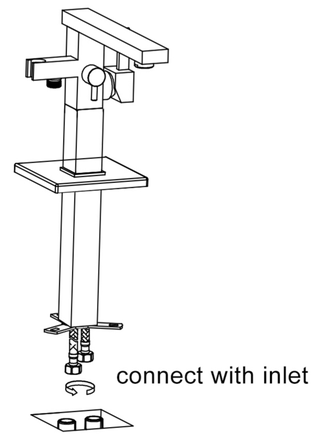

6.Punch with an electric drill, and screw the setscrew, then fix the base.

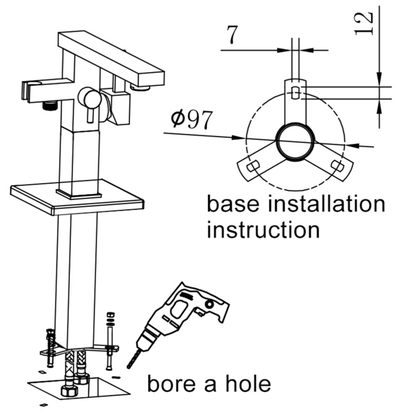

7.Pull the ornament cover on the bottom of the base, until it covers the base.

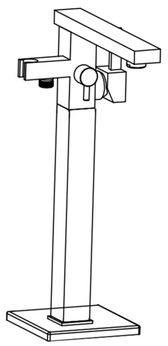

8.Screw the shower hose onto the main body and the hand shower.

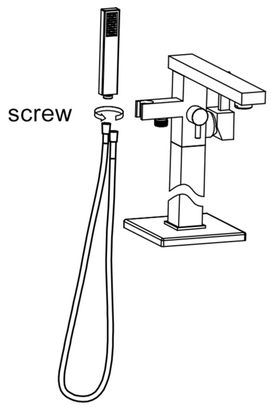
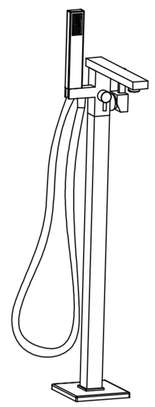
9.Completed