ASSEMBLY INSTRUCTION

20 min

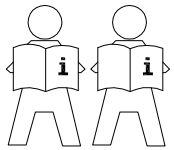

① x 2

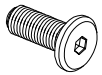

HW-ST-02-046
(8 x 20)

② x 12

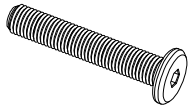

HW-ST-02-055
(8 x 45)

③ x 6

HW-ST-04-492
(50 x 30 x 3)

④ x 12

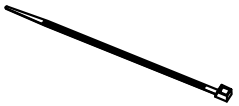

MR06-20-4302504
(5x250)

⑤ x 1

HW-ST-18-001
(4x98)

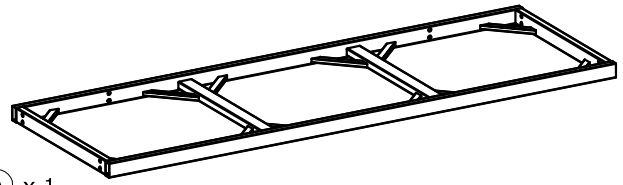

Ⓐ x 1
SU-BE-SP-0138

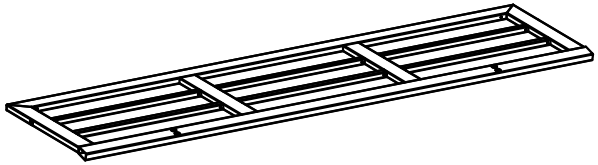

Ⓑ x 1
SU-OT-BF-0078

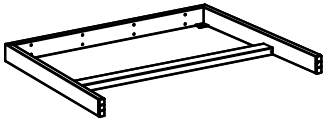

Ⓒ x 1
SU-OT-LF-0195

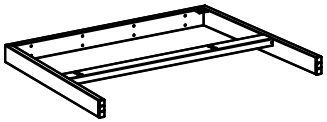

Ⓓ x 1
SU-OT-LF-0198

Ⓔ x 3
SU-BE-ST-0444

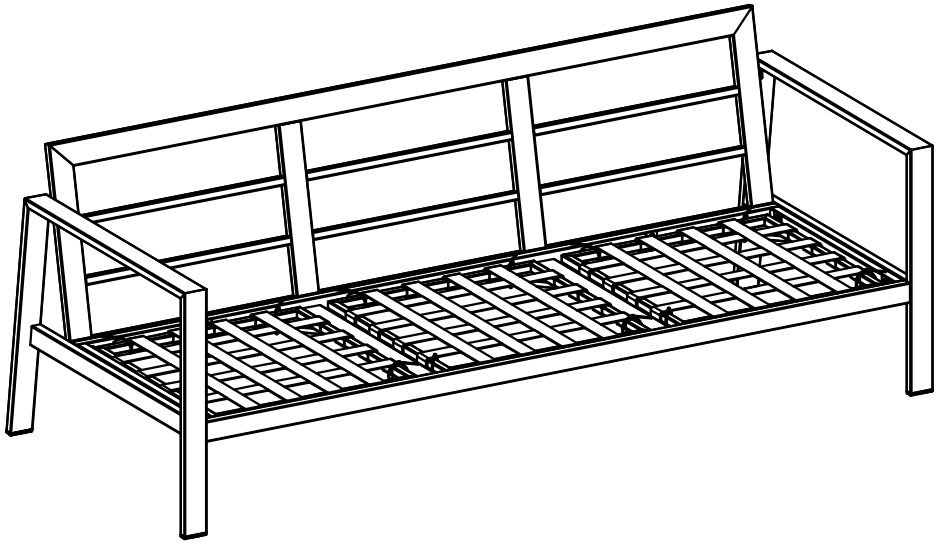

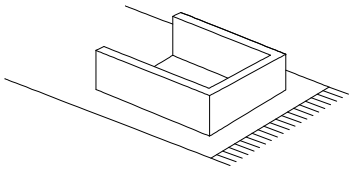

② x 8	③ x 4	⑤ x 1
		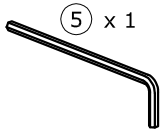
HW-ST-02-055 (8 x 45)	HW-ST-04-492 (50 x 30 x 3)	HW-ST-18-001 (4x98)

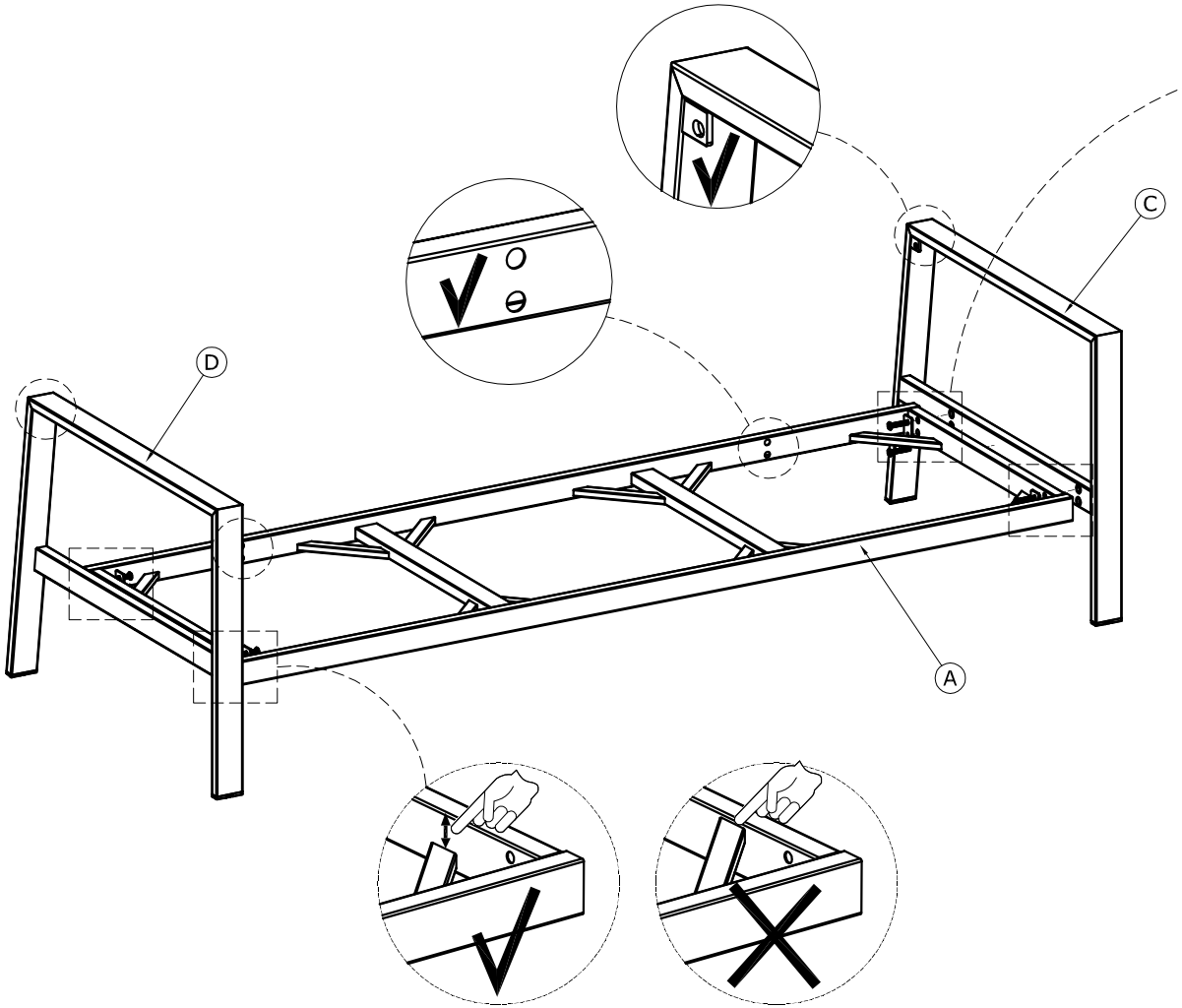

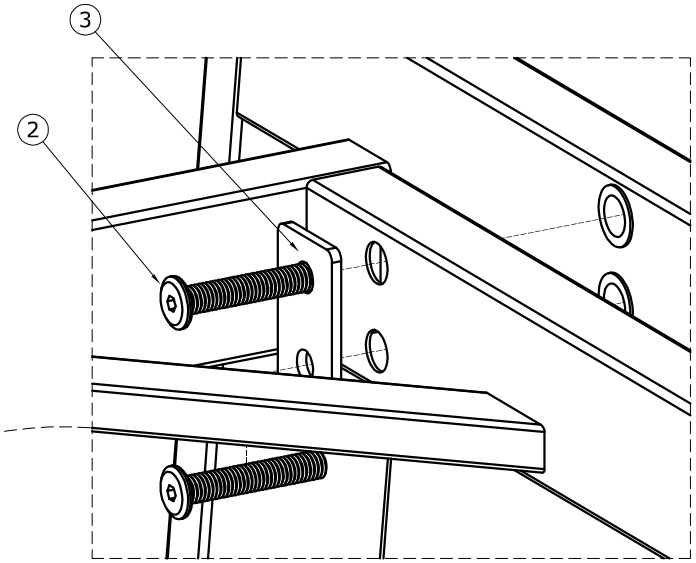

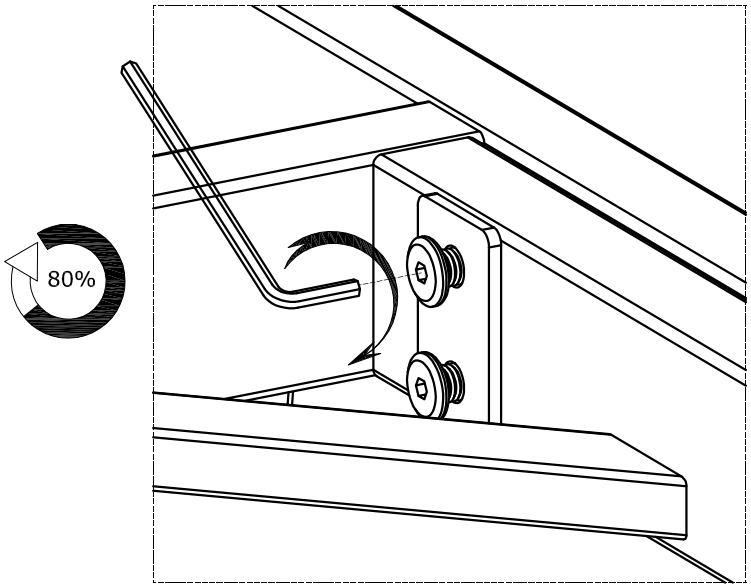

① x 2	② x 4	③ x 2	⑤ x 1
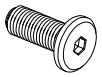			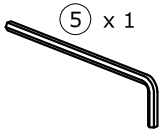
HW-ST-02-046 (8 x 20)	HW-ST-02-055 (8 x 45)	HW-ST-04-492 (50 x 30 x 3)	HW-ST-18-001 (4x98)

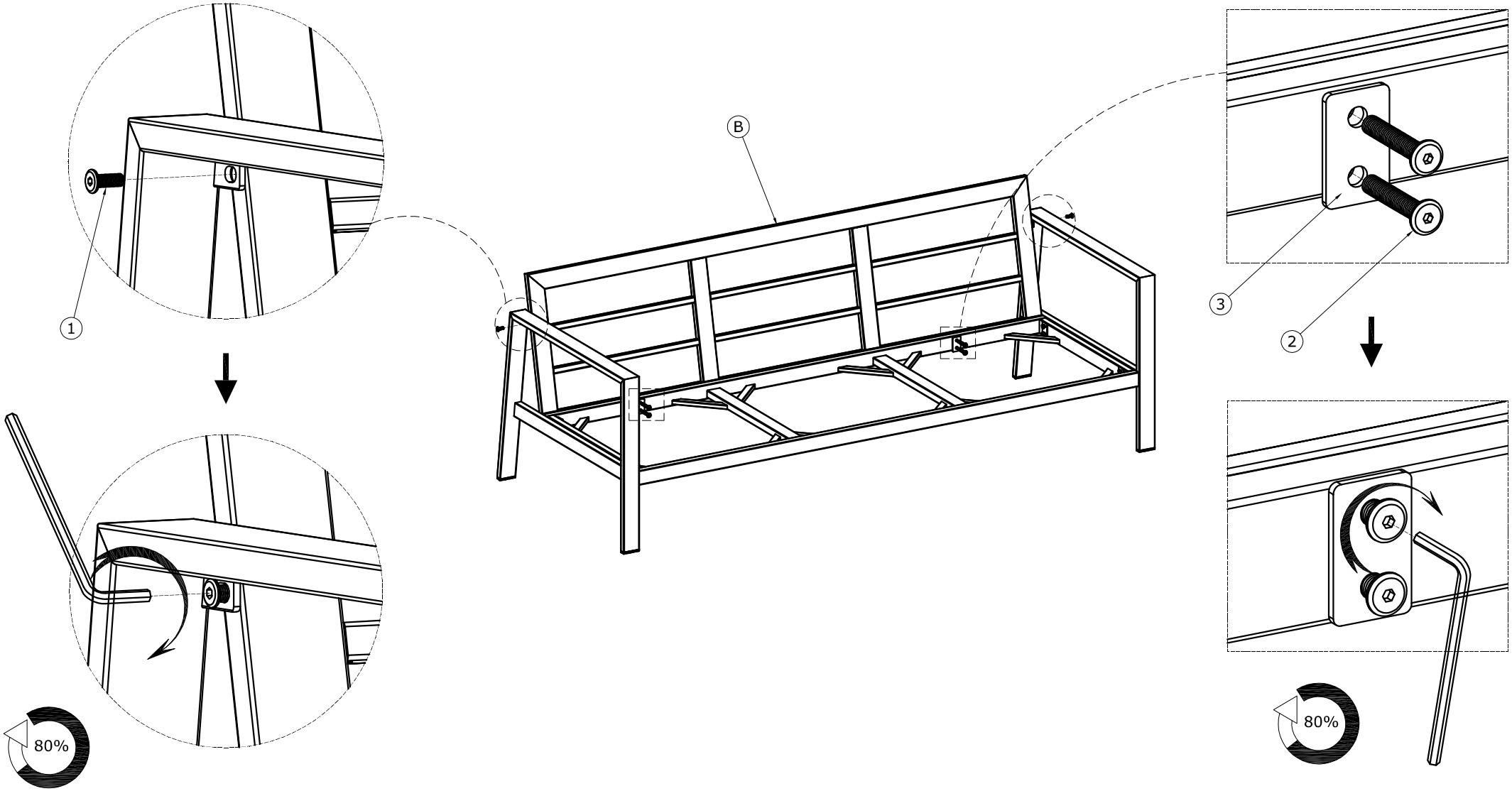

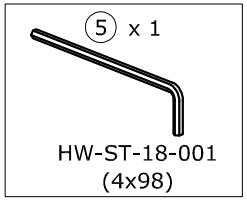
5 x 1
HW-ST-18-001
(4x98)

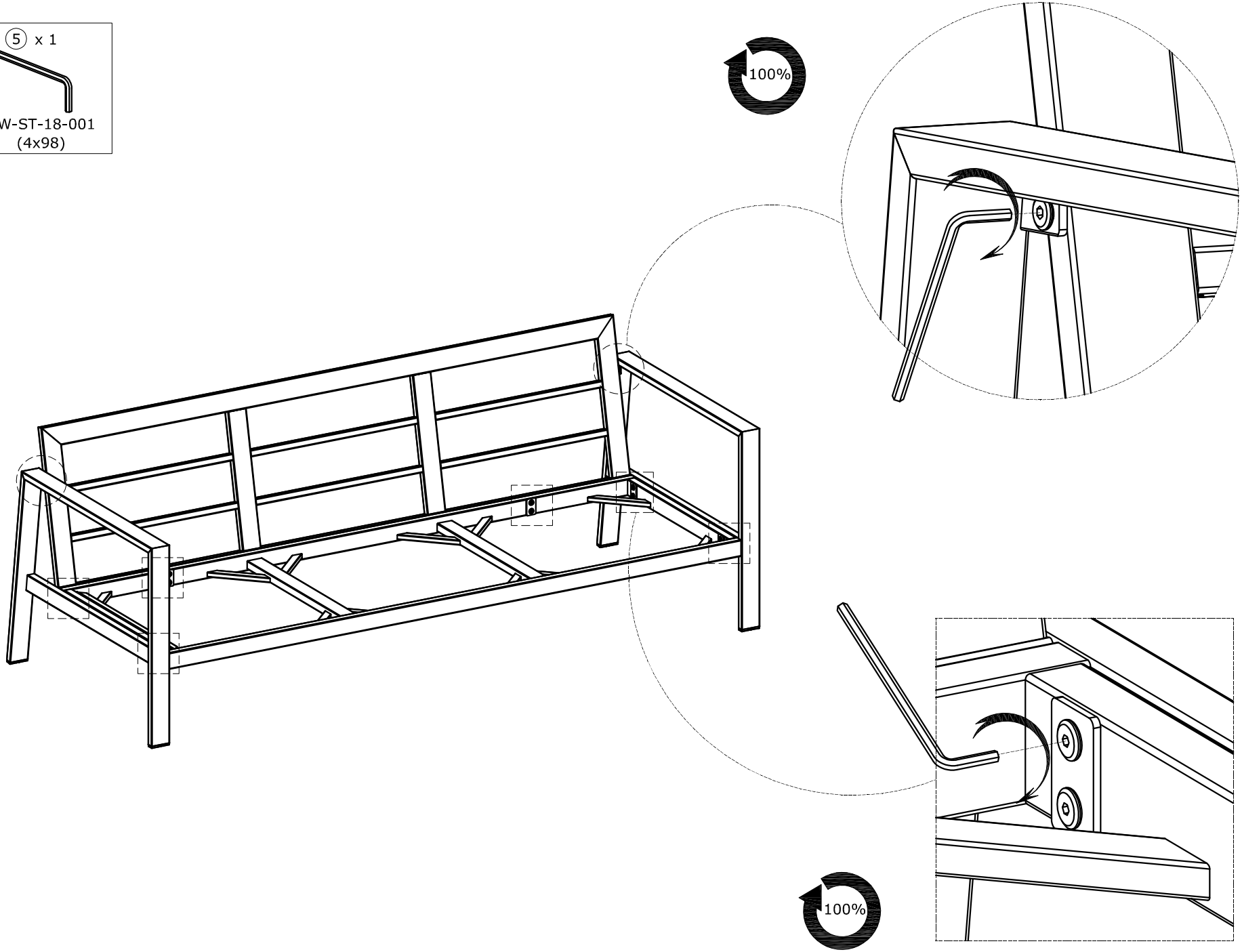
100%
100%

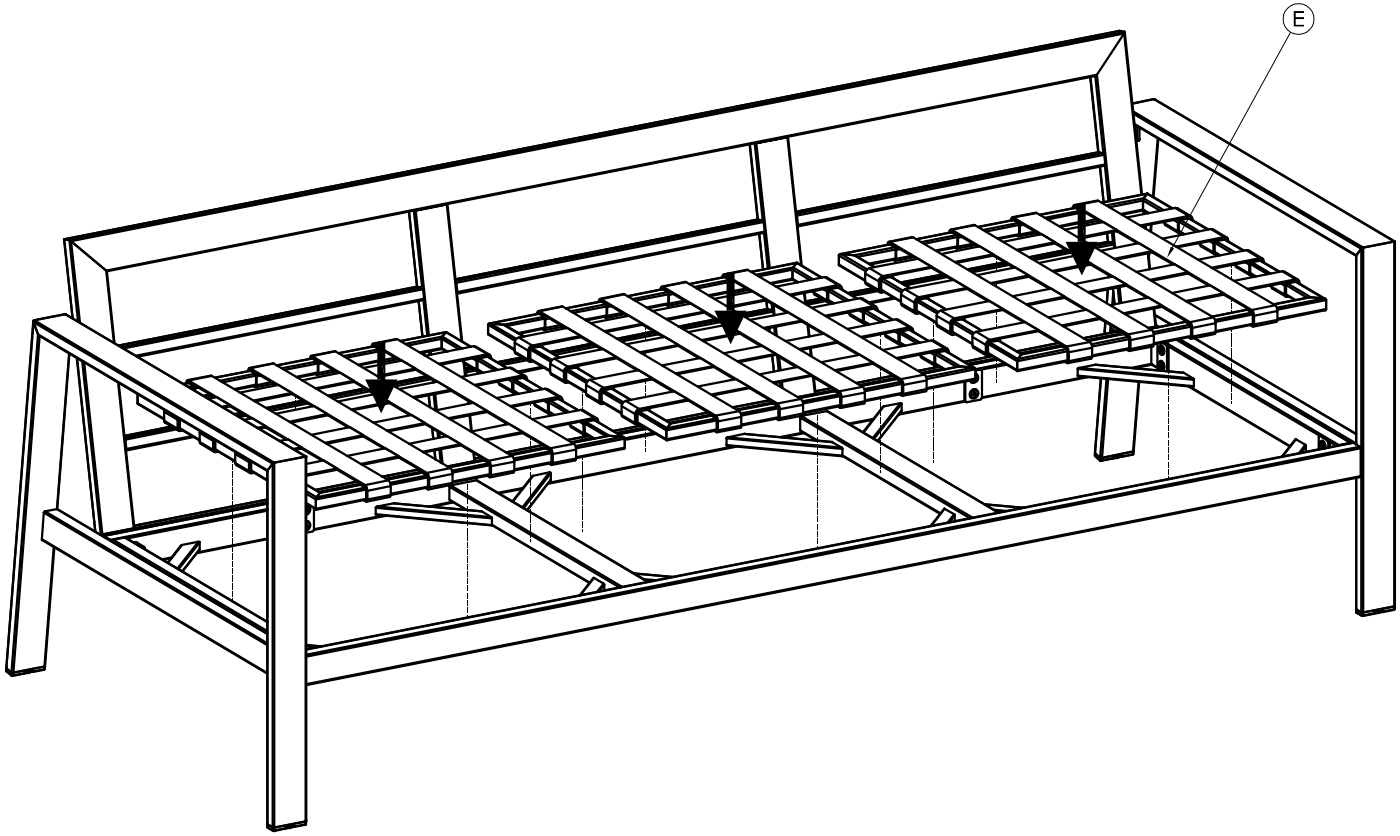
E

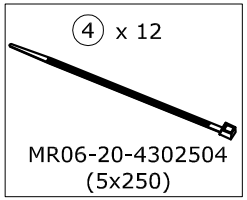
4 x 12
MR06-20-4302504
(5x250)

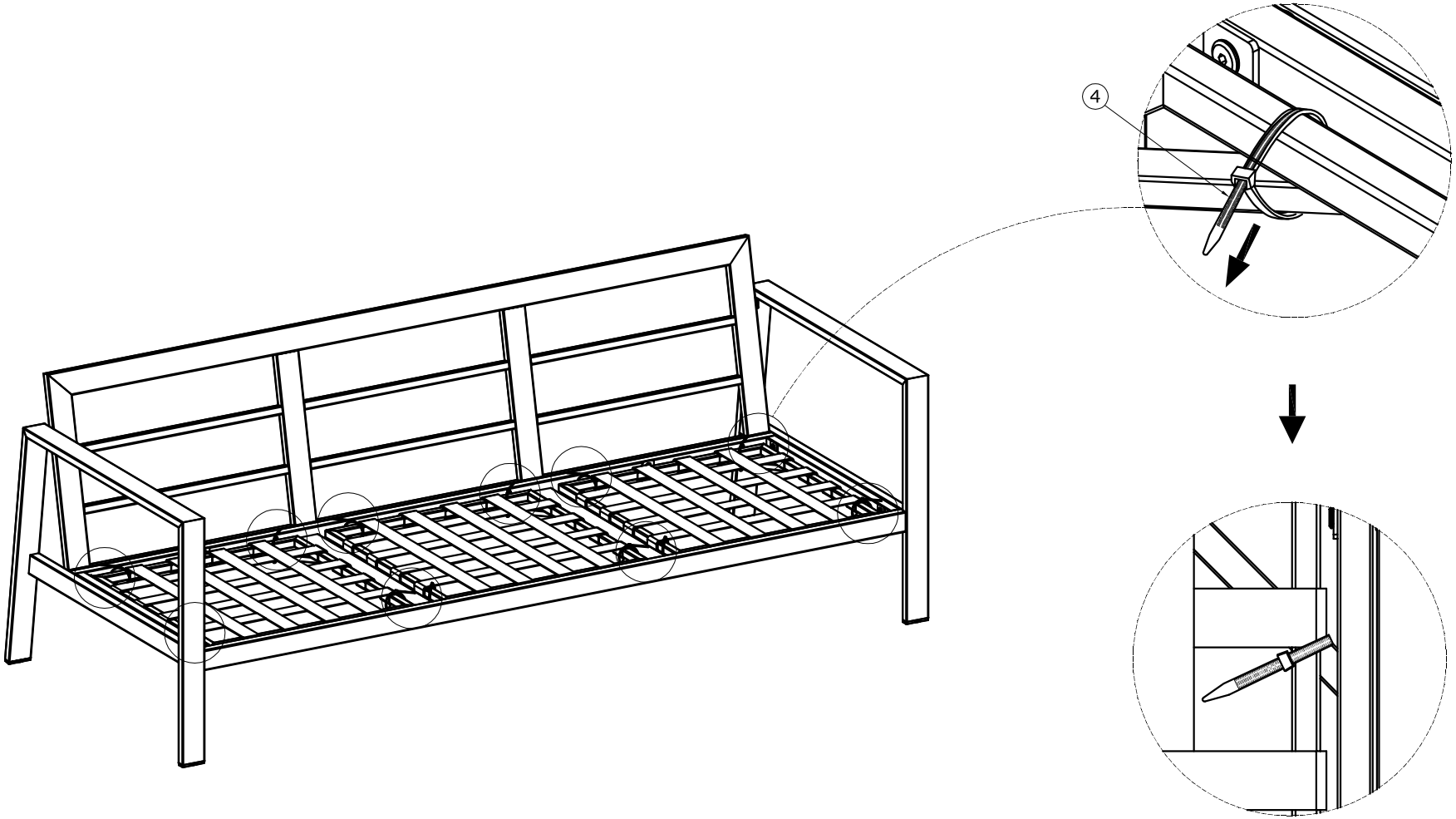
4

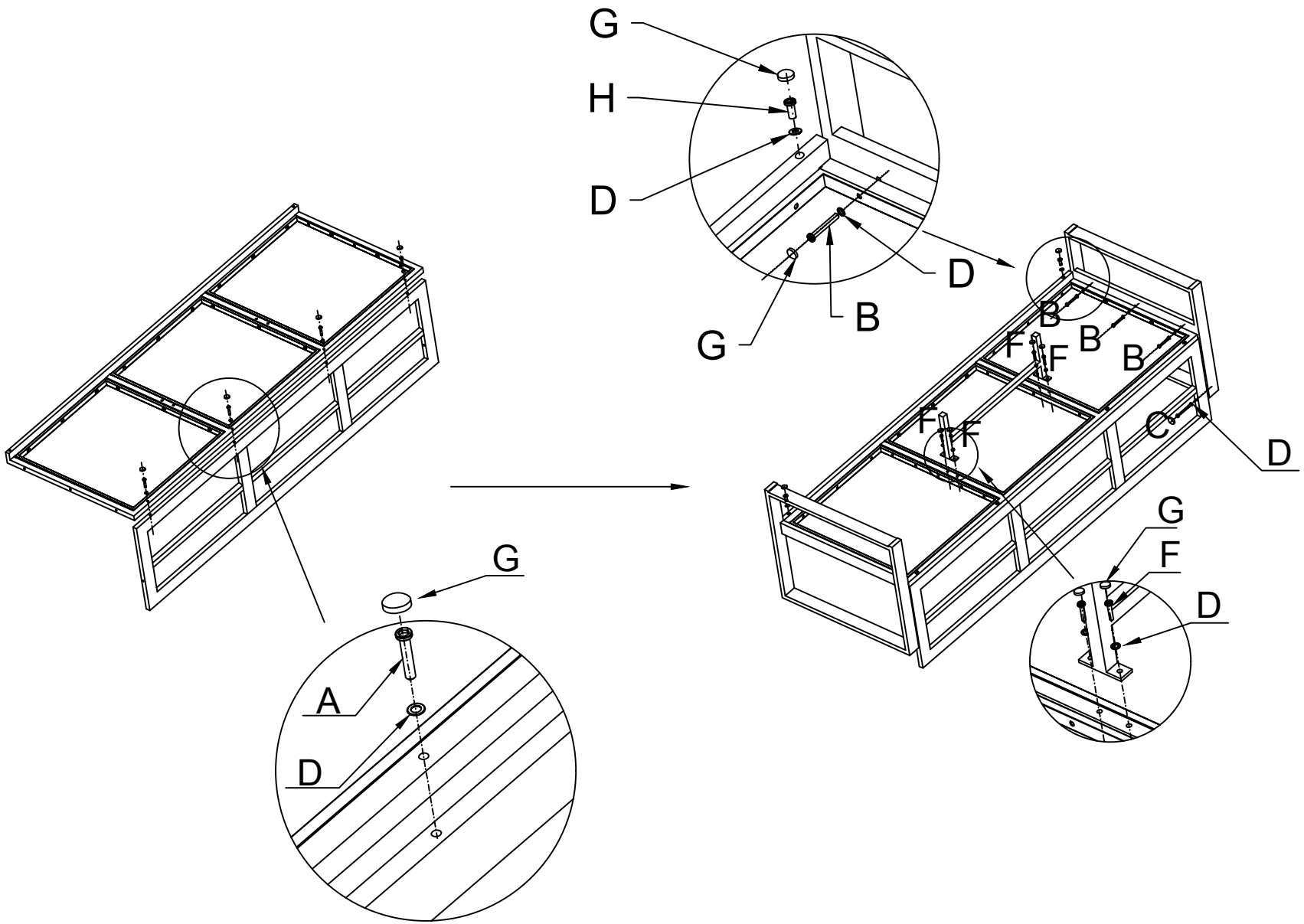

A	40mm BOLT X 4
B	55mm BOLT X 6
C	70mm BOLT X 2
D	WASHER X 18
E	SPANNER X 1
F	20mm BOLT X 4
G	BOLT CAP X 18
H	15mm BOLT X 2