ZFK038

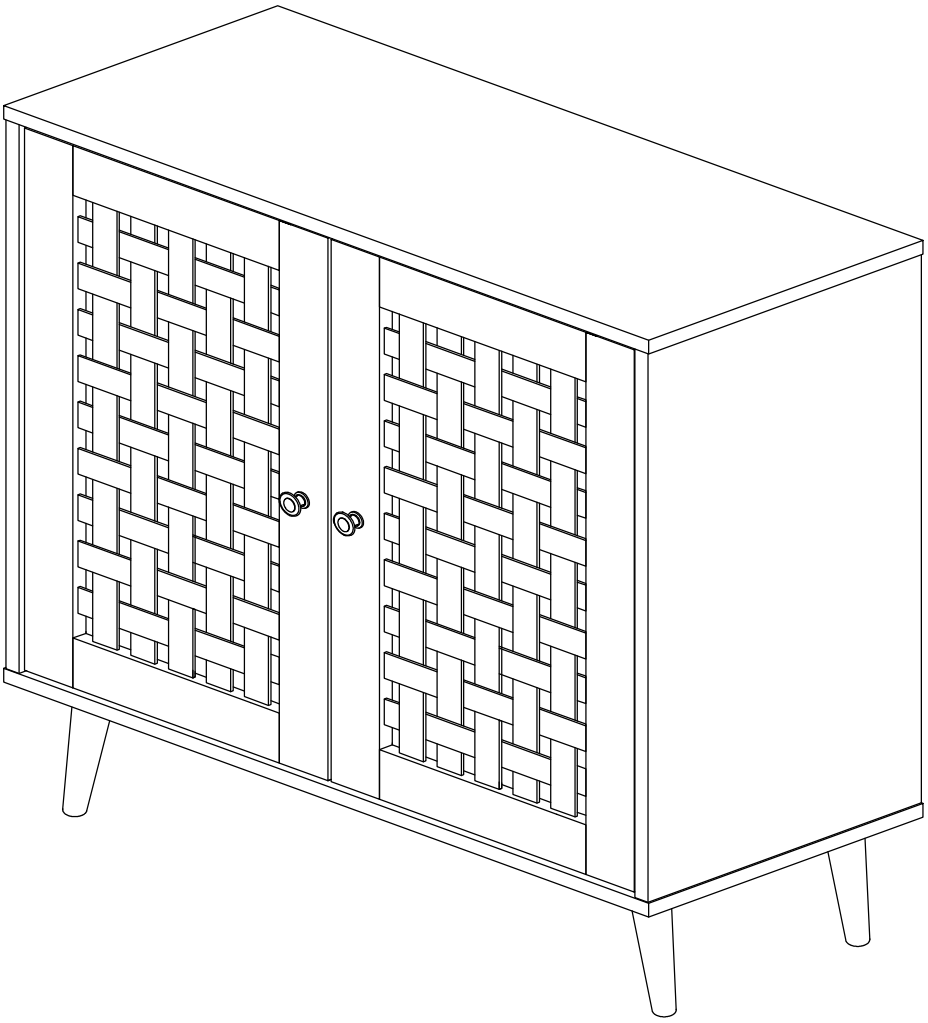

INSTRUCTION MANUAL

ASSEMBLY INSTRUCTIONS

Carefully unpack all the components and verify that all the necessary parts are included as listed in the packaging.

Identify each component and refer to the provided assembly diagram or step-by-step instructions.

Assemble the furniture in the order specified to ensure proper alignment and fit.

Use the provided tools or recommended tools for assembly. Do not use excessive force when tightening screws or bolts.

If any difficulties arise during assembly, consult the troubleshooting section or contact our customer support.

Tools Required



Wrench Tool



Wrench Tool

Board Parts List

NO.	PICTURE	QTY	NO.	PICTURE	QTY	NO.	PICTURE	QTY
1	 Bottom Panel	1	2	 Side Panel - Right	1	3	 Side Panel - Left	1
4	 Top Panel	1	5	 Back Panel	2	6	 Shelf Panel	2
7	 Door L/R	2	8	 Wooden Leg - Slope	4			

Hardware Parts List

NO.	PICTURE	QTY	NO.	PICTURE	QTY	NO.	PICTURE	QTY
A	A1  Minifix Nut	4	A	A2  Minifix Bolt	4	A	A3  Sticker - 22MM	4

ASSEMBLY INSTRUCTIONS

Hardware Parts List

NO.	PICTURE	QTY	NO.	PICTURE	QTY	NO.	PICTURE	QTY
A5	A5₁ 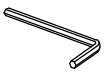 Allen Key - M4	1	A5	A5₂ 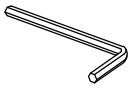 Allen Key - M5	1	B	 Wood Dowel - M8x25MM	8
C	 CB Screw - M4x45MM	4	D	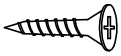 CB Screw - M3.5x16MM	42	E	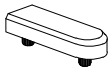 2 Pin Stopper	2
F	 Metal Shelf Support	8	H	 Hinges 7/8	4	I	 JCBB Bolt - M8x40MM	4
J	J1  Metal Handle 227	2	J	J2  Handle Screw - M4x19MM	2	L	 Foot Pad - 22MM	4

Board Parts List (Explode View)

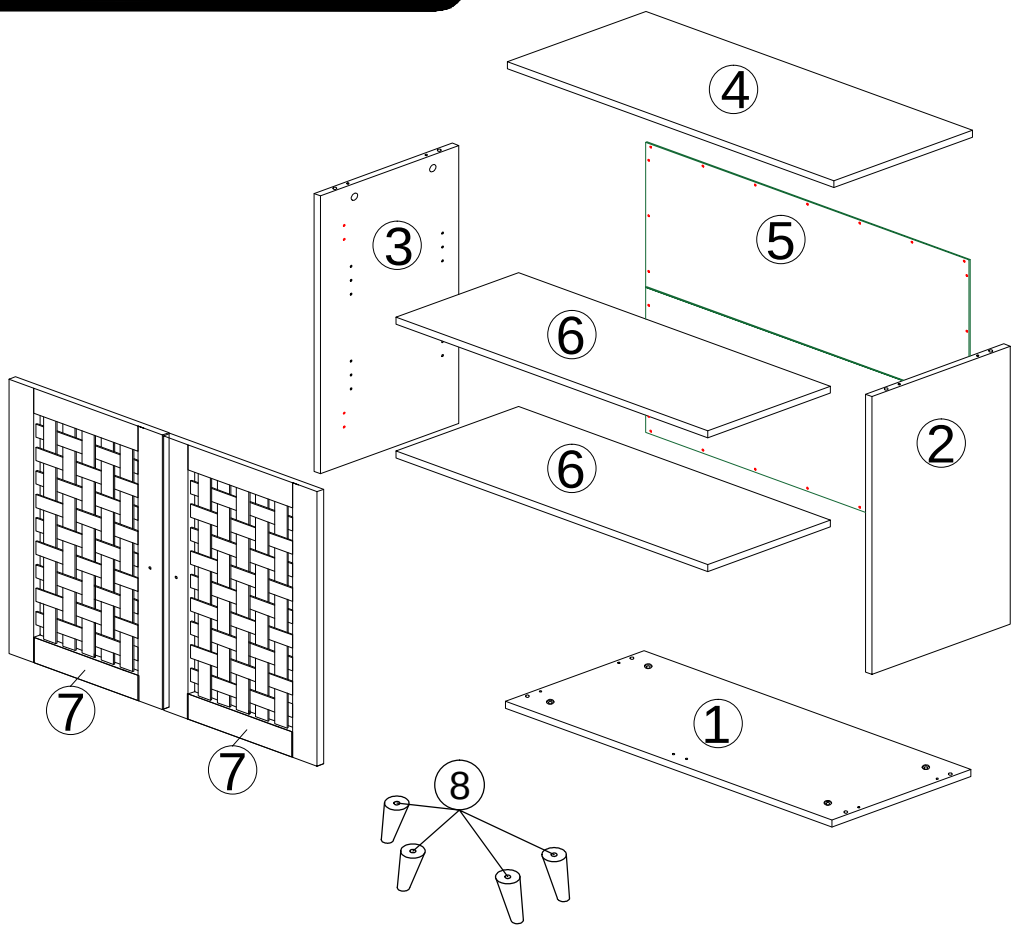

ASSEMBLY INSTRUCTIONS

STEP 1

Wood Dowel - M8x25MM	
B	X8

Shelf Support	
F	X8

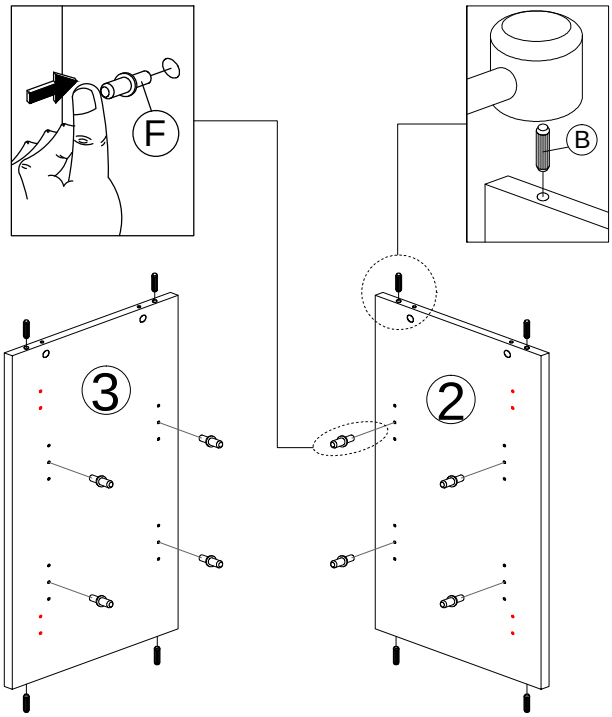

Insert hardware **B** into panel **2** and **3**. Then put hardware **F** into the front side panels **2** and **3**.

STEP 2

Minifix Bolt	
A2	X4

2 Pin Stopper	
E	X2

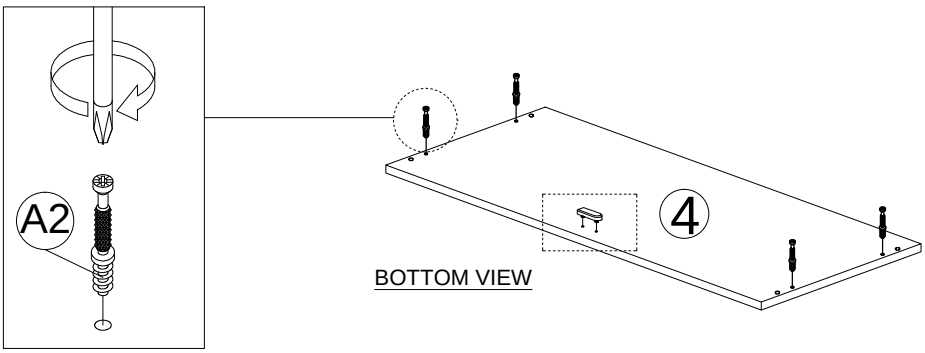

Fix hardware **A2** into bottom of panel **4**. Insert hardware **E** into panel **1** and bottom of panel **4**.

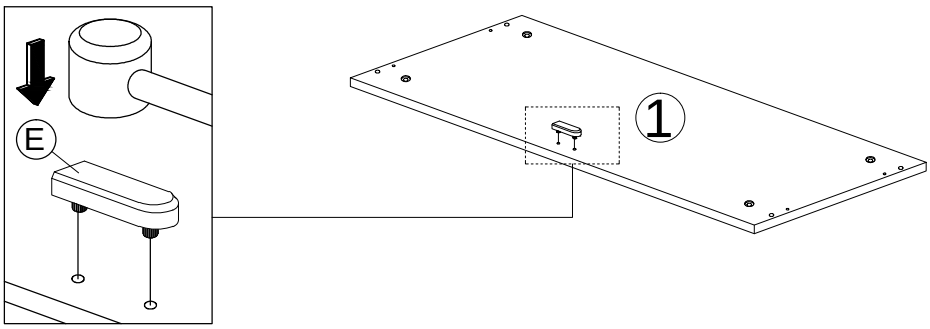

STEP 3

Allen Key - M5	
A5₂	X1

JCBB Bolt - M8x40MM	
I	X4

Foot Pad - 22MM	
L	X4

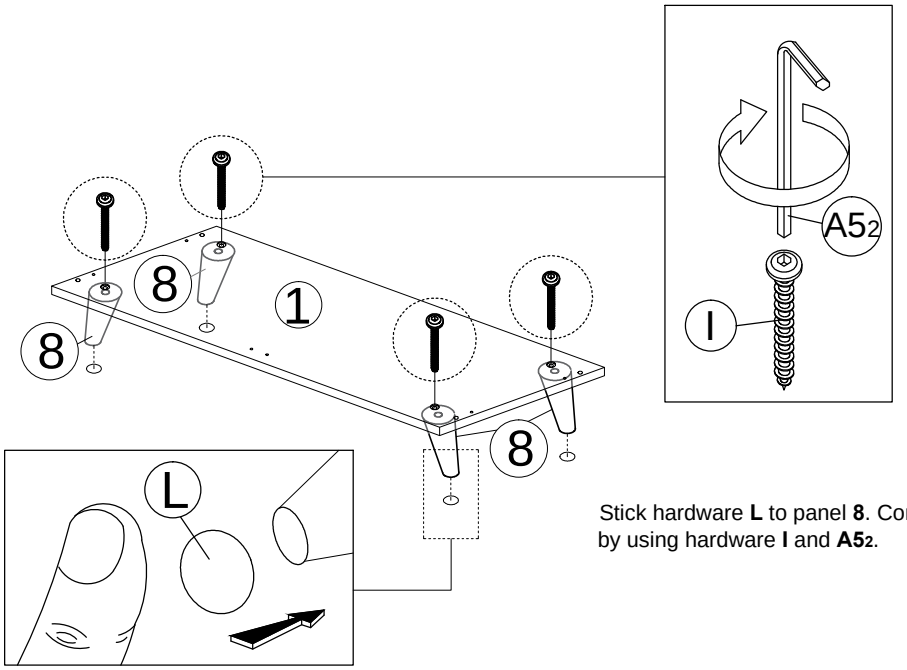

Stick hardware **L** to panel **8**. Connect panel **8** to panel **1** by using hardware **I** and **A5₂**.

STEP 4

CB Screw - M4x45MM	
C	X4

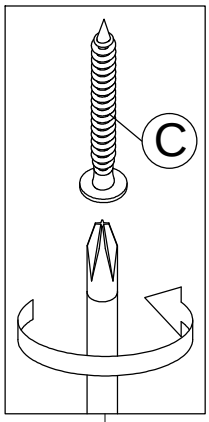

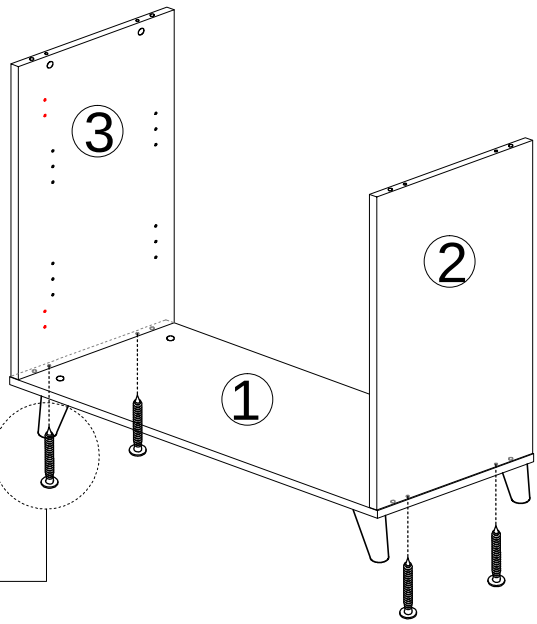

Connect panel **1** to panels **2** and **3** using hardware **C** and tighten it.

STEP 5

Minifix Nut	
A1	X4

Sticker - 22MM	
A3	X4

Allen Key - M4	
A5$_1$	X1

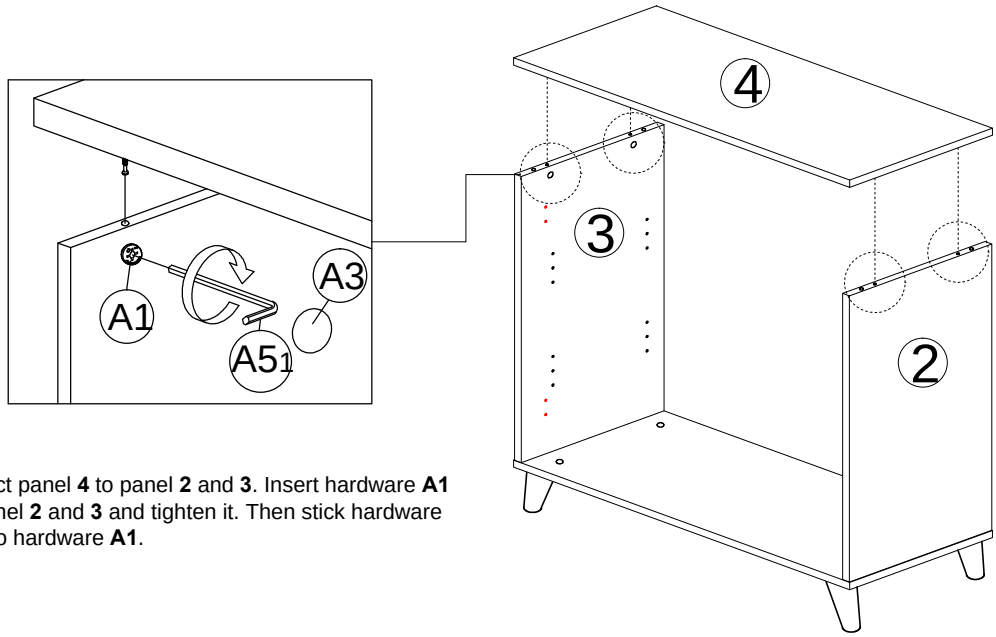

Connect panel **4** to panel **2** and **3**. Insert hardware **A1** into panel **2** and **3** and tighten it. Then stick hardware **A3** onto hardware **A1**.

STEP 6

CB Screw - M3.5x16MM	
D	X26

Screw hardware **D** to the back of panel **5**.

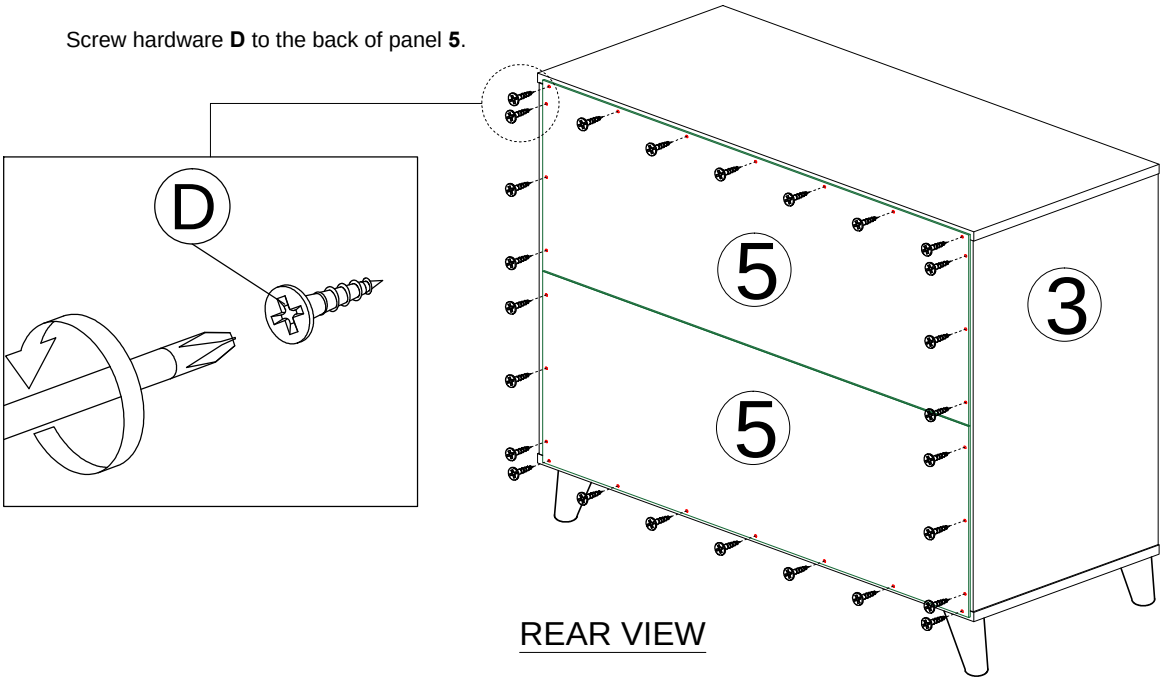

REAR VIEW

STEP 7

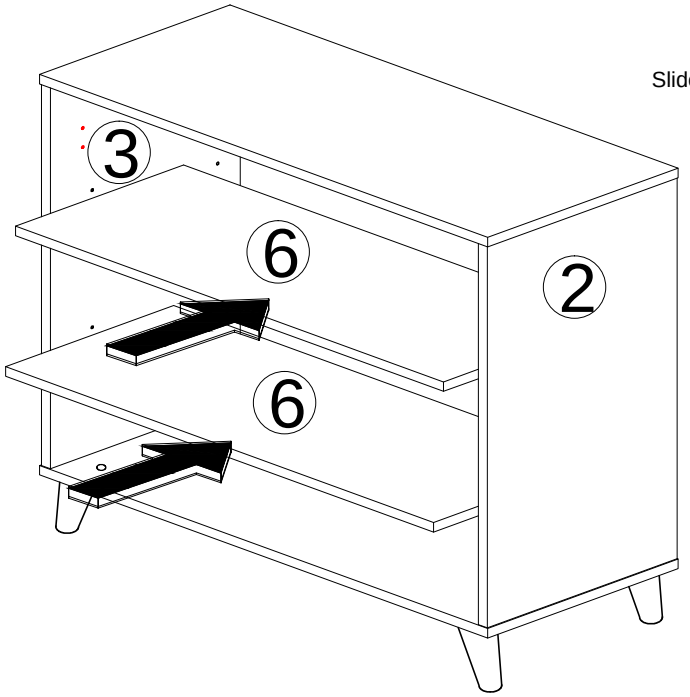

Slide in panel **6** in between panel **2** and **3**.

STEP 8

CB Screw - M3.5x16MM	
D	X8

Hinges 7/8	
H	X4

Metal Handle 227	
J1	X2

Handle screw - M4x19MM	
J2	X2

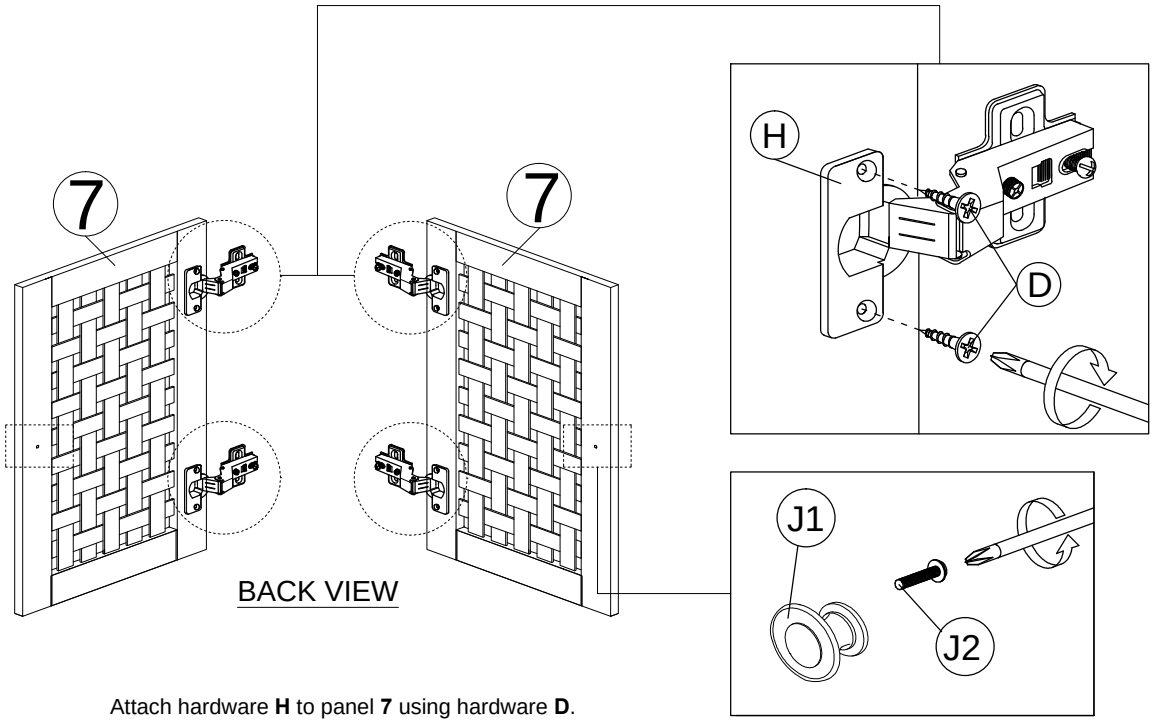

Attach hardware **H** to panel **7** using hardware **D**.
Fix hardware **J1** to panel **7** using hardware **J2**.

STEP 9

CB Screw - M3.5x16MM	
D	X8

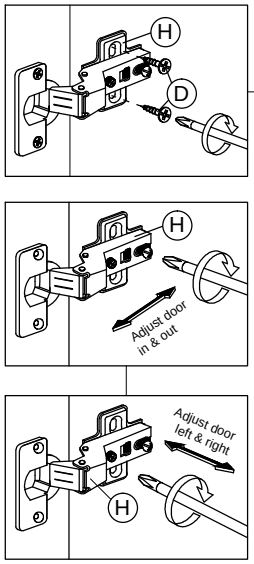

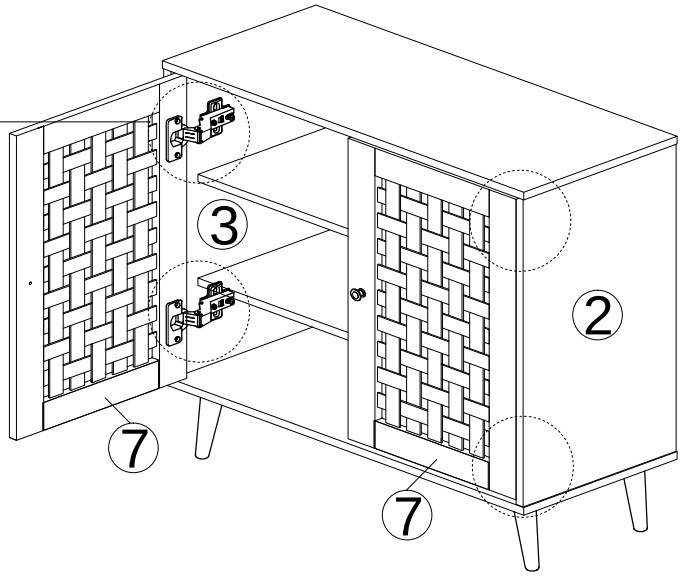

Connect panel **7** to panels **2** and **3** by using hardware **H** and **D,** then tighten it.

STEP 10

CB Screw - M3.5x16MM	
M1	X2

CB Screw - M4x38MM	
M2	X2

Anti-Tipping Bracket	
M3	X4

Anti-Tipping Strap	
M4	X2

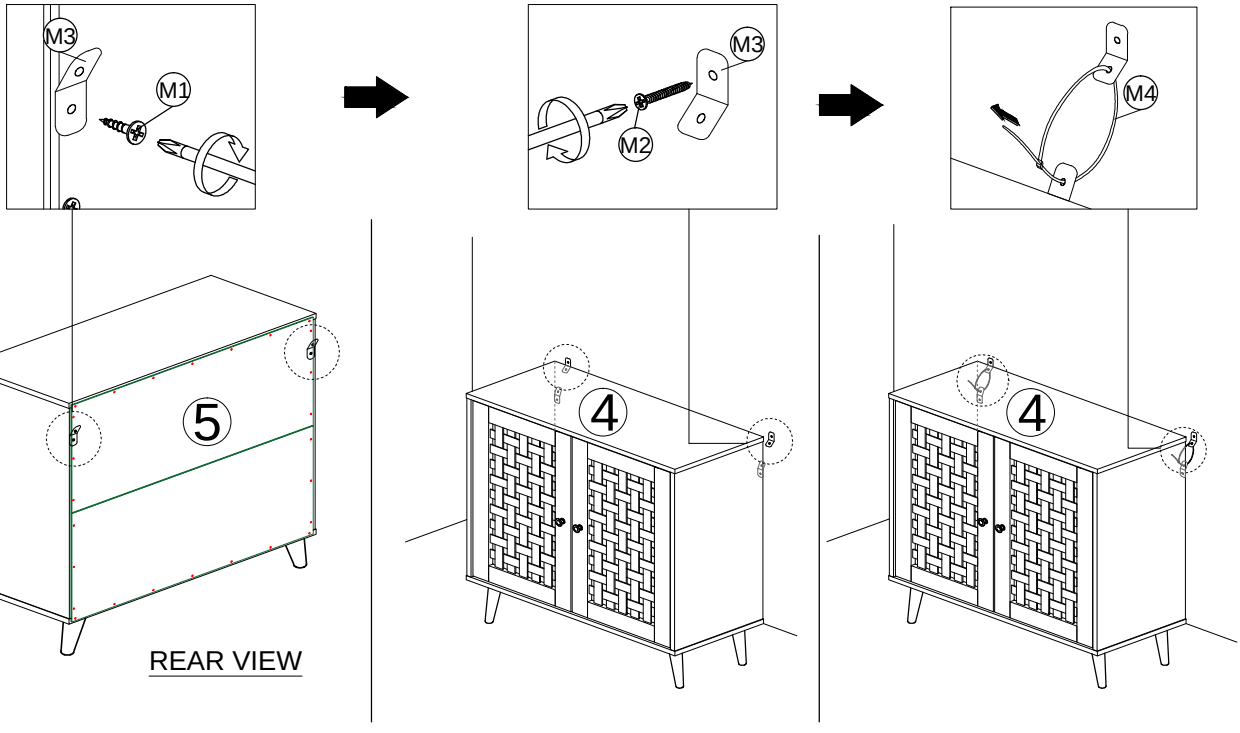

MAINTENANCE AND CARE

Clean regularly using a soft brush or vacuum with a brush attachment. Avoid harsh chemicals or abrasive cleaners.

Wash with a hose or pressure washer on a low-pressure setting for heavy soiling. Rinse thoroughly afterward.

Ensure proper drying after cleaning or exposure to rain to prevent mold or mildew growth.

Protect from extreme weather by moving furniture to a covered area or using furniture covers or tarps.

Avoid dragging or placing heavy objects on the furniture to prevent damage.

Apply UV protection spray or furniture wax to prevent fading and damage from the sun.

Regularly inspect for wear, loose strands, or damage and address issues promptly.

WARRANTY INFORMATION

Warranty Coverage: Our warranty provides protection against manufacturing defects in materials and workmanship for a specified period from the date of purchase, as outlined in the accompanying warranty documentation.

Exclusions: The warranty does not cover damages resulting from misuse, negligence, accidents, normal wear and tear, unauthorized repairs or modifications, improper assembly, or failure to adhere to the care and maintenance guidelines provided.

Warranty Claim Process

To initiate a return on Amazon, please follow these steps:

1. Log into your Amazon account and go to the "Your Orders" section.
2. Locate the order containing the item you wish to return.
3. Contact our customer service for assistance in obtaining a prepaid return label.
4. Once you receive the return label, securely affix it to the package.
5. You can then choose to drop off the package at a designated carrier location or arrange for a pickup.
6. After we receive and inspect the returned product, we will initiate the refund process.
7. The refund will be credited back to the original payment method used during the purchase.
8. Typically, refunds are processed within 3-5 business days.



Contact Information

If you have any questions, concerns, or need assistance,
please reach out to our customer support team using the contact information provided below:

Customer Support Email

support@sunvivi.com