BD01
INSTRUCTION MANUAL

(626) 825-9868

CATALOG

Product Image.....1

Parts Listing.....2

Installation Notes.....4

Tools Required.....5

Installation Steps.....6

Safety Tips.....17

Trouble Shooting Guide.....18

Customer Service.....19

BD01

Accessories corresponding position diagram

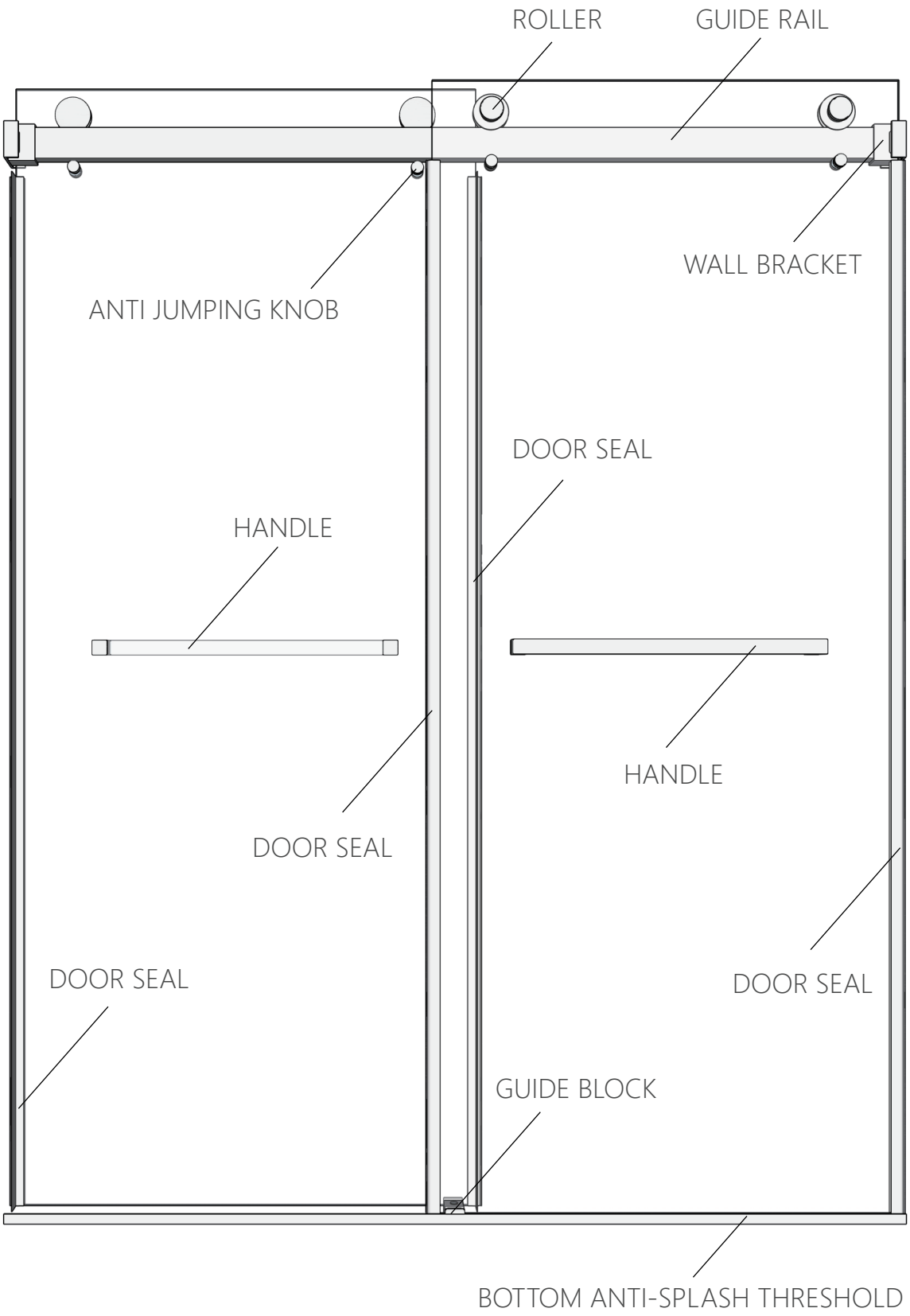

BD01
PARTS LISTING

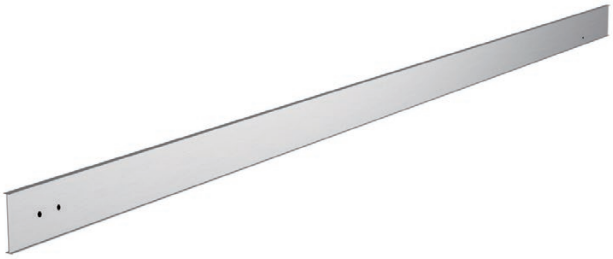

Aluminum punch template x 1

(If missing or broken, please refer to page 8 for punch data.)



Sliding door x 2



Guide Rail x 1



Door Seal x 4

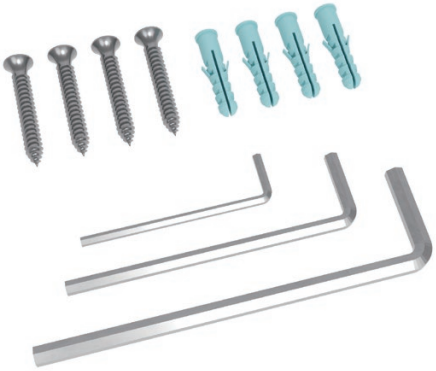

Screw & Allen key



Anti-Splash Threshold x1

BD01
PARTS LISTING



Wall Bracket x 2



Anti Collision Block x 4



Roller x 4



Anti Jumping Knob x 4



Towel bar / handle on sliding door x 2



Guide Block x 1

NOTES BEFORE
INSTALLATION

I. Prepare the tools. (Please refer to page 6)

2. All the measurements and installation should do after the tile finish.

3. Make sure shower base is horizontal and both wall are vertical, if shower base not horizontal or the wall not vertical, please contact our installation support.

4. Understand the names and uses of individual accessories of shower door.(Please refer to page 2~3)

5. Installation by licensed professional contractor is recommended.

6. Please watch the installation video or call us for installation support.

(Link:https://www.youtube.com/@showerdoorfactory)

7. To stretch width or cut the guide rail, Please contact us first to get installation support.

8. The plastic protectors on the glass corner cant move till all the installation steps finished.

9. It's better to repenish some glass glue at the tile wall seams to avoid leakage after the installation is completed.

TOOLS REQUIRED
(Please bring your own tools)

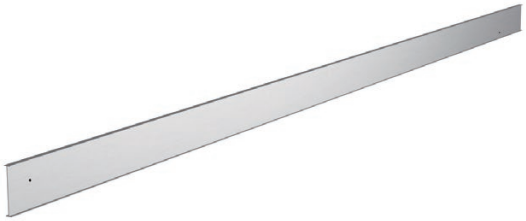

Aluminum punch template
(we offer)



Rubber hammer



Spirit level



Power drill



Screw driver



Tape measure



Pencil



Hacksaw



Silicone Gun
Modified Silane(Silyl) Polymer



Drill Bits 5/16"

INSTALLATION
STEPS

Support
showerdoorservice@gmail.com
(626) 825-9868

Measuring

Punching

Wall bracket

Guide rail

Roller

Glass

Glass guide block

Handle

Door seal

Bottom anti-splash threshold

Gluing

INSTALLATION / **STEP 1**

According to the assigned aluminum punching template (please measure with horizontal ruler), draw the punching point position after ensuring the slope value.

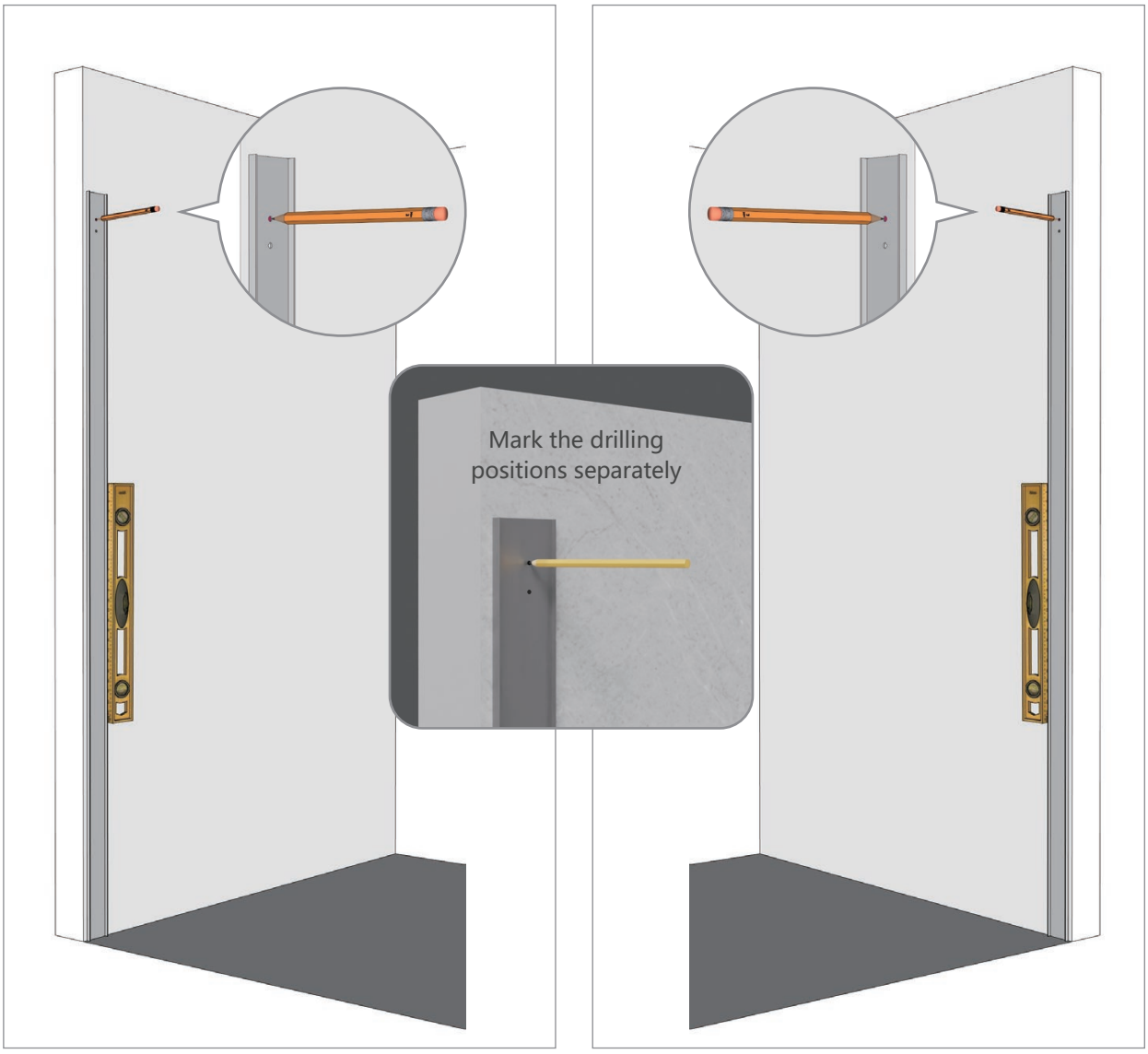

Left-opening

Right-opening

INSTALLATION / **STEP 2**

Drill the holes according to the drawn holes, making sure that there is no offset of the holes. The drilling positions of the left and right walls need to be in alignment and on the same horizontal and vertical plane. The vertical surface of wall bracket drilling position is 1 5/8" away from exterior vertical surface of your threshold.

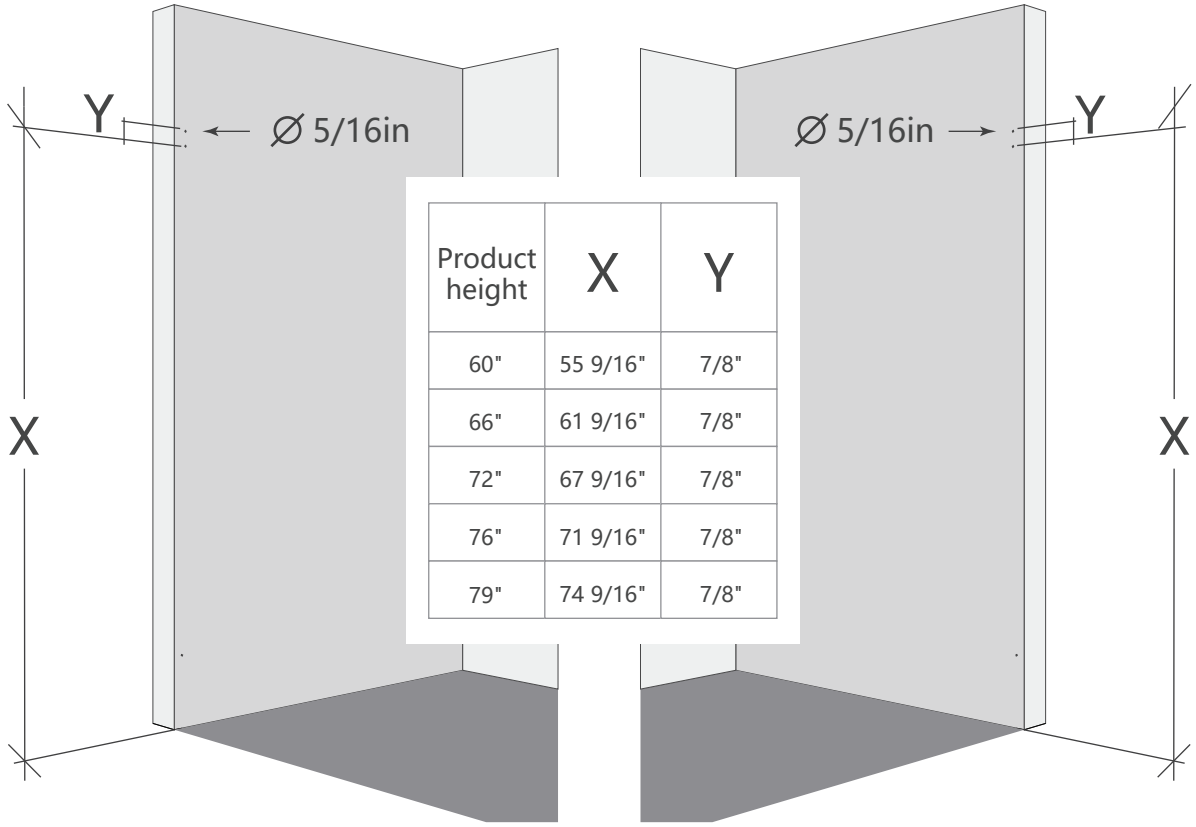

Product height	X	Y
60"	55 9/16"	7/8"
66"	61 9/16"	7/8"
72"	67 9/16"	7/8"
76"	71 9/16"	7/8"
79"	74 9/16"	7/8"

Same wall bracket punching data for both walls



Drill holes at
the marked locations

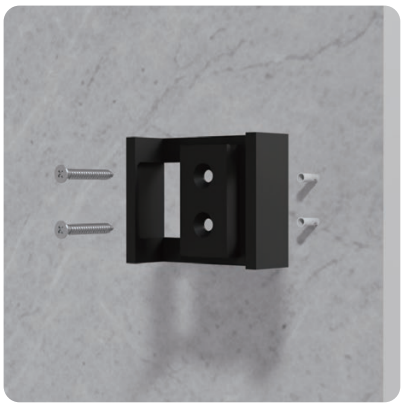

Install the
firmware separately



Install the
firmware separately

INSTALLATION / **STEP 3**

If the guide rail need to be cut to match your shower opening please do it based on actual measurements. if stretch the product installation width please adjusting the insertion depth of the wall bracket to the guide rail without cutting the guide rail. BD01 has maximum installation width stretch of 1" for each size.

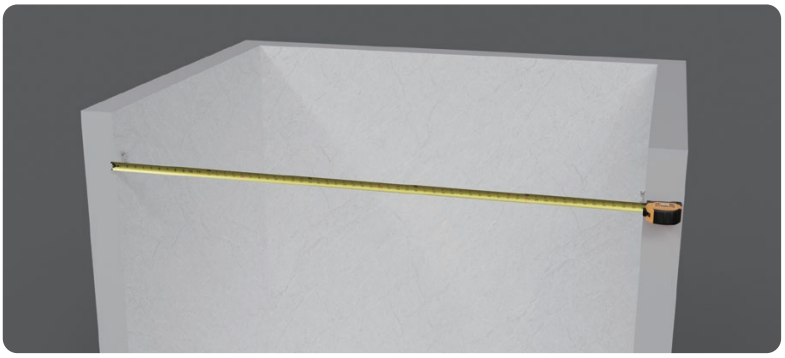

1/ Measure the distance between two Wall Brackets

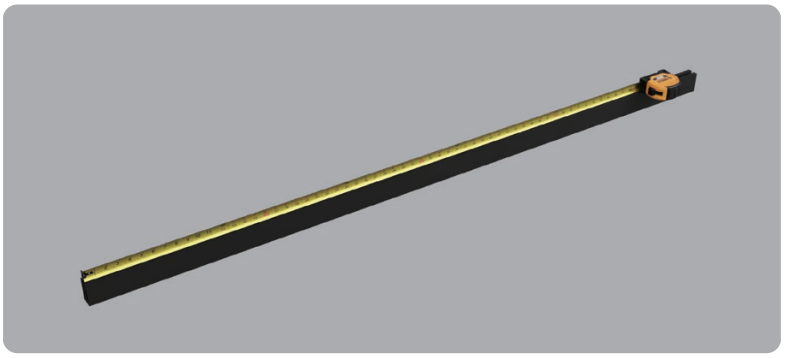

2/ Measure the length of the Guide Rail to match the distance between the two Wall Brackets.

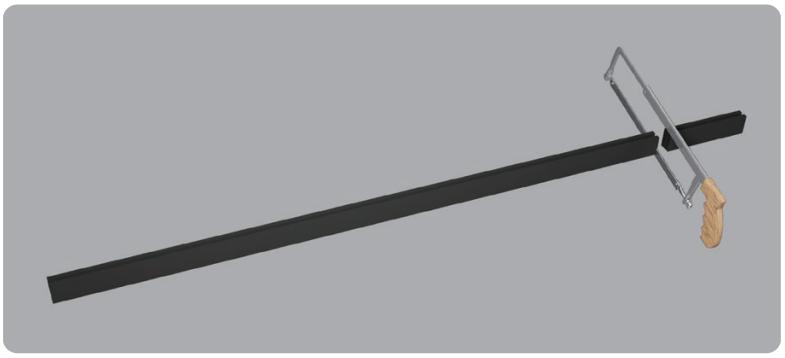

3/ Cut the Guide Rail to your measurements.

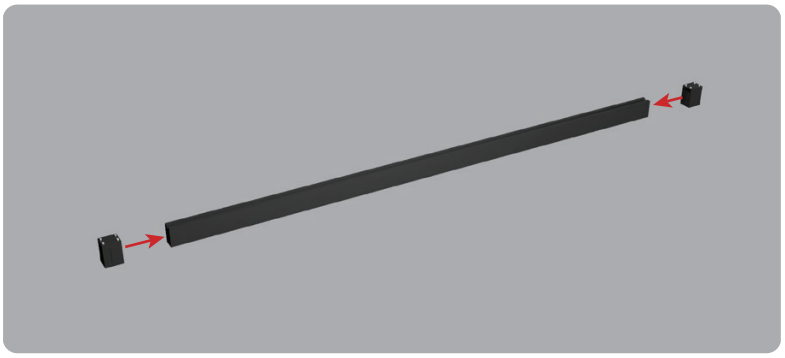

4/ Place the 2 wall brackets into the Guide Rail

INSTALLATION / **STEP 4**

After the installation of the guide rail, please use the level ruler to measure whether the level.

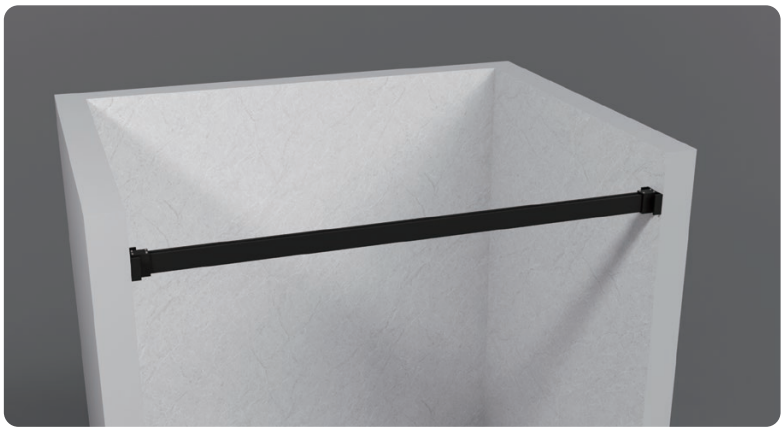

1/ Secure both ends of the track to the wall brackets.



2/ Tighten the screws

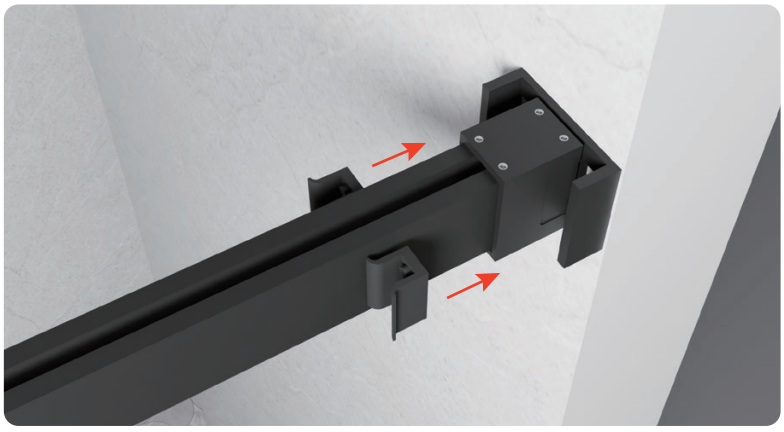

3/ Install bumper blocks on both sides

INSTALLATION / **STEP 5**

After installing the rollers, hang the door on the guide rail. Installation of sliding glass: The height and level of the glass can be adjusted slightly by adjusting the rollers, through this adjustment can be adapted to the shower with a little wall offset, each wall offset preferably not more than 1/4".

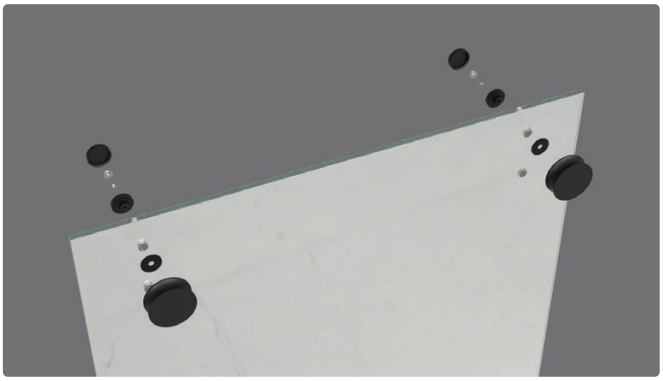

1/ Installing a Roller for Sliding Glass Doors

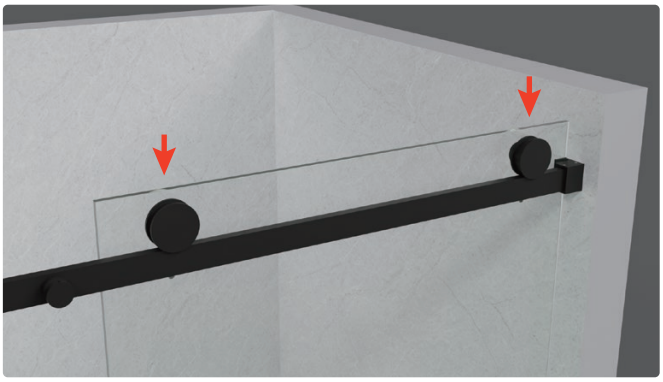

2/ Hang the door on the track and use a level to confirm it is perfectly straight.

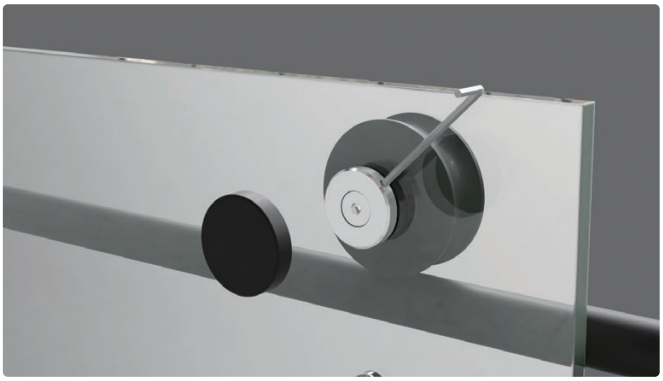

3/ Adjust the eccentric rollers to align the sliding door with the walls.

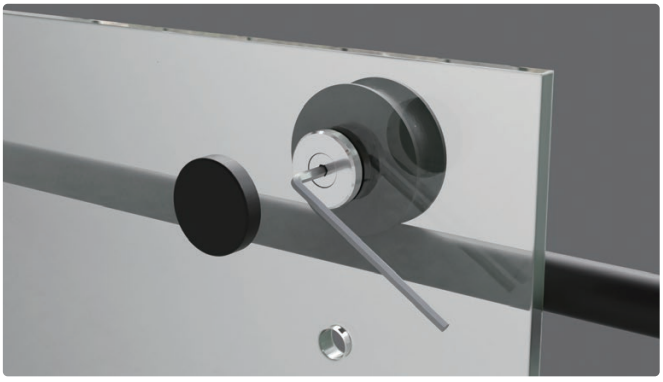

4/ Tighten the rollers to secure all components.

INSTALLATION / **STEP 6**

After the glass installation is completed, please measure the glass with level ruler to confirm the vertical and horizontal of the glass and then install the glass guide block.



1/ Measure and install in the middle

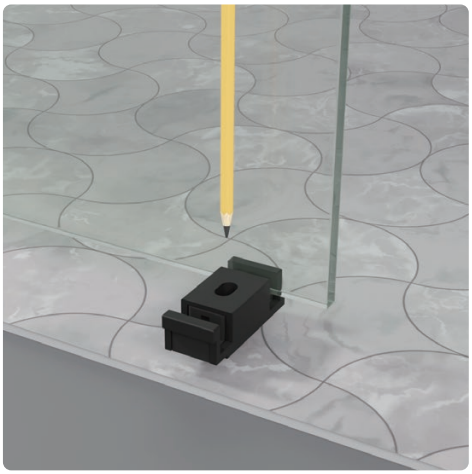

2/ Marking drilling locations



3/ Drill holes at marked locations

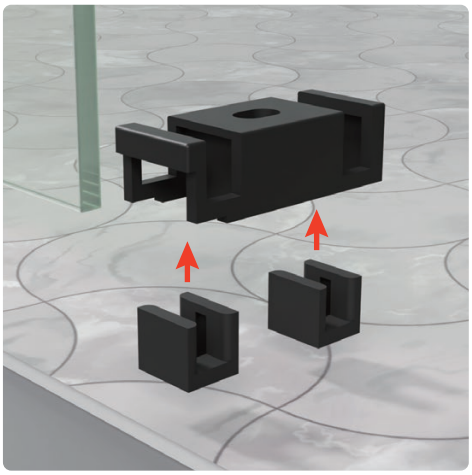

4/ Place the 2 Protective pad into the guide block

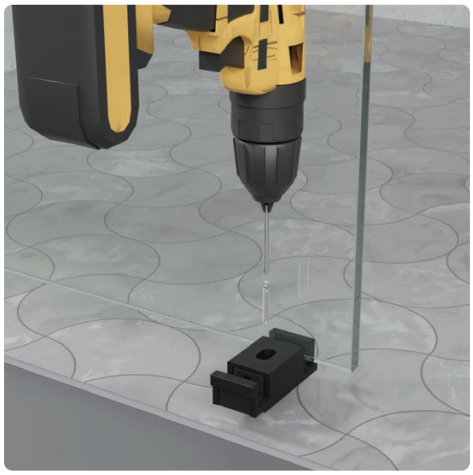

5/ Fix the glass guide block with screw

INSTALLATION / **STEP 7**

Please follow the guide to install the anti-jumping knobs. Anti-jumping knobs do not completely close to the guide rail, need leave slight gap to avoid sliding unsmooth.

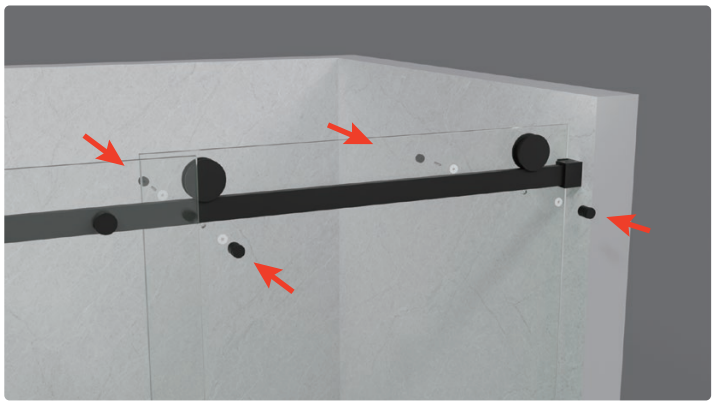

1/ Installing the Anti Jumping Knob of a sliding glass door

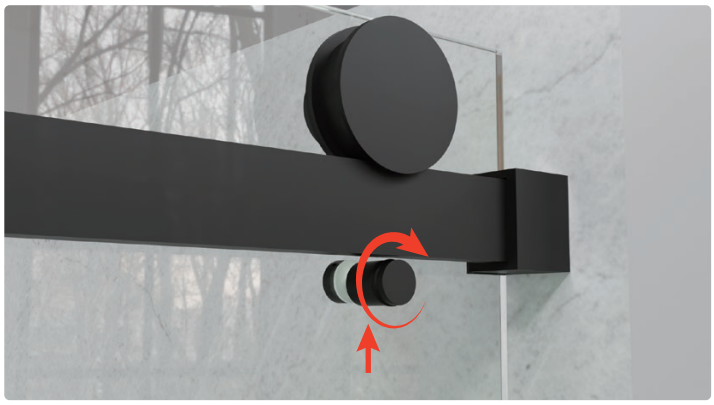

2/ Adjusting the Anti Jumping Knob

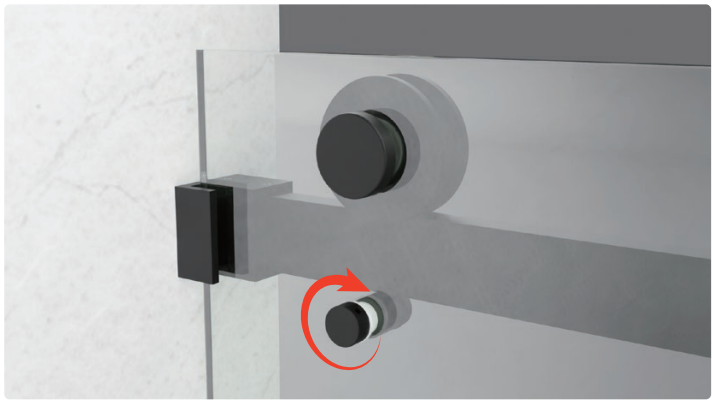

3/ Tighten the Anti Jumping Knob to secure components.

INSTALLATION / **STEP 8**

Follow the guidelines to install the handles and towel bar.

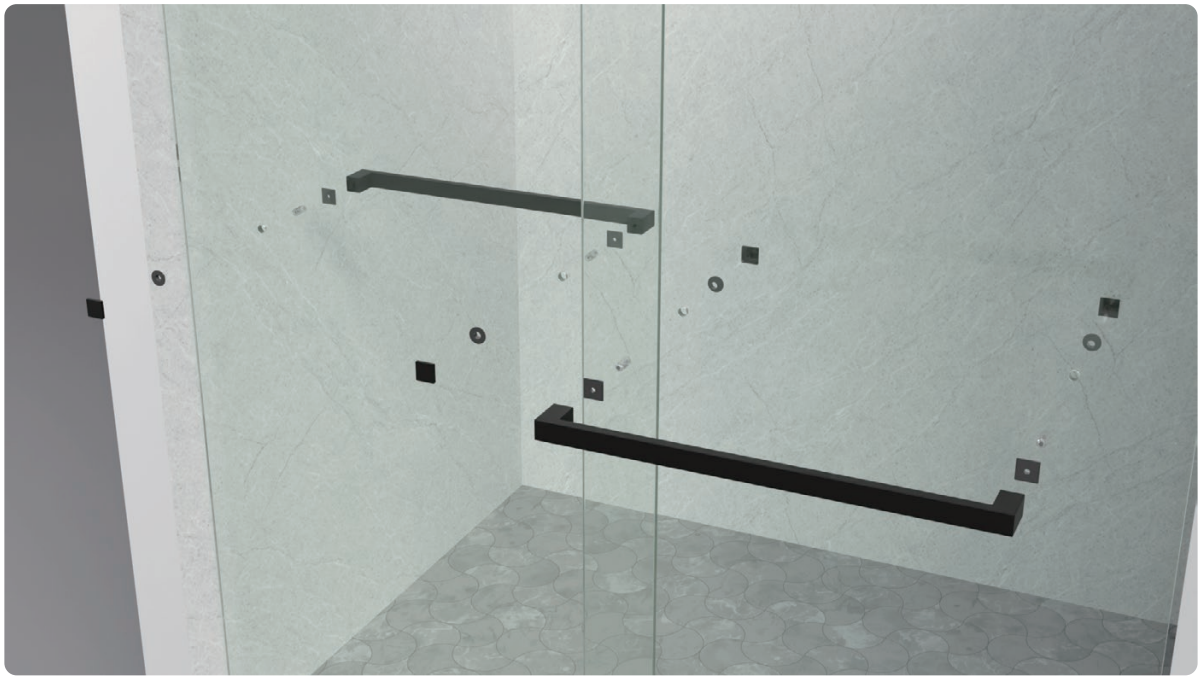

1/ install the handle / towel bar.

Customer Service: (626) 825-9868

Email: showerdoorservice@gmail.com

INSTALLATION / **STEP 9**

Install the anti-splash threshold according to the guidelines, please cut to the right size according to the width of your shower opening. Clean up the garbage and dry the water and stains with a soft cloth after installation, then applying the glass glue.

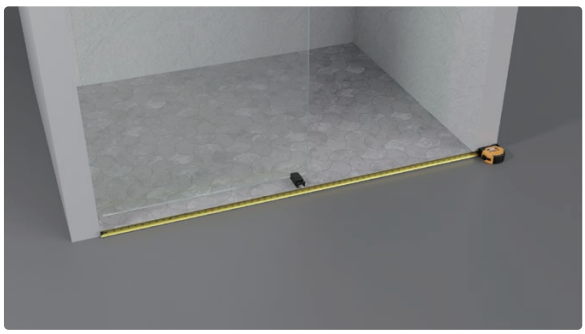

1/ Measure the required length

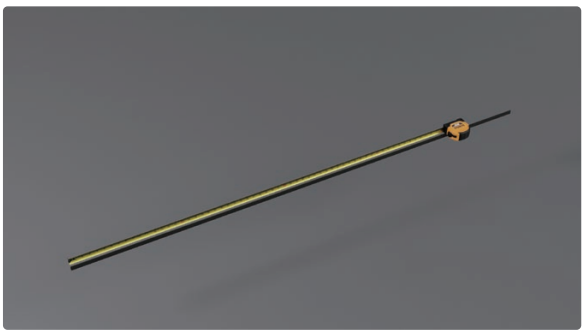

2/ For the water dam

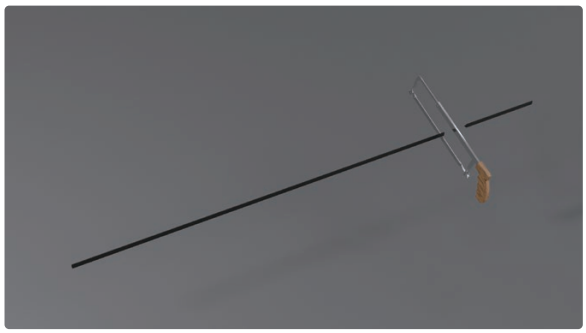

3/ Cut it to size

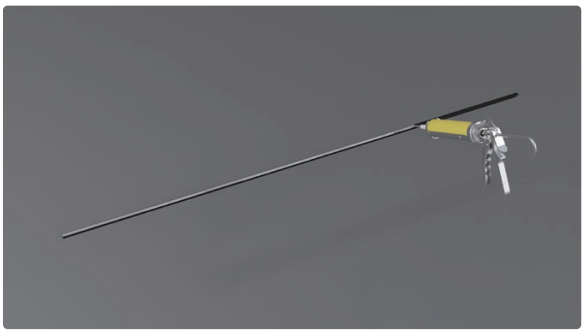

4/ Using silicone sealant.

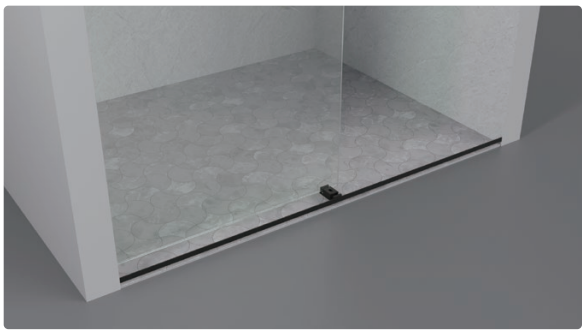

5/ And attach it to the floor

Note: Please dry for 24 hours after the glass glue is applied before use.

INSTALLATION / **STEP 10**

The door seal can be installed according to your preference, but you need to ensure that there is minimum a wide door seal in the middle when you shower, The top of wide door seal needs to be slightly lower than the bottom of anti-jump knobs to avoid scraping. All door seals should be installed starting from the bottom and working upwards.

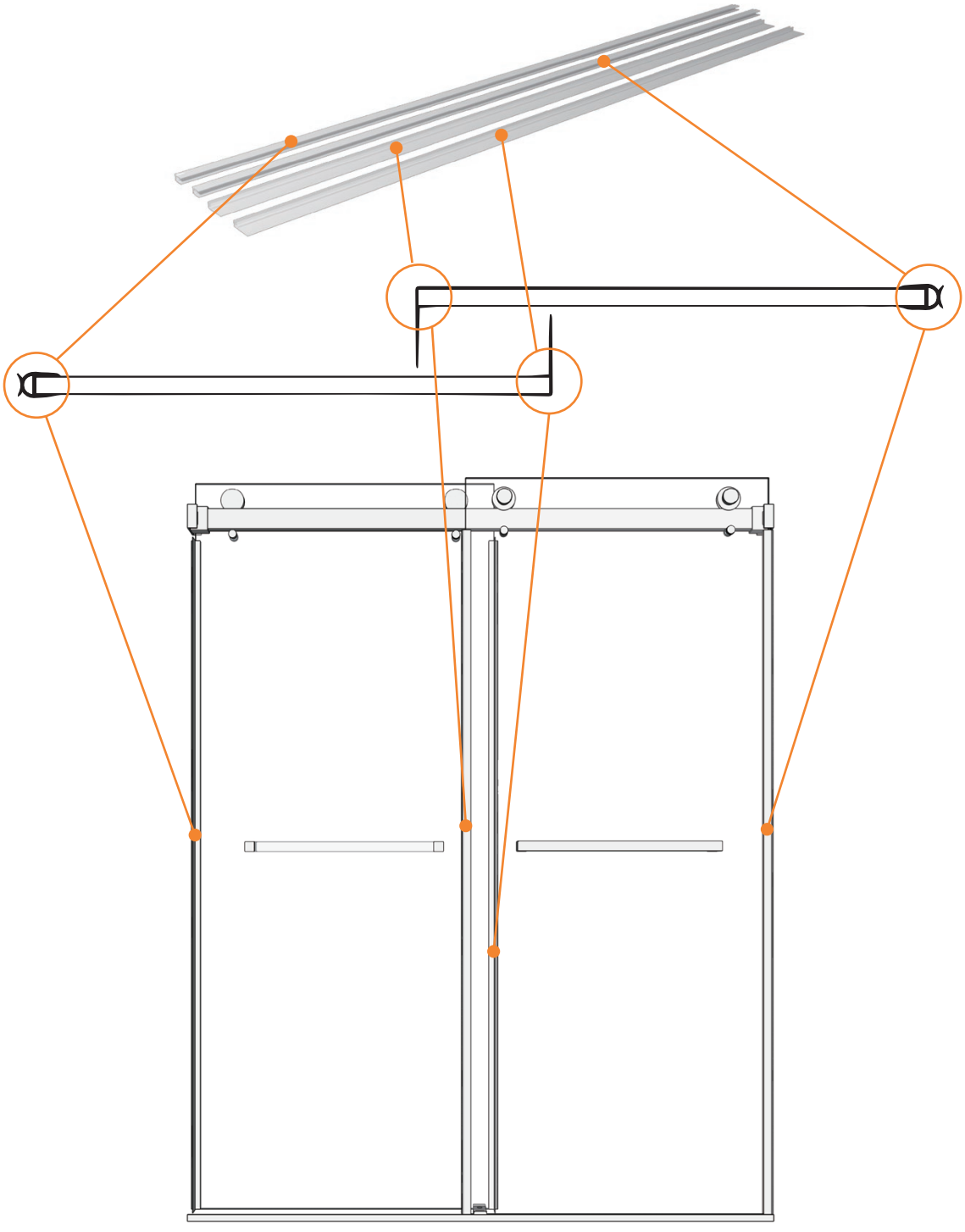

SAFETY TIPS

1. Do not remove the slide glass protection corners during installation, remove them only after installation is complete.

2. Wear protective equipment when drilling, cutting guide rail and anti-splash threshold.

3. Careful installation of the glass is required during installation, please do not step on the glass to avoid bumping.

.4. Wait 24 hours after installation before using the shower.

MAINTENANCE AND CARE:

1. Shower door glass is double-sided easy-clean glass. For daily cleaning using moist soft cloth to wipe away surface water and stains, reduce the use of cleaning agents to extend the easy-clean performance. It's recommended to use soft cloth to clean the residual water stains on the glass and hardware after shower. Silicone squeegee is available.

2. Do not use any sharp cleaning tools or cleaning agents with abrasive ingredients to clean the glass.

3. Caustic cleaners should not be used, such as alcohol. Long-term use of corrosive cleaners will cause discoloration of the hardware. Reducing the use of cleaners will prolong the use of the hardware & glass appearance. You can use small amount of anhydrous ethanol or detergent to clean stubborn water stains or calculus on the hardware.

4. Do not let the shower water directly wash the bottom of slide door.

TROUBLE SHOOTING
GUIDE AND NOTE

Shower doors don't close tightly issues:

Q: When l close the door, the door closes then backs out and never closes tight. How should l do?

A: First please check that the anti collision block is installed on both sides, it will hold the glass in place when closing the door to keep it closed. Then use a level to check your guide rail and glass level status, if not installed level, you can adjust the top roller to adjust the sliding glass level and height. Even if your guide rail is a little tilted, the anti collision block will help to complete the closing action and hold the sliding glass, if guide rail is tilted severely, you may need to re-drill.

Shower door leaking issues:

Q1: The bottom of the inner door leaks, how should l do?

A1: Please confirm product wall bracket punching data are correct and the anti-splash threshold glue seals well without leaking, then following adjustment steps need to be made:

1. Adjust the angle of the shower head, avoid the shower water directly wash the bottom of the slide door.

2. Please adjust the height of the top roller to reduce the height of the glass.

Complete these 2 steps would solve it, if there still leak please contact customer service for support.

About Returns

Shower door leaking issues:

Please contact our customer service to confirm the return steps before returning or get order replacement.

Customer Service:

(626) 825-9868

Email:

showerdoorservice@gmail.com

Installation Video:

https://www.youtube.com/@showerdoorfactory