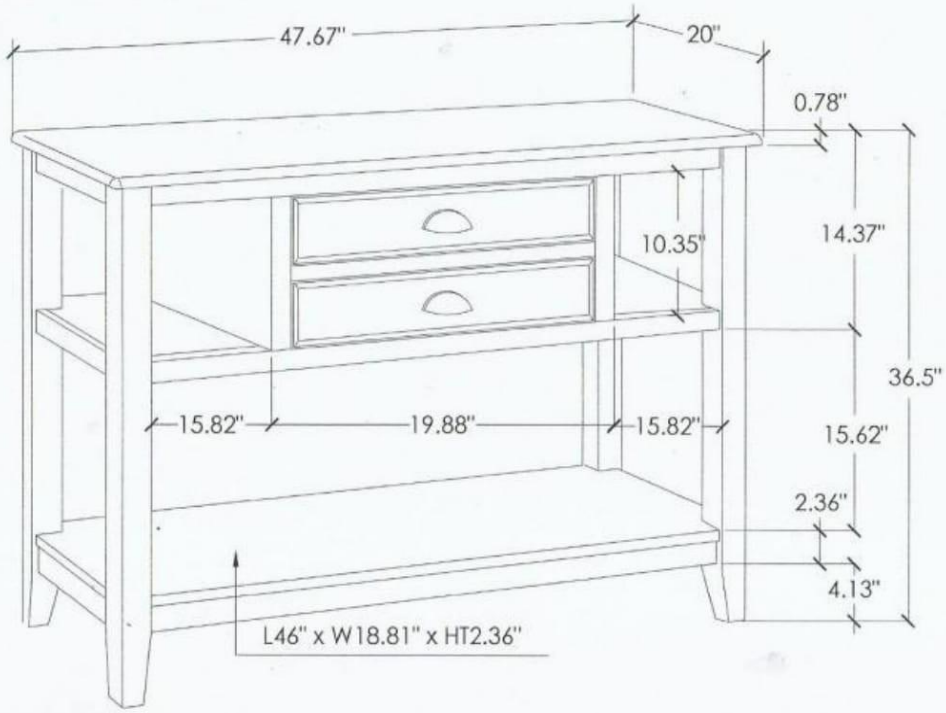
47.67"
20"
0.78"
10.35"
14.37"
36.5"
15.82"
19.88"
15.82"
15.62"
2.36"
4.13"
L46" x W18.81" x HT2.36"

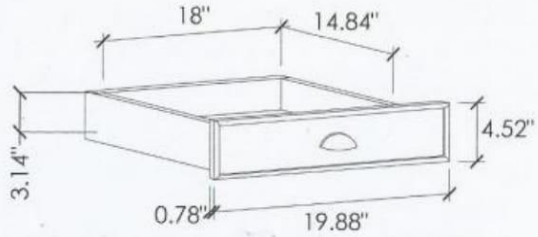
18"
14.84"
4.52"
3.14"
0.78"
19.88"