BUYING GUIDE

Six-drawer dresser

Check the room fit, compare drawer space and choose from four wood-tone finishes.



Shown in Golden Oak

Overall dimensions

Width
47.25″

Depth
15.75″

Height
30″

Will it fit your room?

Mark the footprint

Tape a 47.25" × 15.75" rectangle on the floor. Open nearby doors to check their swing. Allow for any gap behind the dresser caused by trim.

Check the height

If it will sit under a window, measure from the floor to the sill and compare with the 30" top.

Leave space in front

Wayfair suggests about 36" between the closed dresser and a bed or other furniture. Measure to the edge of the bed frame.

A bed-facing layout

Top view

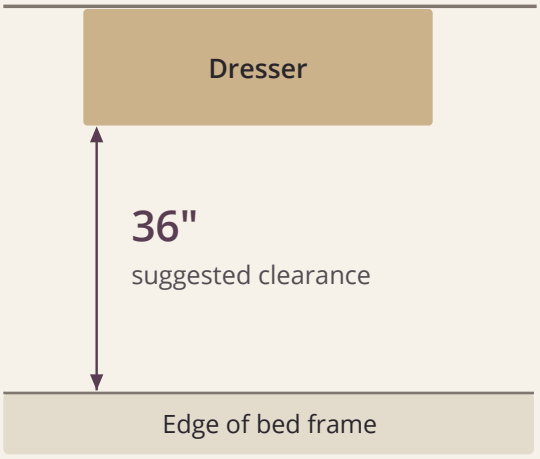

Room-planning reference Wayfair's dresser measurement guide

Storage & finishes

Compare your folded clothes with the inside of a drawer, then choose a finish for your room.

What fits in a drawer?

19" wide × 11" deep × 4" high inside each drawer

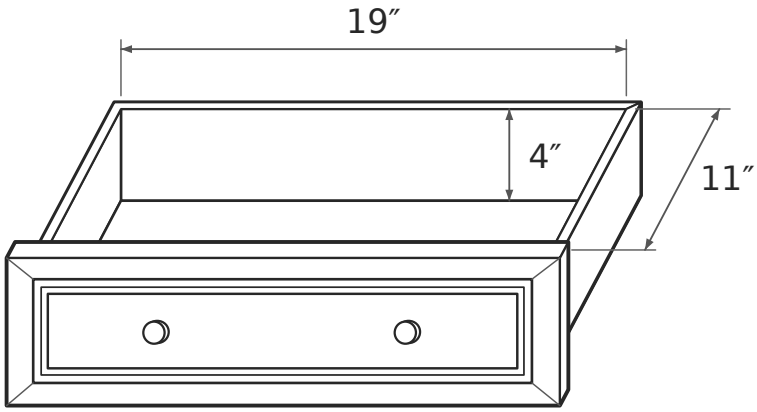

Try a test fold

Fold a favorite T-shirt and measure it. Compare the folded width and depth with the drawer base, then keep the stack below the 4" rim.

Shallow drawers suit socks, scarves and lightweight tees. For a bulky sweater, check whether a single folded layer fits below the rim.

Choose your finish

The same drawer-front detail is shown below for an easier color comparison.



Natural

Warm tan with amber tones.



Golden Oak

Wheat-gold with distinct grain.



Walnut

Rich brown with reddish undertones.



Espresso

Deep coffee brown with subtle grain.

To coordinate with a bed or nightstand, compare the warm or cool undertone in daylight. Room lighting and screen settings can affect how a finish appears.